RBM
FOR EFFICIENCY

2020

Everyone speaks about quality. We guarantee certified products.

Everybody talk about quality product, customer satisfaction. RBM certifies it. Marks "ICIM" & "IQNet" guarantee that our company works with a Quality System certified and that our components for hydrothermal systems are produced in accordance with high quality standard. We declare it, and our customers verify it every single day. In RBM future has already arrived. We are in the van of design of new products, production of components for hydrothermal systems, business management. Our increase ability anticipates technological innovation and uses it for new ideas and new products. We are proud of our success but we never stop. It would be... boring.

Tout le monde en parle, nous agissons.

Tout le monde parle de qualité du produit, de satisfaction du client, RBM les certifie. La marque "ICIM" et "IQNet" garantissent que nos composants pour systèmes hydrothermiques sont fabriqués suivant des critères de qualité supérieure, nos clients le constatent tous les jours. Chez RBM le futur est déjà là! Nous sommes à l'avant-garde dans la réalisation de produits nouveaux, dans la fabrication de composants pour systèmes hydriques et thermiques ainsi que dans la gestion d'entreprise. Grâce à notre capacité de développement, nous mettons les innovations technologiques à la disposition des idées et des produits nouveaux. Nous sommes orgueilleux de notre succès mais ne nous arrêtons pas ici, puisqu'il serait… monotone.

Все говорят. Мы делаем.

Все говорят о качестве продукции и об удовлетворении запросов клиента. RBM подтверждает это сертификатами. Сертификаты "ICIM" и "IQNet" гарантируют, что наши компоненты для систем отопления и водоснабжения являются продукцией, отвечающей наивысшим критериям качества. Мы это заявляем, а наши клиенты удостоверяются в этом каждый день. В RBM, будущее наступило давно. Мы впереди всех в проектировании и производстве новой продукции для систем отопления и водоснабжения, а также в корпоративном управлении. Наши технологические инновации стоят на службе новых идей и новой продукции. Мы гордимся нашим успехом, но мы никогда не останавливаемся на достигнутом. В противном случае стало бы….скучно.





1953 — *The business is set up in Lumezzane.*

1986 — *It is expanded and transferred to S.Giovanni Polaveno.*

2000 — *The new production site in Nave is added.*

2002 — *RBM Kilma is created.*

2004 — *RBM Metis is created.*

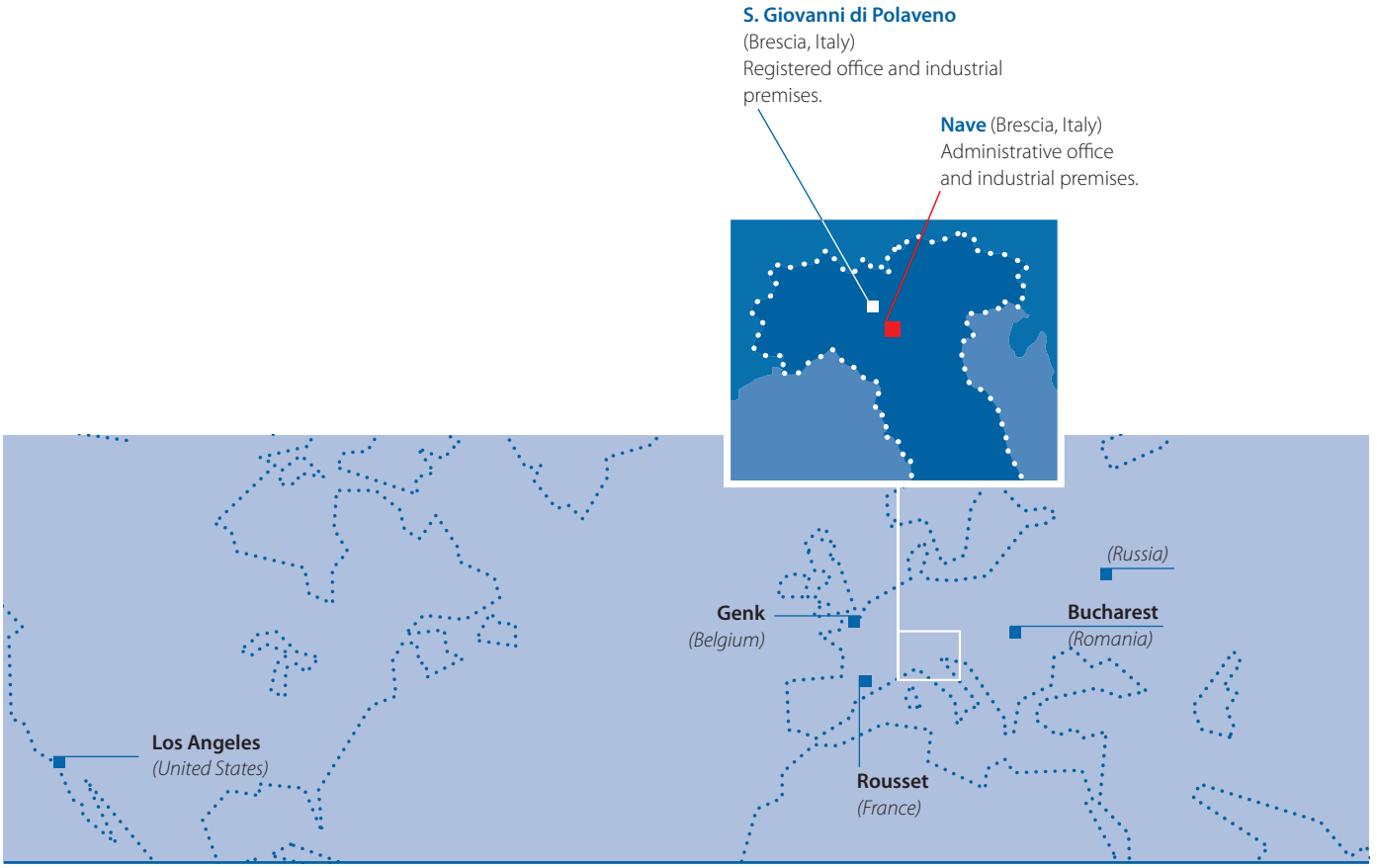

Certifications*.
Certifications.*
Сертифицировано.*
Certificari.*
Certificación.*
Zertifizierungen.*

ISO 9001:2015 - Cert. n° 0033

** See the catalogue to check the certified products.*

PRODUCT APPLICATION FIELD: Unless otherwise specified, RBM products are suitable for use with water and water + glycol.

CODICE	P.
1139.03.00	100
1139.03.40	100
1139.03.90	100
1139.04.00	100
1139.04.40	100
1139.04.90	100
1139.05.00	100
1139.05.40	100
1139.05.90	100
120.09.00	103
120.10.00	103
120.11.00	103
120.13.00	103
126.03.10	92
126.04.10	92
126.05.10	92
126.06.10	92
126.07.10	92
126.08.10	92
126.09.10	92
126.10.10	92
126.11.10	92
126.13.10	92
139.10.50	195
139.12.50	195
139.14.50	195
139.15.50	195
140.04.00	195
1401.10.00	194
1401.12.00	194
1401.14.00	194
1401.15.00	194
1401.16.00	194
178.04.00	194
178.05.00	194
178.06.00	194
18.01.00	84
18.02.00	84
18.03.00	84
18.04.00	84
2133.04.00	103
2133.05.00	103
2133.06.00	103
2133.07.00	103
2133.08.00	103
2133.09.00	103
216.05.60	55
216.06.60	55
216.07.60	55
2201.04.10	30
2201.04.25	30
2201.04.30	30
2201.04.40	30
2201.04.60	30
2201.04.70	30
2201.14.10	30
2201.14.25	30
2201.14.30	30
2201.14.40	30
2201.14.60	30
2201.14.70	30
222.05.00	190
222.05.10	190
224.20.10	189

CODICE	P.
224.20.20	189
2319.05.50	71
2319.06.50	71
2319.07.50	71
2343.05.00	84
2344.05.50	70
2344.06.50	70
2344.07.50	70
240.05.00	191
2405.05.00	70
2405.06.00	70
242.04.00	191
244.10.05	194
2545.05.10	30
2545.05.30	30
2545.05.40	30
2545.05.60	30
2545.05.70	30
2545.15.10	30
2545.15.30	30
2545.15.40	30
2545.15.60	30
2545.15.70	30
2649.05.00	57
2649.06.00	57
2796.16.00	195
2809.04.11	31
2809.04.60	31
2809.04.81	31
2809.04.90	31
2809.05.11	31
2809.05.60	31
2809.05.81	31
2809.05.90	31
2809.06.11	31
2809.06.60	31
2809.06.81	31
2809.06.90	31
2809.07.11	31
2809.07.60	31
2809.07.81	31
2809.07.90	31
2827.03.10*	53
2827.03.90	54
2827.04.00	53
2827.04.90	54
2828.03.10*	54
2828.04.00	54
2829.04.00	60
2829.05.00	60
2829.06.00	60
2829.07.00	60
2829.08.00	60
2829.09.00	60
2829.09.72	60
2829.10.72	60
2829.11.72	60
2829.13.72	60
2829.14.72	60
2829.15.72	60
2830.04.00	56
2830.05.00	56
2830.06.00	56
2830.07.00	56

CODICE	P.
2830.08.00	56
2830.09.00	56
2830.09.72	57
2830.10.72	57
2830.11.72	57
2830.13.72	57
2830.14.72	57
2830.15.72	57
2831.04.00	61
2831.05.00	61
2831.06.00	61
2831.07.00	61
2831.09.72	62
2831.10.72	62
2831.11.72	62
2831.13.72	62
2831.14.72	62
2831.15.72	62
2836.04.00	56
2840.03.00	55
2840.04.00	55
2848.04.00	96
2848.05.00	96
2848.06.00	96
2848.07.00	96
2848.08.00	96
2848.09.00	96
2863.04.00	75
2863.05.00	75
2863.06.00	75
2863.07.00	75
288.04.80	99
288.05.80	99
2909.04.00	96
2909.05.00	96
2909.06.00	96
2909.07.00	96
2909.08.00	96
2909.09.00	96
294.40.04	191
3.03.00	88
3.03.10	88
3.03.20	88
3.03.70	88
3.04.00	88
304.00.02	102
304.04.00	102
304.05.00	102
304.06.00	102
304.07.00	102
304.08.00	102
304.09.00	102
304.10.00	102
3.04.10	88
304.11.00	102
304.13.00	102
3.04.20	88
3.04.70	88
3.05.00	88
3.05.10	88
3.05.20	88
3.05.70	88
3.06.00	88
3.06.10	88

CODICE	P.
3.06.20	88
3.06.70	88
3.07.00	88
3070.05.00	64
3070.05.50	64
3.07.10	88
3.07.20	88
3072.04.00	103
3.07.70	88
3.08.00	88
3.08.10	88
3.08.20	88
3.08.70	88
3.09.00	88
3.09.10	88
3.09.20	88
3.09.70	88
3.10.00	88
3.10.10	88
3.10.20	88
3.11.00	88
3.11.10	88
3.11.20	88
3.13.00	88
3.13.10	88
3.13.20	88
3173.04.00	74
3173.05.00	74
3173.06.00	74
3173.07.00	74
3173.08.00	74
3173.09.00	74
3174.05.00	66
3174.05.10	66
3174.05.20	66
3174.05.30	66
3286.05.00	83
3287.05.16	83
3287.05.20	83
3288.05.16	83
3288.05.20	83
3289.00.00	83
3290.00.00	83
3491.05.00	61
3491.06.00	61
351.04.10	27
351.04.11	27
351.04.20	27
351.04.30	27
351.04.40	27
351.04.50	27
351.04.60	27
351.04.70	27
351.04.71	27
351.04.80	27
351.04.81	27
351.04.90	27
351.05.10	27
351.05.11	27
351.05.20	27
351.05.30	27
351.05.40	27
351.05.50	27
351.05.60	27

CODICE	P.
351.05.70	27
351.05.71	27
351.05.80	27
351.05.81	27
351.05.90	27
352.04.10	28
352.04.11	28
352.04.20	28
352.04.30	28
352.04.40	28
352.04.50	28
352.04.60	28
352.04.70	28
352.04.71	28
352.04.80	28
352.04.81	28
352.04.90	28
352.05.10	28
352.05.11	28
352.05.20	28
352.05.30	28
352.05.40	28
352.05.50	28
352.05.60	28
352.05.70	28
352.05.71	28
352.05.80	28
352.05.81	28
352.05.90	28
353.04.10	29
353.04.11	29
353.04.20	29
353.04.30	29
353.04.40	29
353.04.50	29
353.04.60	29
353.04.70	29
353.04.71	29
353.04.80	29
353.04.81	29
353.04.90	29
353.05.10	29
353.05.11	29
353.05.20	29
353.05.30	29
353.05.40	29
353.05.50	29
353.05.60	29
353.05.70	29
353.05.71	29
353.05.80	29
353.05.81	29
353.05.90	29
354.04.10	30
354.04.11	30
354.04.20	30
354.04.30	30
354.04.40	30
354.04.50	30
354.04.60	30
354.04.70	30
354.04.71	30
354.04.80	30
354.04.81	30

INDEX

CODICE	P.
354.04.90	30
3541.09.10	80
3541.10.10	80
3541.11.10	80
3541.13.10	80
3541.14.10	80
3541.15.10	80
3548.05.00	73
3548.06.00	73
3574.03.00	54
3574.04.00	54
3574.05.00	54
3601.09.02	80
3601.10.02	80
3601.11.02	80
3601.13.02	80
3601.14.02	80
3601.15.02	80
3602.04.00	78
3602.05.00	78
3602.06.00	78
3602.07.00	78
3602.08.00	78
3602.09.00	78
3603.07.00	33
3603.08.00	33
3603.09.00	33
3603.09.10	33
3603.10.10	33
3603.11.10	33
3611.00.02	78
3699.06.00	73
3701.05.80	65
3701.05.90	65
3703.04.02	92
3703.04.12	92
3703.05.02	92
3703.06.02	92
37.03.60	55
37.04.60	55
37.05.60	55
37.05.70	58
37.06.60	55
3707.00.02	92
3707.00.12	92
3711.00.00	67
3711.00.10	67
3711.00.50	67
3711.00.60	67
3739.04.12	60
3739.05.12	60
3739.06.12	60
3739.07.12	60
3739.08.12	60
3739.09.02	61
3739.09.12	60
3739.10.02	61
3739.11.02	61
3739.13.02	61
3739.14.02	61
3739.15.02	61
3740.04.12	56
3740.05.12	56
3740.06.12	56

CODICE	P.
3740.07.12	56
3740.08.12	56
3740.09.02	57
3740.09.12	56
3740.10.02	57
3740.11.02	57
3740.13.02	57
3740.14.02	57
3740.15.02	57
3741.04.12	62
3741.05.12	62
3741.06.12	62
3741.07.12	62
3741.09.02	62
3741.10.02	62
3741.11.02	62
3741.13.02	62
3741.14.02	62
3741.15.02	62
3744.04.12	75
3744.05.12	75
3744.06.12	75
3744.07.12	75
3744.08.12	75
3744.09.12	75
3745.04.12	75
3745.05.12	75
3745.06.12	75
3745.07.12	75
3746.05.12	71
3747.05.12	73
3773.07.00	74
3773.07.10	74
3773.07.20	74
38.03.70	53
38.04.10	53
38.04.50	53
38.04.70	53
4.04.00	89
4.04.10	89
4.04.20	89
4.04.70	89
4.05.00	89
4.05.10	89
4.05.20	89
4.05.70	89
4.06.00	89
4.06.10	89
4.06.20	89
4.06.70	89
4.07.00	89
4.07.10	89
4.07.20	89
4.07.70	89
4.08.00	89
4.08.10	89
4.08.20	89
4.08.70	89
4.09.00	89
4.09.10	89
4.09.20	89
4.09.70	89
42.00.00	191
42.05.00	192

CODICE	P.
42.05.30	193
42.06.00	192
42.06.30	193
43.03.00	192
43.04.00	192
43.05.00	193
43.06.00	193
45.05.00	192
45.06.00	192
47.06.10	34
51.04.10	95
51.04.70	94
51.04.95	94
51.05.10	95
51.05.70	94
51.05.95	94
51.06.10	95
51.06.70	94
51.06.95	94
51.07.10	95
51.07.70	94
51.07.95	94
51.08.10	95
51.08.70	94
51.08.95	94
51.09.10	95
51.09.70	94
51.09.95	94
51.10.10	95
51.10.70	94
51.11.10	95
51.11.70	94
51.13.10	95
51.13.70	94
56.05.00	193
56.05.30	193
56.06.00	193
56.06.30	193
56.07.00	193
57.05.00	194
57.06.00	194
57.16.00	192
57.18.00	192
605.04.00	25
605.04.10	25
605.04.20	25
605.04.30	25
605.04.40	25
605.04.50	25
605.04.60	25
605.04.70	25
605.04.80	25
605.04.90	25
605.05.00	25
605.05.10	25
605.05.20	25
605.05.30	25
605.05.40	25
605.05.50	25
605.05.60	25
605.05.70	25
605.05.80	25
605.05.90	25
605.06.00	25

CODICE	P.
605.06.10	25
605.06.20	25
605.06.30	25
605.06.40	25
605.06.50	25
605.06.60	25
605.06.70	25
605.06.80	25
605.06.90	25
605.07.00	25
605.07.10	25
605.07.20	25
605.07.30	25
605.07.40	25
605.07.50	25
605.07.60	25
605.07.70	25
605.07.80	25
605.07.90	25
616.04.00	35
616.05.00	35
616.06.00	35
616.07.00	35
616.08.00	35
616.09.00	35
666.05.00	26
666.06.00	26
666.07.00	26
666.08.00	26
735.12.00	195
735.16.00	195
735.16.10	195
735.16.20	195
791.03.40	53
791.04.40	53
811.14.30	32
811.14.40	32
811.15.30	32
811.15.40	32
811.16.30	32
811.16.40	32
811.17.30	32
811.17.40	32
858.04.02	90
858.04.12	90
858.04.72	90
858.05.02	90
858.05.12	90
858.05.72	90
858.06.02	90
858.06.12	90
858.06.72	90
858.07.02	90
858.07.12	90
858.07.72	90
858.08.02	90
858.08.12	90
858.08.72	90
858.09.02	90
858.09.12	90
858.09.72	90
87.03.10	98
87.03.70	99
87.03.80	98

CODICE	P.
87.04.10	98
87.04.60	99
87.04.70	99
87.04.80	98
87.05.10	98
87.05.60	99
87.05.70	99
87.05.80	98
87.06.60	99
87.06.70	99
87.07.60	99
87.07.70	99
87.08.60	99
87.08.70	99
87.09.60	99
87.09.70	99
90.08.00	192

CODICE	P.
1002.06.10	276
1002.06.40	276
1002.06.50	277
1003.06.10	276
1003.06.40	276
1003.06.50	277
1004.06.10	276
1004.06.40	276
1004.06.50	277
1005.06.10	276
1005.06.40	276
1005.06.50	277
1006.06.10	276
1006.06.40	276
1006.06.50	277
1007.06.10	276
1007.06.40	276
1007.06.50	277
1008.06.10	276
1008.06.40	276
1008.06.50	277
1009.06.10	276
1009.06.40	276
1009.06.50	277
1010.06.10	276
1010.06.40	276
1010.06.50	277
1011.06.10	276
1011.06.40	276
1011.06.50	277
1012.06.10	276
1012.06.40	276
1012.06.50	277
1013.06.10	276
1013.06.40	276
1013.06.50	277
1083.00.02	234
1095.00.00	291
114.06.30	291
1152.06.00	290
1188.20.02	228
1349.09.00	281
1350.09.00	281
1351.09.00	281

CODICE	P.
1352.09.00	281
1353.09.00	281
1354.09.00	281
1355.09.00	281
1356.09.00	281
1357.09.00	281
1358.09.00	281
1359.09.00	281
1360.00.10	281
1360.00.30	281
1361.10.00	228
1361.18.00	228
1361.28.00	228
1361.42.00	228
1361.50.00	228
1410.06.10	273
1410.06.20	275
1410.06.40	274
1410.06.70	274
1411.06.10	273
1411.06.20	275
1411.06.40	274
1411.06.70	274
1412.06.10	273
1412.06.20	275
1412.06.40	274
1412.06.70	274
1413.06.10	273
1413.06.20	275
1413.06.40	274
1413.06.70	274
1414.06.10	273
1414.06.20	275
1414.06.40	274
1414.06.70	274
1415.06.10	273
1415.06.20	275
1415.06.40	274
1415.06.70	274
1416.06.10	273
1416.06.20	275
1416.06.40	274
1416.06.70	274
1417.06.10	273
1417.06.20	275
1417.06.40	274
1417.06.70	274
1418.06.10	273
1418.06.20	275
1418.06.40	274
1418.06.70	274
1419.06.10	273
1419.06.20	275
1419.06.40	274
1419.06.70	274
1420.06.10	273
1420.06.20	275
1420.06.40	274
1420.06.70	274
1420.13.10	273
1420.13.20	275
1420.13.40	274
1420.13.70	274
1420.14.10	273
1420.14.20	275
1420.14.40	274
1484.16.02	236
1484.16.22	236
1484.16.32	236
1484.17.02	236
1484.17.12	236
1484.17.22	236
1484.20.02	236
1484.25.02	236
1484.25.12	236
1531.06.50	257
1531.06.51	252
1531.06.71	250
1532.06.50	257
1533.06.50	257
1534.06.50	257
1535.06.50	257
1536.06.50	257
1537.06.50	257
1538.06.50	257
1539.06.50	257
1540.06.50	257
1553.00.02	292
1938.13.00	229
1938.25.00	229
1938.40.00	229
1944.16.00	288
19475702	241
1972.55.00	278
1972.70.00	278
1972.85.00	278
1997.00.00	233
1997.00.10	233
1997.00.20	233
1997.00.30	234
2003.42.02	241
2009.17.02	236
2009.20.02	236
2018.00.02	245
2028.06.10	271
2028.06.50	273
2028.06.60	272
2029.06.10	271
2029.06.50	273
2029.06.60	272
2030.06.10	271
2030.06.50	273
2030.06.60	272
2031.06.10	271
2031.06.50	273
2031.06.60	272
2032.06.10	271
2032.06.50	273
2032.06.60	272
2033.06.10	271
2033.06.50	273
2033.06.60	272
2034.06.10	271
2034.06.50	273
2034.06.60	272
2035.06.10	271
2035.06.50	273
2035.06.60	272
2036.06.10	271
2036.06.50	273
2036.06.60	272
2037.06.10	271
2037.06.50	273
2037.06.60	272
2038.06.10	271
2038.06.50	273
2038.06.60	272
2038.13.10	271
2038.13.50	273
2038.13.60	272
2038.14.10	271
208.05.10	289
217.16.00	286
217.17.00	286
217.20.00	286
224.16.00	286
224.20.00	286
2294.00.32	293
2295.00.02	292
2295.00.12	292
2517.16.02	235
2517.16.12	235
2517.16.22	235
2517.17.02	235
2517.17.12	235
2517.17.22	235
2517.20.02	235
2517.20.32	235
2531.16.02	244
2532.10.02	245
2533.15.00	230
2533.23.00	230
2533.33.00	230
2533.47.00	230
2606.10.02	278
2606.40.02	278
2606.60.02	278
2606.80.02	278
2923.07.02	244
2926.17.02	227
2926.25.02	227
2926.25.12	227
2926.33.12	227
2926.48.12	227
2948.00.02	278
3055.00.12	245
306.00.02	285
306.00.12	285
306.00.42	285
306.00.52	285
311.05.00	289
3167.25.00	230
3189.00.02	285
3189.00.12	285
3189.00.42	285
3189.00.52	285
3201.06.00	261
3201.06.20	261
3201.06.20	268
3201.06.30	267
3202.06.00	261
3202.06.10	266
3202.06.20	261
3202.06.20	268
3202.06.30	267
3202.06.60	267
3203.06.00	261
3203.06.10	266
3203.06.20	261
3203.06.20	268
3203.06.30	267
3203.06.60	267
3204.06.00	261
3204.06.10	266
3204.06.20	261
3204.06.20	268
3204.06.30	267
3204.06.60	267
3205.06.00	261
3205.06.10	266
3205.06.20	261
3205.06.20	268
3205.06.30	267
3205.06.60	267
3206.06.10	266
3206.06.60	267
3207.06.10	266
3207.06.60	267
3208.06.10	266
3208.06.60	267
3209.06.10	266
3209.06.60	267
3210.06.10	266
3210.06.60	267
3211.06.10	266
3211.06.60	267
3212.06.10	266
3212.06.60	267
3213.06.10	266
3213.06.60	267
3214.06.10	266
3214.06.60	267
3215.06.50	261
3215.06.50	268
3216.06.50	261
3216.06.50	268
3217.06.00	262
3248.06.00	270
3523.06.51	252
3524.06.90	258
3525.06.90	258
3526.06.90	258
3527.06.90	258
3528.06.90	258
3529.06.90	258
3530.06.90	258
3531.06.90	258
3532.06.90	258
3533.06.90	258
3609.00.02	286
3615.03.00	260
3615.04.00	260
3615.05.00	260
3615.06.00	260
3615.07.00	260
3615.08.00	260
3615.09.00	260
3615.10.00	260
3615.11.00	260
3615.12.00	260
3615.13.00	260
3615.14.00	260
3616.06.00	260
3617.06.00	260
3618.06.00	260
3619.06.00	260
3620.06.00	260
3668.03.00	264
3668.04.00	264
3668.05.00	264
3668.06.00	264
3668.07.00	264
3668.08.00	264
3668.09.00	264
3668.10.00	264
3668.11.00	264
3668.12.00	264
3668.13.00	264
3668.14.00	264
3670.10.02	240
3672.00.02	263
3672.00.02	269
3672.10.02	263
3672.10.02	269
3673.10.02	262
3673.20.02	262
3673.30.02	262
3673.40.02	262
3673.50.02	262
3674.10.02	262
3674.10.02	269
3674.20.02	262
3674.20.02	269
3674.30.02	262
3674.30.02	269
3674.40.02	262
3674.40.02	269
3674.50.02	262
3674.50.02	269
3691.02.60	282
3691.02.70	283
3691.03.60	282
3691.03.70	283
3691.04.60	282
3691.04.70	283
3691.05.60	282
3691.05.70	283
3691.06.60	282
3691.06.70	283
3691.07.60	282
3691.07.70	283
3691.08.60	282
3691.08.70	283
3691.09.60	282
3691.09.70	283
3691.10.60	282
3691.10.70	283
3691.11.60	282
3691.11.70	283
3691.12.60	282

CODICE	P.
3691.12.70	283
3691.13.60	282
3691.13.70	283
3691.14.60	282
3691.14.70	283
3702.00.02	245
3705.00.02	282
3705.00.02	283
3705.00.12	283
3749.04.00	294
3750.03.00	294
3750.04.00	299
3751.01.00	294
3751.02.00	294
3751.03.00	294
3751.03.10	294
3751.04.00	299
3751.04.10	299
3752.04.00	300
3752.04.10	300
3753.12.00	296
3753.12.00	300
3753.12.10	296
3753.12.10	300
3754.00.02	297
3754.00.02	302
3755.00.02	298
3756.04.00	299
3757.04.00	300
3761.00.00	295
3761.00.10	295
3761.00.20	294
3761.00.20	295
3761.00.30	295
3763.00.00	301
3763.00.10	301
3763.00.20	300
3764.00.00	299
3767.00.02	298
3767.00.02	298
3767.00.02	303
3767.00.02	303
3767.00.12	298
3767.00.12	303
3767.00.22	298
3767.00.22	303
3767.00.32	298
3767.00.32	303
379.20.03	290
3796.10.02	279
3796.40.02	279
3796.60.02	279
3796.85.02	279
386.00.22	291
450.06.00	290
450.07.00	290
464.08.02	235
464.08.12	235
464.10.02	236
464.10.12	236
464.16.02	235
464.16.12	235
464.16.22	235
464.17.02	235

CODICE	P.
464.17.12	235
464.17.22	235
464.20.02	235
464.20.32	235
464.25.02	235
464.25.22	235
468.39.02	241
468.45.00	241
468.45.12	241
469.00.02	241
470.00.02	244
472.08.12	240
472.15.12	240
475.10.02	242
475.10.12	242
475.25.02	242
475.25.12	240
476.10.02	243
476.40.02	241
483.25.02	239
483.32.02	239
595.00.00	243
595.00.22	244
595.00.42	243
595.00.52	244
603.18.12	239
603.20.12	239
603.25.02	239
608.06.10	271
608.26.10	271
609.06.10	271
610.06.10	271
611.06.10	271
612.06.10	271
613.06.10	271
614.06.10	271
615.06.10	271
616.06.10	271
616.12.10	271
616.13.10	271
616.14.10	271
667.00.00	239
693.20.02	232
693.30.02	232
693.42.02	232
693.47.02	232
701.06.50	256
701.06.51	251
701.06.60	256
701.06.61	249
702.06.50	256
702.06.60	256
703.06.50	256
703.06.60	256
704.06.50	256
704.06.60	256
705.06.50	256
705.06.60	256
706.06.50	256
706.06.60	256
707.06.50	256
707.06.60	256
708.06.50	256
708.06.60	256

CODICE	P.
709.06.50	256
709.06.60	256
709.12.50	256
709.12.60	256
734.15.12	229
734.25.12	229
734.35.12	229
734.42.12	229
734.58.12	229
734.71.12	229
770.06.51	251
770.06.61	251
770.06.80	255
770.06.90	255
771.06.80	255
771.06.90	255
772.06.80	255
772.06.90	255
773.06.80	255
773.06.90	255
774.06.80	255
774.06.90	255
775.06.80	255
775.06.90	255
776.06.80	255
776.06.90	255
777.06.80	255
777.06.90	255
778.06.80	255
778.06.90	255
778.12.80	255
778.12.90	255
778.13.80	255
778.13.90	255
778.20.02	239
782.06.51	249
782.06.61	249
782.06.80	254
782.06.90	254
783.06.80	254
783.06.90	254
784.06.80	254
784.06.90	254
785.06.80	254
785.06.90	254
786.06.80	254
786.06.90	254
787.06.80	254
787.06.90	254
788.06.80	254
788.06.90	254
789.06.80	254
789.06.90	254
790.06.80	254
790.06.90	254
790.12.80	254
790.12.90	254
790.13.80	254
790.13.90	254
793.06.00	291
825.00.02	242
857.90.03	289
862.16.00	242
862.16.10	242

CODICE	P.
862.20.00	242
862.20.10	242
862.24.42	242
864.70.05	264
864.70.05	270
898.10.02	281
898.15.02	281
898.60.02	281
924.10.05	250
924.10.05	252
924.20.05	250
924.20.05	252
924.30.05	250
924.30.05	252
936.08.00	248
936.08.10	248
937.08.00	248
937.20.00	248
940.20.40	247
941.05.60	258
944.20.20	247
944.20.40	247
945.08.00	248
945.08.10	248
945.20.00	246
945.21.00	246
946.20.00	246
946.21.00	246
947.20.00	246
947.21.00	246
957.40.05	299

CODICE	P.
1165.00.02	339
1253.04.00	331
1253.04.10	331
1253.04.20	331
1253.04.50	331
1253.04.60	331
1338.00.02	341
1339.00.02	341
1340.14.02	341
1340.16.02	341
1340.18.02	341
1340.20.02	341
1340.26.02	341
1340.32.02	341
1495.00.02	340
1496.00.02	341
1541.16.40	319
1541.16.50	319
1541.16.80	318
1541.16.90	318
1541.20.40	319
1541.20.50	319
1541.20.80	318
1541.20.90	318
1541.26.40	319
1541.26.50	319
1541.32.40	319
1541.32.50	319
1542.16.00	318
1542.16.30	318

CODICE	P.
1542.16.40	318
1542.20.00	318
1542.20.40	318
1542.26.00	318
1542.32.00	318
1543.16.00	318
1543.20.00	318
1543.26.00	318
1543.32.00	318
1544.16.40	321
1544.16.50	321
1544.16.80	320
1544.16.90	320
1544.20.40	321
1544.20.50	321
1544.20.80	320
1544.20.90	320
1544.26.40	321
1544.26.50	321
1544.32.40	321
1544.32.50	321
1545.16.00	320
1545.16.10	320
1545.16.20	320
1545.20.00	320
1545.20.10	320
1545.20.50	320
1545.26.00	320
1545.32.00	320
1545.40.00	320
1546.16.00	320
1546.20.00	320
1546.26.00	320
1546.32.00	320
1546.40.00	320
1546.50.00	320
1546.63.00	320
1875.14.02	338
1875.16.02	338
1875.18.02	338
1875.20.02	338
1875.26.02	338
1928.14.02	334
1928.16.02	334
1928.16.12	334
1928.18.02	334
1928.18.12	334
1928.20.02	334
1928.20.12	334
1928.26.12	334
1928.26.22	334
1928.32.22	334
1929.14.02	334
1929.16.02	334
1929.16.12	334
1929.18.02	334
1929.18.12	334
1929.20.02	334
1929.20.12	334
1929.26.12	334
1929.26.22	334
1929.32.22	334
1930.14.02	334
1930.16.02	334

CODICE	P.
1930.18.02	334
1930.20.02	334
1930.26.02	334
1930.32.02	334
1931.14.02	336
1931.16.02	336
1931.18.02	336
1931.20.02	336
1931.26.02	336
1931.32.02	336
1932.14.02	336
1932.16.02	336
1932.16.12	336
1932.18.02	336
1932.18.12	336
1932.20.02	336
1932.20.12	336
1932.26.12	336
1932.26.22	336
1932.32.22	336
1933.14.02	337
1933.16.02	337
1933.16.12	337
1933.18.02	337
1933.18.12	337
1933.20.02	337
1933.20.12	337
1933.26.12	337
1933.26.22	337
1933.32.22	337
1934.14.02	335
1934.16.02	335
1934.18.02	335
1934.20.02	335
1934.26.02	335
1934.32.02	335
1935.14.02	335
1935.16.02	335
1935.16.12	335
1935.18.02	335
1935.18.12	335
1935.20.02	335
1935.20.12	335
1935.26.12	335
1935.26.22	335
1935.32.22	335
1936.14.02	335
1936.16.02	335
1936.16.12	335
1936.18.02	335
1936.18.12	335
1936.20.02	335
1936.20.12	335
1936.26.12	335
1936.26.22	335
1936.32.22	335
1937.14.02	336
1937.16.02	336
1937.18.02	336
1937.20.02	336
1946.16.20	321
1946.16.30	321
1946.20.20	321
1946.20.30	321

CODICE	P.
1946.26.20	321
1946.26.30	321
1946.32.20	321
1946.32.30	321
1955.16.30	309
1955.20.30	309
1955.26.30	309
1956.16.00	309
1956.20.00	309
1957.16.00	310
1957.20.00	310
1957.26.00	310
1957.32.00	310
1958.16.20	310
1958.20.20	310
1958.20.30	310
1958.26.30	310
1958.32.40	310
1959.16.20	310
1959.16.30	310
1959.20.20	310
1959.20.30	310
1959.26.30	310
1959.32.40	310
1960.16.00	311
1960.20.00	311
1960.26.00	311
1960.32.00	311
1961.16.20	311
1961.20.20	311
1961.26.30	311
1961.32.40	311
1962.16.20	311
1962.20.20	311
1962.26.30	311
1962.32.40	311
1963.16.00	312
1963.20.00	312
1963.26.00	312
1963.32.00	312
1964.16.20	312
1964.20.20	312
1964.26.30	312
1964.32.40	312
1965.16.10	313
1965.16.30	313
1965.16.60	313
1965.16.90	313
1965.20.00	314
1965.20.10	313
1965.20.20	313
1965.20.40	313
1965.20.70	313
1965.26.00	313
1966.20.00	314
1967.04.00	314
1967.04.10	314
1969.16.00	308
1969.16.10	308
1969.20.00	308
1969.20.10	308
1969.26.00	308
1969.32.00	308
1970.16.00	308

CODICE	P.
1970.20.00	308
1970.26.00	308
1970.32.00	308
20.04.10	332
20.05.10	332
20.05.20	332
2006.14.02	339
2006.16.02	339
2006.18.02	339
2006.20.02	339
2006.26.02	339
2006.32.02	339
2006.40.02	339
2006.50.02	339
2006.63.02	339
2007.00.02	339
2008.00.02	339
2064.20.10	312
2064.26.20	312
2064.32.20	312
2085.16.20	309
2085.16.30	309
2085.20.30	309
2085.26.40	309
2136.06.12	316
2137.06.12	316
2139.00.02	316
2140.00.12	317
2141.00.02	316
2142.00.12	316
2143.00.02	317
2143.00.12	317
2179.00.02	338
3598.16.00	308
3598.20.00	308
3599.00.02	308
3599.00.12	308
553.00.02	340
553.00.12	340
553.00.32	338
553.00.42	338
553.00.52	338
553.00.62	338
553.00.72	338
671.14.00	323
671.16.00	323
671.18.00	323
671.20.00	323
671.26.00	323
671.32.00	323
671.40.00	323
671.50.00	323
671.63.00	323
672.14.20	324
672.16.20	324
672.18.20	324
672.18.30	324
672.20.20	324
672.20.30	324
672.26.30	324
672.26.40	324
672.32.40	324
672.40.40	324
672.40.50	324

CODICE	P.
672.50.60	324
672.63.70	324
673.14.10	324
673.14.20	324
673.16.10	324
673.16.20	324
673.18.20	324
673.18.30	324
673.20.20	324
673.20.30	324
673.26.30	324
673.26.40	324
673.32.40	324
673.40.50	324
673.50.60	324
673.63.70	324
674.14.00	324
674.16.00	324
674.18.00	324
674.20.00	324
674.26.00	324
674.32.00	324
674.40.00	324
674.50.00	324
674.63.00	324
675.14.20	325
675.16.20	325
675.18.20	325
675.18.30	325
675.20.20	325
675.20.30	325
675.26.30	325
675.32.40	325
675.40.50	325
675.50.60	325
676.14.20	325
676.16.20	325
676.18.20	325
676.18.30	325
676.20.20	325
676.20.30	325
676.26.30	325
676.32.40	325
676.40.50	325
677.14.00	325
677.16.00	325
677.18.00	325
677.20.00	325
677.26.00	325
677.32.00	325
677.40.00	325
677.50.00	325
677.63.00	325
678.14.20	326
678.16.20	326
678.18.20	326
678.18.30	326
678.20.20	326
678.20.30	326
678.26.30	326
678.32.30	326
678.32.40	326
678.40.40	326
678.40.50	326

CODICE	P.
678.50.40	326
679.14.20	326
679.16.20	326
679.18.20	326
679.18.30	326
679.20.20	326
679.20.30	326
679.26.30	326
679.32.40	326
680.14.20	326
680.16.20	326
680.18.20	326
680.18.30	326
680.20.20	326
680.20.30	326
680.26.30	326
680.26.40	326
680.32.30	326
680.32.40	326
680.40.40	326
680.40.50	326
681.14.02	340
681.16.02	340
681.18.02	340
681.20.02	340
681.26.02	340
681.32.02	340
681.40.02	340
681.50.02	340
681.63.02	340
812.14.10	322
812.14.20	322
812.16.10	322
812.16.20	322
812.16.30	322
812.18.30	322
812.20.20	322
812.20.30	322
812.26.30	322
812.26.40	322
812.26.50	322
812.32.50	322
826.14.00	323
826.16.00	323
826.18.00	323
826.20.00	323
851.14.00	328
851.14.10	328
851.14.20	328
851.14.50	328
851.16.00	327
851.16.10	328
851.16.20	328
851.16.30	328
851.16.40	328
851.16.60	328
851.16.90	328
851.18.00	328
851.18.10	328
851.18.20	328
851.18.30	328
851.18.40	329
851.20.00	329
851.20.10	327

RBM FOR EFFICIENCY

INDEX

CODICE	P.
851.20.20	328
851.20.40	328
851.20.70	328
851.20.90	328
851.26.00	328
851.26.10	327
851.26.20	327
851.26.40	328
851.26.50	329
851.32.00	327
851.32.10	327
851.32.20	327
851.32.30	329
851.40.00	328
851.40.10	328
851.50.00	328
851.50.20	328
851.63.20	328
851.63.40	328
852.04.00	330
852.04.30	330
853.04.00	330
853.04.10	330
853.04.20	330
853.04.90	330
890.16.00	327
890.18.00	327
890.18.10	327
890.20.10	327
890.20.20	327
890.26.00	327
890.26.10	327
890.26.20	327
890.32.00	327
890.32.10	327
890.32.20	327
890.40.10	327
890.50.00	327
890.50.10	327
890.63.00	327
890.63.10	327
933.16.00	328
934.00.00	315
934.00.00	331
934.00.50	315
934.00.50	331
962.14.00	323
962.16.00	323
962.20.00	323
962.26.00	323
963.16.30	322
963.18.30	322
963.20.30	322
963.26.30	322
999.20.00	329

CODICE	P.
20.04.00	361
20.05.00	361
2093.15.00	359
2093.15.20	359
2093.22.00	359
2093.22.20	359
2093.28.00	359
2093.28.20	359
2093.35.00	359
2093.35.20	359
2093.42.20	359
2093.54.20	359
24.32.10	361
2544.05.00	357
2544.05.10	358
2544.22.00	358
2544.22.10	358
2860.04.02	352
2860.04.12	352
2860.05.02	352
2860.05.12	352
2959.03.00	349
2959.03.70	349
2959.03.90	349
2959.04.00	349
2959.04.70	349
2959.04.90	349
2959.05.00	349
2959.05.70	349
2959.05.90	349
2959.06.00	349
2959.06.70	349
2959.06.90	349
2959.07.00	349
2959.07.70	349
2959.07.90	349
2959.08.00	349
2959.08.90	349
2959.09.00	349
2959.09.90	349
2960.03.00	350
2960.03.70	350
2960.03.90	350
2960.04.00	350
2960.04.70	350
2960.04.90	350
2960.05.00	350
2960.05.70	350
2960.05.90	350
2960.06.00	350
2960.06.70	350
2960.06.90	350
2960.07.00	350
2960.07.70	350
2960.07.90	350
2960.08.00	350
2960.08.90	350
2960.09.00	350
2960.09.90	350
3082.22.00	360
3082.30.00	360
3082.40.00	360
3085 02I	360
3085 04I	360

CODICE	P.
3085 10I	360
3085 12I	360
3085 20I	360
3085 34I	360
3085 38I	360
3086 02I	360
3086 04I	360
3086 10I	360
3086 12I	360
3086 20I	360
3086.22.00	360
3086.30.00	360
3086 34I	360
3086 38I	360
3086.40.00	360
3171.04.00	352
3171.05.00	352
3171.06.00	352
3172.04.00	353
3172.05.00	353
3172.06.00	353
3176.05.00	352
3176.06.00	352
3255 10NI	347
3255 12NI	347
3255 34NI	347
3256 10NI	348
3256 12NI	348
3256 34NI	348
3346.04.70	351
3346.05.70	351
3346.06.70	351
3346.07.70	351
3371 02NI	346
3371 04NI	346
3371 10NI	346
3371 12NI	346
3371 14NI	346
3371 20NI	346
3371 22N	346
3371 22N	349
3371 22N	354
3371 30N	346
3371 30N	349
3371 30N	354
3371 34NI	346
3371 38NI	346
3371 40N	346
3371 40N	349
3371 40N	354
3372 04NI	346
3372 10NI	346
3372 12NI	346
3372 14NI	346
3372 34NI	346
3372 38NI	346
3373 02NI	346
3373 04NI	346
3373 10NI	346
3373 12NI	346
3373 14NI	346
3373 20NI	346
3373 34NI	346
3373 38NI	346

CODICE	P.
3374 10NI	347
3374 12NI	347
3374 14NI	347
3374 34NI	347
3374 38NI	347
3386 A1NI	347
3386 A2NI	347
3386 09NI	347
3465.04.00	359
3465.05.00	359
3465.06.00	359
589.05.00	361
589.06.00	361
67.04.02	357
67.04.12	357
67.05.02	357
67.05.12	357
67.06.02	357
67.06.12	357
67.06.80	351
67.06.90	351
67.07.02	357
67.07.12	357
854.04.32	354
854.04.42	354
854.05.32	354
854.05.42	354
854.06.32	354
854.06.42	354
854.07.32	354
854.07.42	354
854.08.32	354
854.08.42	354
854.09.32	354
854.09.42	354
855.03.32	354
855.03.42	354
860.04.02	360
860.04.12	360
860.05.02	360
860.05.12	360
860.06.02	360
860.06.12	360
860.07.02	360
860.07.12	360
860.08.02	360
860.08.12	360
860.09.02	360
860.09.12	360
885.03.32	355
885.03.42	355
885.03.52	355
885.04.32	355
885.04.42	355
885.04.52	355
885.05.32	355
885.05.42	355
885.05.52	355
885.06.32	355
885.06.42	355
885.06.52	355
886.03.32	356
886.03.42	356
886.04.32	356

CODICE	P.
886.04.42	356
886.05.32	356
886.05.42	356
886.06.32	356
886.06.42	356
886.07.32	356
886.07.42	356
886.08.32	356
886.08.42	356
886.09.32	356
886.09.42	356
887.03.32	356
887.04.32	356
887.05.32	356
887.06.32	356
887.07.32	356
989.03.32	354
989.04.32	354
989.05.32	354
989.06.32	354
989.07.32	354

CODICE	P.
1000.06.00	383
1.041.005	376
1.041.015	376
1.041.025	376
1.041.055	376
106.30.04	393
1.156.003	376
1.156.013	376
1.156.023	376
1.171.003	378
1.171.013	378
1.171.023	378
1.172.003	378
1.172.013	378
1.172.023	378
1.173.003	378
1.173.013	378
1.173.023	378
1.200.003	378
1.200.013	378
1.200.023	378
1.201.003	378
1.201.013	378
1.201.023	378
1213.005	366
1.215.003	378
1.215.013	378
1.215.023	378
1528.06.00	382
1529.06.00	386
1614.06.02	388
1614.06.12	388
1614.06.32	388
2001.00.00	380
2001.00.60	380
2048.10.10	392
2048.10.20	392
2048.15.10	392
2048.85.10	392
2048.85.11	392

CODICE	P.
2048.85.20	392
2048.85.21	392
2049.48.10	392
2049.48.11	392
2049.48.20	392
2049.48.21	392
2049.60.10	392
2049.60.20	392
2049.70.10	392
2049.70.20	392
215.50.05	373
215.50.35	373
221.04.00	387
2240.02.00	367
2250.00.02	382
2250.00.12	382
2250.00.22	382
2257.08.02	388
2261.55.02	379
2261.70.02	379
2261.85.02	379
227.30.05	370
2292.24.02	387
2293.26.02	387
234.30.03	372
244.00.13	371
244.80.23	381
2.549.005	366
2.574.005	366
2.587.003	371
2.587.053	371
2606.10.00	379
2606.40.00	379
2606.60.00	379
2606.80.00	379
265.90.05	381
2.711.005	371
2.711.055	371
271.70.15	389
271.80.04	389
272.20.15	389
272.20.55	389
272.30.04	389
272.50.15	389
272.60.04	389
272.90.15	389
272.90.55	389
27291110	391
27291120	391
27291610	391
27291620	391
27299510	391
27299511	391
27299520	391
27299521	391
273.00.04	389
2740.00.00	369
290.90.15	389
290.90.55	389
291.00.04	389
291.20.15	389
291.20.55	389
291.30.04	389
303.04.00	381

CODICE	P.
307.00.00	370
307.00.10	370
309.70.03	370
3218.00.02	374
3218.00.02	380
3218.00.12	374
3218.00.12	380
3238.00.02	374
3244.00.02	375
33.00.00	369
3310.13	371
3320.13	371
3330.13	371
340.40.05	381
3.511.005	371
3.511.005	371
3.512.005	371
3515.00.00	369
3516.00.02	393
3517.00.02	369
3518.04.02	370
3518.05.02	370
3518.06.02	370
3604.04.02	368
3612.00.02	380
3696.10.52	378
3696.12.52	378
3696.80.52	378
373.00.20	380
380.00.02	366
382.00.02	367
383.00.02	367
402.10.15	381
416.10.05	389
416.20.05	389
416.30.05	389
416.40.05	389
416.50.05	389
416.60.05	389
449.06.50	386
450.06.50	386
456.60.03	379
462.20.03	379
480.00.02	381
55.60.04	393
577.00.02	381
577.00.12	381
590.00.50	374
590.00.50	380
605.90.05	377
605.90.15	377
605.90.55	377
606.20.05	377
606.20.15	377
606.20.55	377
606.50.05	377
606.50.15	377
606.50.55	377
606.80.05	377
606.80.15	377
606.80.55	377
607.10.05	377
607.10.15	377
607.10.55	377

CODICE	P.
607.40.05	377
607.40.15	377
607.40.55	377
625.02.00	367
626.02.00	368
626.02.10	368
626.02.20	368
636.00.50	368
639.02.00	368
640.02.60	368
67.06.30	386
7362.10.00	390
7362.12.00	390
7362.34.00	390
7365 10N	390
7365 12N	390
7365 34N	390
7366 02N	390
7366 04N	390
7366 10N	390
7366 12N	390
7366 14N	390
7366 20N	390
7366 22N	390
7366 30N	390
7366 34N	390
7366 38N	390
7366 40N	390
7.367.005	373
7370 02N	390
7370 04N	390
7370 10N	390
7370 12N	390
7370 14N	390
7370 20N	390
7370 34N	390
7370 38N	390
7.387.005	373
7398 10N	391
7398 12N	391
7398 34N	391
7.401.005	373
7.403.005	373
7419 10N	391
7419 12N	391
7419 34N	391
746.90.05	387
792.06.00	383
804.10.05	380
810.06.00	383
8.167.003	373
8188.005	366
8.201.003	373
8.202.003	373
8.203.003	373
829.06.00	384
829.06.10	384
829.06.30	384
829.26.00	384
829.26.10	384
829.26.30	384
830.06.00	384
830.06.10	384
830.06.30	384

CODICE	P.
831.06.00	384
831.06.10	384
831.06.30	384
83.20.05	387
832.06.00	384
832.06.10	384
832.06.30	384
833.06.00	384
833.06.10	384
833.06.30	384
834.06.00	384
834.06.10	384
834.06.30	384
835.06.00	384
835.06.10	384
835.06.30	384
836.06.00	384
836.06.10	384
836.06.30	384
837.06.00	384
837.06.10	384
837.06.30	384
837.12.00	384
837.12.10	384
837.12.30	384
837.13.00	384
837.13.10	384
837.13.30	384
845.40.05	373
845.40.15	373
845.40.25	373
845.40.55	373
845.50.05	374
845.50.55	374
851.90.15	375
851.90.35	375
8.60.03	392
862.90.05	383
87.50.03	369
87.50.23	382
87.50.33	379
87.50.73	382
878.00.05	372
878.00.15	372
878.20.05	393
878.30.03	392
878.30.03	393
885.20.25	374
885.20.35	374
885.30.05	374
891.00.00	369
910.06.00	386
911.90.03	382
9290.00.03	372
9290.00.13	372
9290.00.53	372
9290.00.63	372
9290.05	376
9290.15	376
9290.25	376
9290.55	376
9300.05	376
9300.15	376
9300.25	376

CODICE	P.
9300.55	376
930.06.00	387
9310.05	376
9310.15	376
9310.25	376
9310.55	376
948.02.00	385
948.02.10	385
948.02.30	385
948.03.00	385
948.03.10	385
948.03.30	385
948.04.00	385
948.04.10	385
948.04.30	385
948.05.00	385
948.05.10	385
948.05.30	385
948.06.00	385
948.06.10	385
948.06.30	385
948.07.00	385
948.07.10	385
948.07.30	385
948.08.00	385
948.08.10	385
948.08.30	385
948.09.00	385
948.09.10	385
948.09.30	385
948.10.00	385
948.10.10	385
948.10.30	385
948.11.00	385
948.11.10	385
948.11.30	385
948.12.00	385
948.12.10	385
948.12.30	385
948.13.00	385
948.13.10	385
948.13.30	385
9590.05	376
9590.15	376
9590.25	376
9590.55	376
998.04.00	388


RBM
Brass

RBM Brass

COMPONENTS FOR PLUMBING AND HEATING SYSTEMS

COMPOSANTS POUR SYSTÈMES HYDROTHERMAUX

КОМПОНЕНТЫ ДЛЯ СИСТЕМ ОТОПЛЕНИЯ

COMPONENTE PENTRU INSTALATII HIDROTERMICE

COMPONENTES PARA SISTEMAS HIDRO-TÉRMICOS

KOMPONENTEN FÜR HYDROTHERMISCHE SYSTEME

1. КОМПОНЕНТЫ ДЛЯ КОТЕЛЬНОЙ СТР. 5
2. SAFETY DEVICES PAG. 23
3. HYDRAULIC BALANCING DEVICES PAG. 37
4. AIR VENT VALVE, DEAERATORS AND SLUDGE REMOVERS PAG. 49
5. COMPONENTS FOR DOMESTIC WATER SYSTEMS PAG. 87
6. TERMINAL ELEMENT VALVES PAG. 105
7. DISTRIBUTION MANIFOLDS AND ACCESSORIES PAG. 145
8. ZONE VALVES PAG. 167
9. HOUSING BOXES PAG. 175
10. FITTINGS PAG. 179


RBM
Brass

BOILER ROOM COMPONENTS

COMPOSANTS POUR CENTRALE THERMIQUE
КОМПОНЕНТЫ ДЛЯ КОТЕЛЬНОЙ
COMPONENTE PENTRU CENTRALA TERMICĂ
COMPONENTES PARA CENTRALES TÉRMICAS
BAUTEILE FÜR HEIZZENTRALE

STOP LEAK water leak detector	pag. 6	
Accessories - circuit filling	pag. 8	
Hydraulic separators	pag. 10	
Booster units DN25	pag. 12	
Booster units DN32	pag. 16	
Differential pressure bypass valves	pag. 21	

3788



Stop Leak
Water leak detector.

Device that trips when leaks and abnormal energy consumption are detected, by cutting the power supply off and thus preventing flooding or unwanted consumption.

The Stop Leak system is composed of:
Motorised shut-off valve;
Thermodynamic micro-leak detection sensor;
Control electronics with potential-free contact interface and/or status remote control;
Remote display and/or management app.

- Sensitivity: 0.2 l/h
- Reaction time: programmable
- Tripping threshold: programmable
- Temperature Range: 0 - 60°C
- Power supply: 24 VDC

NEW

Water leak detector
Dispositif anti-fuites
Устройство защиты от протечек
Dispozitiv anti-pierderi
Dispositivo contra las pérdidas
Vorrichtung gegen Lecks

Code	Size	Pack	Carton
3788.05.00	3/4"	1	1

Patent nr 277370

Protection of your system from leaks or unwanted energy consumption during system downtime.
Prevention from any damage due to water leaks.
Saving on energy consumption.
Advantages for the community (water resource protection device).
Possibility to reduce your home insurance premium.
Easy, smart programming.

057

Stop Leak

RBM Brass

WITH STOP LEAK YOUR PROPERTY IS SAFER



Stop Leak is the result of the latest technology for water leakage detectors. Stop Leak is the only system available on the market that is able to detect leaks on a hydraulic system in the order of 0.2 l/h, a little less than a standard glass.



STOP LEAK avoids serious damages shutting down water supply.



WATER IS PRECIOUS

By avoiding waste or flooding, the system is an efficient solution to optimize use of water, promoting a responsible management of this precious resource.

46



Alinox

Automatic adjustable filling unit to top-up closed circuits, diaphragm operated with anti-water hammer function, complete with removable cartridge micro filter, built-in check valve and dial pressure gauge to view downstream pressure.

Nickel brass body.
Stainless steel seal seats.
Elastomer seals.
Threaded connections FF UNI-EN-ISO 228.

- Nominal pressure 25 Bar
- Max upstream pressure 25 Bar
- Adjustable downstream pressure 0.8 ÷ 5.5 Bar
- Max operating temperature 80 °C
- Pressure gauge scale 0 ÷ 10 Bar
- Filtering grade 800 µm

Diaphragm operated filling unit - pn 25
Groupe de remplissage fonctionnement à membrane - pn 25
Подпиточный клапан мембранного типа - pn 25
Grup de umplere cu funcționare cu membrană - pn 25
Grupo de llenado de funcionamiento con membrana - pn 25
Füllgruppe Membranbetrieb - PN 25

Code	Size	Model	Pack	Carton
46.04.00	G 1/2"	Alinox	1	6

Technical drawing on page 198

Anti-water hammer action.
Outlet regulation 0.8 ÷ 5.5 Bar (with inlet pressure of 8 bar).
With removable cartridge micro filter and built-in check valve.

020

39



SmartFiller M

Automatic adjustable filling unit to top-up closed circuits, diaphragm operated, complete with cartridge micro filter, built-in check valve and dial pressure gauge to view downstream pressure.

Nickel brass body.
Stainless steel seal seats.
Elastomer seals.
Threaded connections MF UNI-EN-ISO 228.

- Nominal pressure 16 Bar
- Max upstream pressure 16 Bar
- Adjustable downstream pressure 0.5 ÷ 4 Bar
- Max operating temperature 80 °C
- Pressure gauge scale 0 ÷ 4 Bar
- Filtering grade 500 µm

Diaphragm operated filling unit - pn 16 with calibrating knob
Groupe de remplissage fonctionnement à membrane - pn 16 avec manette d'étalonnage
Подпиточный клапан мембранного типа - pn 16 с калибровочной рукояткой
Grup de umplere cu funcționare cu membrană - pn 16 cu buton rotativ de calibrare
Grupo de llenado de funcionamiento con membrana - pn 16 con manivela de calibración
Füllgruppe Membranbetrieb - PN 16 mit Drehknopf zur Kalibrierung

Code	Size	Model	Pack	Carton
39.04.00	G 1/2"	SmartFiller M	1	6
39.05.00	G 3/4"	SmartFiller M	1	6

Technical drawing on page 198

Outlet regulation 0,5 ÷ 4 Bar (with inlet pressure of 8 bar).
With cartridge micro filter, built-in check valve and shut-off unit.
Complete with calibration knob.

020

3153



Filler

Automatic adjustable filling unit to top-up closed circuits, piston operated, complete with cartridge micro filter, built-in check valve and dial pressure gauge to view downstream pressure.

Nickel brass body.
Elastomer seals.
Threaded connections MF UNI-EN-ISO 228.

- Nominal pressure 16 Bar
- Max upstream pressure 16 Bar
- Adjustable downstream pressure 0.5 ÷ 4 Bar
- Max operating temperature 80 °C
- Pressure gauge scale 0 ÷ 4 Bar
- Filtering grade 500 µm

Piston-driven filling unit - pn 16
Groupe de remplissage fonctionnement à piston - pn 16
Подпиточный клапан поршневого типа - pn 16
Grup de umplere cu funcționare cu piston - pn 16
Grupo de llenado de funcionamiento con pistón - pn 16
Füllgruppe Kolbenbetrieb - PN 16

Code	Size	Model	Pack	Carton
3153.04.00	G 1/2"	Filler	1	6

Technical drawing on page 198

Outlet regulation 0,5 ÷ 4 Bar (with inlet pressure of 8 bar).
With cartridge micro filter, built-in check valve and shut-off unit.

020

SMARTFILLER M

AUTOMATIC DIAPHRAGM FILLING UNIT EQUIPPED WITH CALIBRATING KNOB



RBM SmartFiller M is an automatic filling unit, a device that reintegrates fluid into the heating systems.

It is composed of: a pressure reducing valve, a check valve and a shut-off valve.

The pressure reducing valve is diapgragm type and equipped with a pressure gauge to measure the output pressure.
The cartridge is compensated seat: upstream pressure variations do not affect the downstream adjustment.

USE

The **RBM SmartFiller M** units are crucial parts that automatically reintegrate any water coming out of the system.
In fact, during the normal operation of a heating system, part of the fluid is lost through the deaerators, in the form of steam mixed with gases that develop continuously in the circuit. The space left free by the fluid, if not duly reinstated, will be occupied by the gases which, when dissolved, form acid solutions that can lead to corrosion.

- Check valve and shut-off valve incorporated
- Output pressure calibration knob
- Pressure gauge
- PN 16

Graduated calibration knob
To immediately adjust the output calibration value.

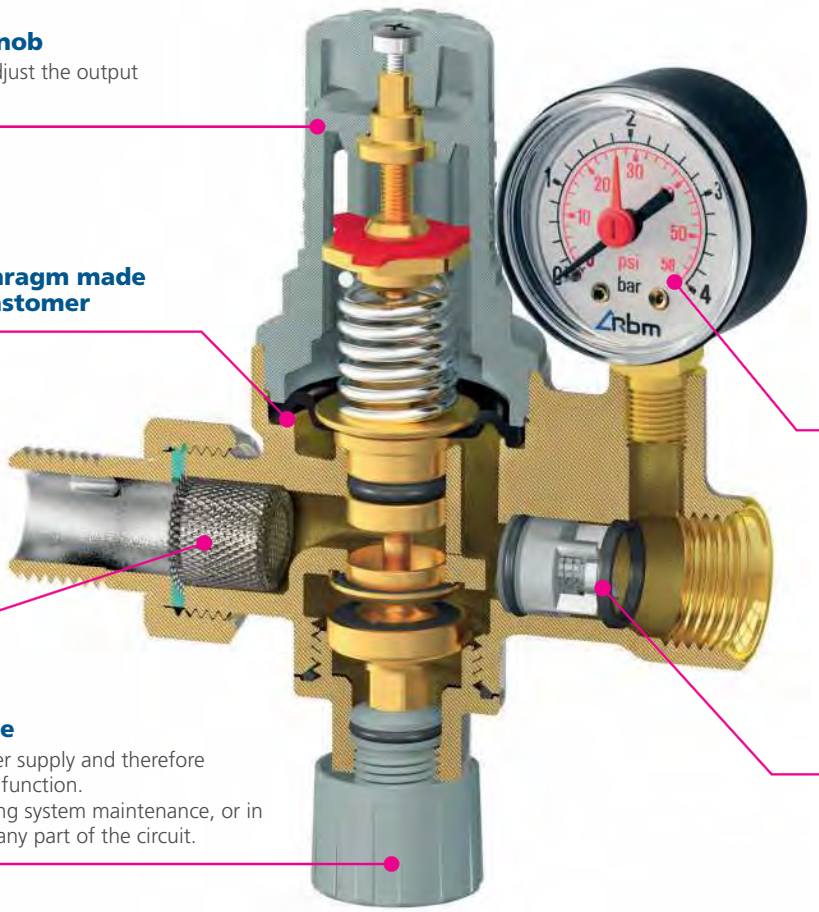

Diaphragm made of elastomer

Pressure gauge
This measures the pressure downstream of the filling unit, namely the pressure in the circuit to be filled.

Filter

Check valve
Prevents the return of the liquid present in the system towards the aqueduct (upstream of the supply unit).

Shut-off valve
Cuts off the power supply and therefore excludes the refill function.
This is useful during system maintenance, or in case of failure of any part of the circuit.

617



Threaded, pre-dimensioned hydraulic separator.

Painted steel body.
Valves and degasser are made of brass.
PTFE ball valves seals.
Elastomer degasser seals.
Threaded union connections F UNI-EN-ISO 228.
Front connection for 1/2" F UNI-EN-ISO 228 accessories.

Max operating pressure:
- Separator body 10 Bar
- Ball valve 25 Bar
- Degasser 10 Bar

Allowed temperatures:
- Degasser 0 ÷ +115 °C
- Ball valve -15 ÷ +120 °C

Threaded hydraulic separator
Séparateur hydraulique fileté
Гидравлический резьбовой сепаратор
Separator hidraulic filetat
Separador hidráulico, conexiones roscadas
Hydraulischer Abscheider mit Gewinde

Code	Size	Flow rate (l/h)	Pack	Carton
617.06.12	1"	2.500	1	60
617.07.12	1"1/4	4.000	1	60
617.08.12	1"1/2	6.000	1	42
617.09.12	2"	8.500	1	30

Supplied complete with MEGALUFT degasser, ball valve to discharge bottom and mud drainage and thermal insulation shell.

Coupled supply hydraulic separator and thermal insulation shell.

005

617



Flanged, pre-dimensioned hydraulic separator.

Painted steel body.
Valves and degasser are made of brass.
PTFE ball valves seals.
Elastomer degasser seals.
PN16 flanged connections.
Connection for 1/2"F UNI-EN-ISO 228 accessories.

Max operating pressure:
- Separator body 10 Bar
- Ball valve 25 Bar
- Degasser 10 Bar

Allowed temperatures:
- Degasser 0 ÷ +115 °C
- Ball valve -15 ÷ +120 °C

Flanged hydraulic separator
Séparateur hydraulique à brides
Фланцевый дренажный сепаратор
Separator hidraulic prevăzut cu flanşă
Separador hidráulico, conexiones embridadas
Hydraulischer Abscheider mit Flansch

Code	Size	Flow rate (l/h)	Pack	Carton
617.09.72	DN 50	9.000	1	1
617.10.72	DN 65	18.000	1	1
617.11.72	DN 80	28.000	1	1
617.13.72	DN 100	56.000	1	1
617.14.72	DN 125	75.000	1	1
617.15.72	DN 150	110.000	1	1

Supplied complete with MEGALUFT degasser, ball valve to discharge bottom and mud drainage and thermal insulation shell.

Coupled supply hydraulic separator and thermal insulation shell.
Flange suitable for coupling with counter-flange UNI EN 1092-1.

005

HYDRAULIC SEPARATOR

The **Hydraulic separator** is a pre-dimensioned manifold with the task of making the primary and secondary circuits independent if, hydraulically connected, they are equipped with their own circulation pumps.

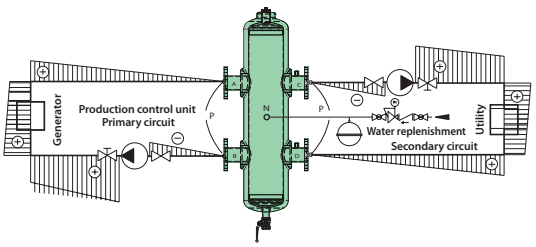

Typical diagram of insertion of the hydraulic separator which separates the primaryand secondary circuit

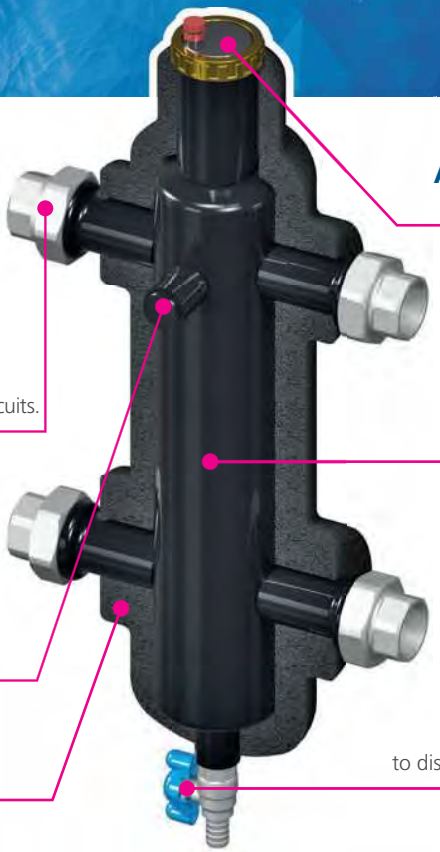

Air venting valve

Threaded / flanged
connections to connect primary and secondary circuits.

Burnished steel body

Threaded sleeve
to install accessories.

Thermal insulation shell

Ball valve
to discharge sludge.



Double internal sludge/flow septum

THE PURPOSE

Insertion of the Separator, as a component of hydraulic separation between the two circuits, mainly provides the following functions:

- **cancels the mutual influence between the pumping stations of the different circuits;**
- **promote the sedimentation, the collection and discharging of micro-impurities suspended in the fluid;**
- **promotes the deaeration of the circuits** by means of the automatic removal of the dissolved gases.

To facilitate the assembly of auxiliary components, such as temperature and pressure control components, system filling circuit, safety pipe for connection to expansion tank, etc... all RBM Hydraulic separators are supplied with threaded sleeves.

THE CHOICE

The Hydraulic separator is chosen based on the maximum flow rate recommended for the connection nozzles.
During the designing phase, pay special attention to possible temperature variations which the circuits can undergo due to induced mixing inside the Hydraulic separator.
A secondary circuit with flow rate higher than that circulating in the primary circuit (fig. 2), generates, in fact, through the Hydraulic separator, a flow temperature below that of the primary circuit.

- Installation and maintenance facilitated by F union connections with flat seat;
- Self-cleaning: equipped with discharge cock;
- Supplied in a kit complete with insulation shell and gas exhaust device.

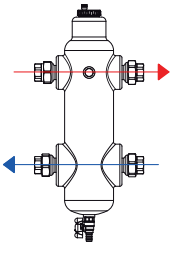

Fig. 1

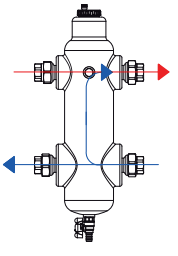

Fig. 2

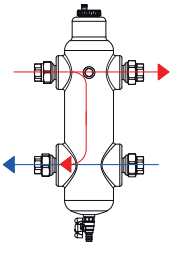

Fig. 3

BOOSTER UNIT *MULTIMIX DN25*



***MULTIMIX* is a hydronic distribution unit for thermal systems** capable of managing 2 or 3 zones.
MULTIMIX MULTIMIX is characterised by **compact size** allowing it to be installed right below the boiler.

The different thermal zones can be supplied by 3 different types of booster unit.

(*) minus the natural "thermal drop" on the hydraulic separator

The types of booster units are as follows:

- ***RD*:** Direct booster unit (without mixing, for zones supplied with water at the same temperature(*) as the one produced by the heat generator).
- ***RF MIX*:** Booster unit mixed at fixed point (constant temperature). *RF MIX* is supplied with two different thermostatic control models for heating only systems in high or low temperature.
- ***RM MIX*:** Modulating mixed booster unit (shifting temperature). Can be coupled to different electric rotary actuators, chosen depending on the type of temperature control selected.

- Combined and modular distribution system
- Modular insulation shell (in EPP 40 g/l) with self-bearing function for wall mounting

- Hydraulic distribution manifold/separator.
  RBM MULTIMIX *DN25* is equipped with an innovative system which, through the manual intervention of a threaded shutter, can separate or joint the supply chamber with the return chamber, thus transforming the manifold/separator into a simple manifold and vice versa.

- Possibility of installing module even underneath boiler thanks to its **compact size**
- Simplified hydraulic connections and seals ensured by flat stops
- Possibility of simultaneous installation of different types of booster units according to different requirements (e.g. 3 direct / 3 mixed / 2 direct + 1 mixed / 1 direct + 2 mixed)
- Set up for installation of a automatic temperature control unit with external probe for shifting temperature mixing unit.

CONFIGURATION WITH SHUTTER OPEN:
"COMMUNICATING CHAMBERS"
(standard configuration in which the module is supplied).
The communication between the supply and return chambers makes it possible to manage a system with one or more circulators which interact upstream and downstream of the manifold/separator.

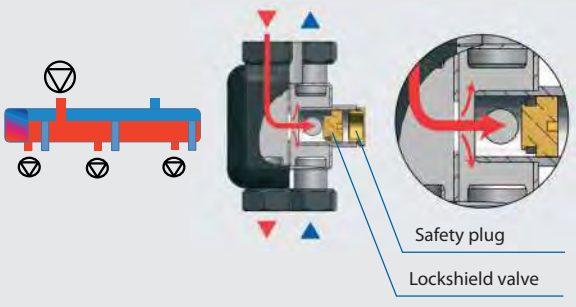

CONFIGURATION WITH SHUTTER CLOSED:
"SEPARATE CHAMBERS".
Configuration necessary when there is no circulator upstream of the manifold which supplies it directly.

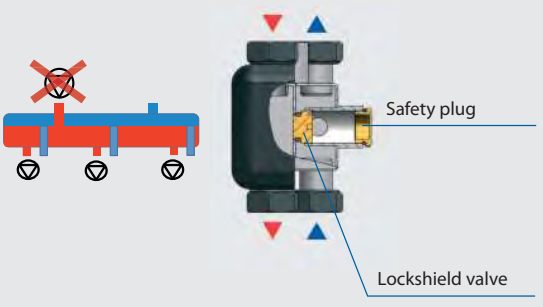

TYPICAL APPLICATIONS OF BOOSTER UNIT *MULTIMIX DN25*

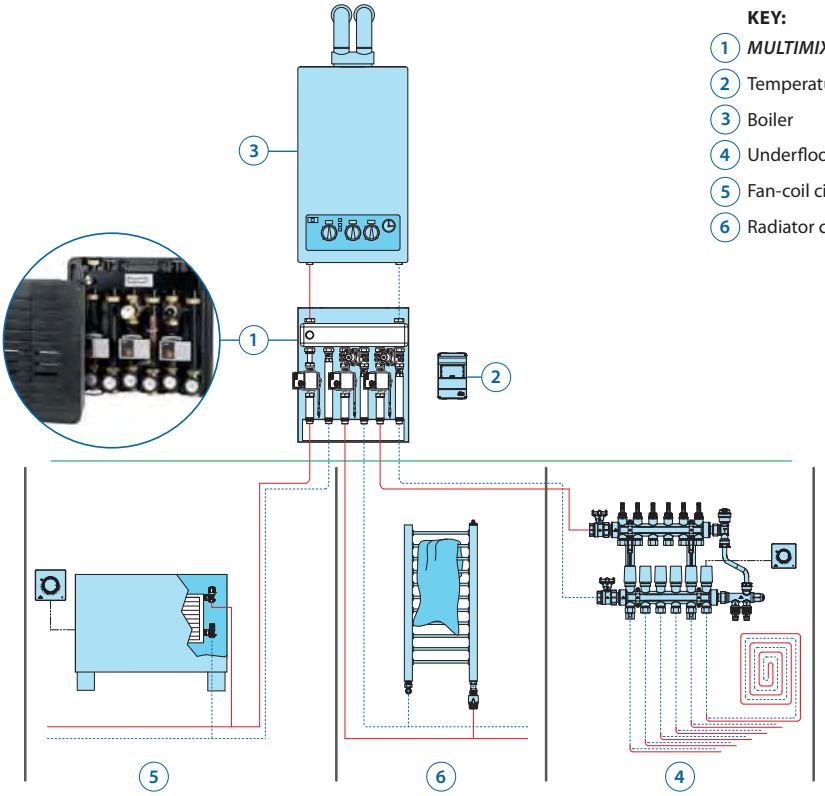

KEY:

1. ***MULTIMIX*** distribution unit
2. Temperature control
3. Boiler
4. Underfloor circuit (*RM MIX* low temperature)
5. Fan-coil circuit (*RD* high temperature)
6. Radiator circuit (*RF MIX* high temperature)

Functional diagram of ***MULTIMIX DN25*** unit for management of 1 low temperature zone (radiant underfloor heating system) and 2 high temperatures zones (fan-coil and radiator).

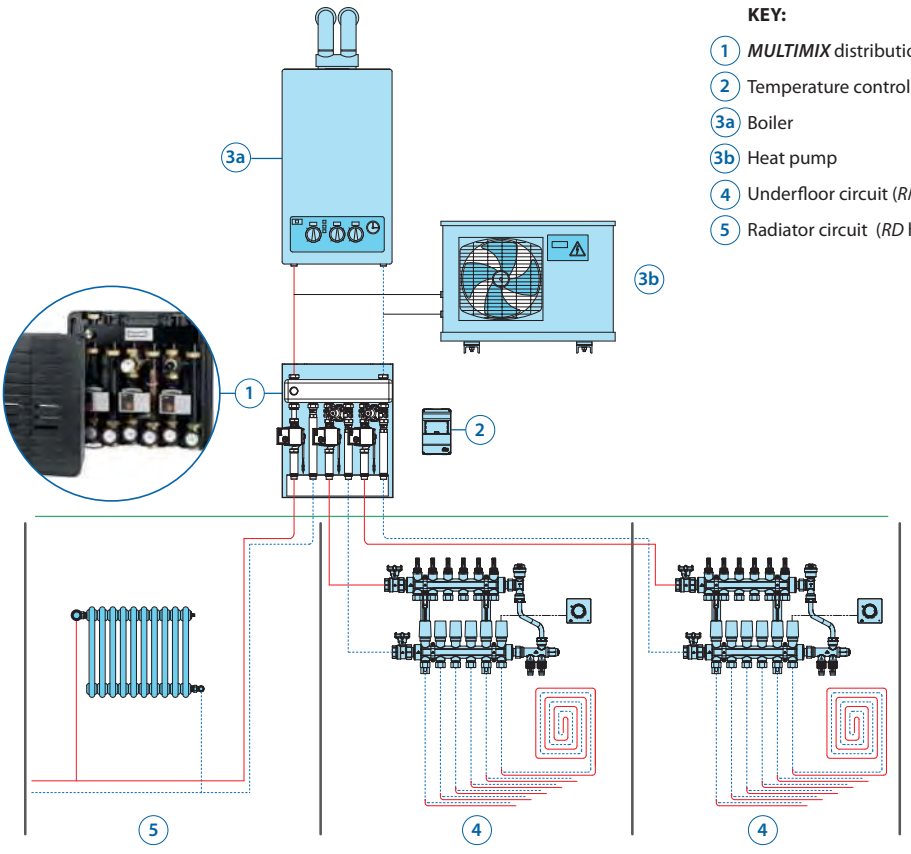

KEY:

1. ***MULTIMIX*** distribution unit
2. Temperature control
3a. Boiler
3b. Heat pump
4. Underfloor circuit (*RM MIX*/*RF MIX* low temperature)
5. Radiator circuit (*RD* high temperature)

Functional diagram of ***MULTIMIX DN25*** unit for management of 2 low temperature zones (radiant underfloor heating system) and 1 high temperature zone (radiators).

3195





Multimix
Multimix booster unit.

Wall-mounted hydraulic manifold for 2 or 3 zones for heating/cooling systems.
Black water-painted steel body.
Module supplied complete with EPP insulation casing (density 60 g/l) serving as casing and wall support of the whole mixing and booster unit.
Manifold can be transformed, as needed, into manifold/hydraulic separator by the manual opening of a shutter on the manifold (supplied in manifold/separator configuration).

1" M threaded connections from the heat generator. Connections on the user side with 1"1/2 F threaded unions.
Connection set-up for 3/4" F safety unit (delivery) and connection for 3/4" F expansion tank (return). Manifold can be coupled to RD25 - RF MIX25 - RM MIX25 modules.

- Maximum operating pressure 6 bar
- Maximum operating temperature 110 °C
- Minimum cooling temperature 7 °C
- Size lxhxp: 402x525x250 mm (2 branches) - 555x525x250 mm (3 branches)

Booster unit
Groupe de relance
Узел запуска
Grup de relansare
Grupo de impulso
Re-Start-Einheit

Code	Size	Ways	Pack	Carton
3195.06.02	DN 25	2	1	1
3196.06.02	DN 25	3	1	1

005

3197



RD
RD Direct booster unit.

High temperature unit for heating/cooling systems complete with:
- High efficiency circulator model model Wilo Yonos Para 25/6;
- 2 shut-off ball valves on system delivery and return with built-in thermometer - 1" F connection;
- Check valve built into system return ball valve, can be excluded for counter washing.

- Maximum operating pressure 6 bar
- Maximum operating temperature 110 °C
- Minimum cooling temperature 7 °C

Direct Booster
Relance Directe
Прямой Запуск
Grup de relansare directă
Impulso directo
Re-Start direkt

Code	Size	Pack	Carton
3197.06.02	DN 25	1	1

005

3198



RF MIX mixing unit.

Fixed point mixed unit for heating only systems, complete with:
- 3-way mixer valve and thermostatic actuator;
- Safety contact thermostat on supply pipe (only model RF MIX B.T.);
- High efficiency circulator model model Wilo Yonos Para 25/6;
- 2 shut-off ball valves on system delivery and return with built-in thermometer - 1" F connection;
- Check valve built into system return ball valve, can be excluded for counter washing.

- Maximum operating pressure 6 bar
- Maximum operating temperature 110 °C

Kit components (booster module and thermostatic head) supplied in 2 separate packages.

RF MIX B.T. - Low Temperature Fixed Point Booster
RF MIX B.T. - Relance Point Fixe Basse Température
RF MIX B.T. - Запуск Punto Fisso Низкой Температуры
RF MIX B.T. - Grup de relansare cu punct fix, joasă temperatură
RF MIX B.T. - Impulso punto fijo baja temperatura
RF MIX B.T. - Re-Start Festpunkt niedrige Temperatur

Code	Size	Pack	Carton
3198.06.00	DN 25	1	1

Supply inclusive of thermostatic head model TL50.
Temperature adjustment range 25÷52 °C

RF MIX A.T. - High Temperature Fixed Point Booster
RF MIX A.T. - Relance Point Fixe Haute Température
RF MIX A.T. - Запуск Punto Fisso Высокой Температуры
RF MIX A.T. - Grup de relansare cu punct fix, înaltă temperatură
RF MIX A.T. - Impulso punto fijo alta temperatura
RF MIX A.T. - Re-Start Festpunkt hohe Temperatur

Code	Size	Pack	Carton
3198.06.10	DN 25	1	1

Supply inclusive of thermostatic head model TL70S.
Temperature range 40÷70°C

005

3199



RM MIX

RM MIX mixing unit.

Mixed unit designed for shifting temperature for heating/cooling systems, complete with:

- 3-way mixer valve (Actuator to couple separately depending on electronic temperature control chosen - see range of actuators);
- High efficiency circulator model model Wilo Yonos Para 25/6;
- 2 shut-off ball valves on system delivery and return with built-in thermometer - 1" F connection;
- Check valve built into system return ball valve, can be excluded for counter washing.

- Maximum operating pressure 6 bar
- Maximum operating temperature 110 °C
- Minimum cooling temperature 7 °C

Climate Booster
Relance Climatique
Климатический 3апуск
Grup de relansare climatică
Impulso climático
Re-Start Klima

Code	Size	Pack	Carton
3199.06.02	DN 25	1	1

Optional actuator series 3232 and 3233 to be ordered separately depending on the electronic temperature control chosen.

005

BOOSTER UNIT *MULTIMIX DN32*



MULTIMIX DN32 DN32 is a hydronic system used in the distribution and management of zone system utilities both for winter heating and summer cooling.
It consists of a hydraulic separator and a distribution manifold (from 2 to 5 zones) connected one to another by pre-insulated pipes and relative booster units, available in two versions:

- ***RD***: Direct booster unit (without mixing, for zones supplied with water at the same temperature(*) as the one produced by the heat generator).
- ***RM MIX***: Modulating mixed booster unit (shifting temperature). Can be coupled to different electric rotary actuators, chosen depending on the type of temperature control selected.

In addition, DN25 booster units designed for metering are available, requiring a specific reducer for connection to the *MULTIMIX C32* manifold.

(*) minus the natural "thermal drop" on the hydraulic separator

- Combined and modular distribution system
- Manifold, separator, connection pipes and booster units thermally insulated with EPP 40 g/l shells
- Simplified hydraulic connections and seals ensured by flat stops
- Rationalisation of space in boiler room
- Set up for installation of one or more temperature control units for shifting temperature mixing unit
- Up to 5 thermal zones
- High flow rates
- Possibility of direct metering to divide consumptions (only with DN25 booster unit).

FUNCTIONAL HYDRAULIC DIAGRAM *MULTIMIX DN32* UNIT

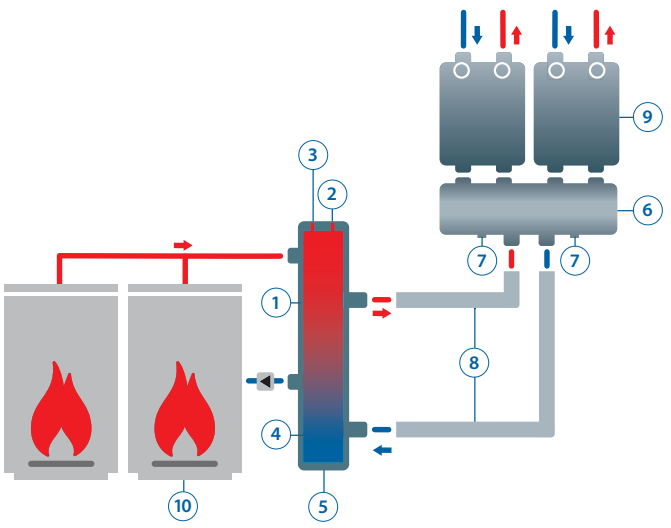

KEY:

1. Hydraulic separator *MULTIMIX S32* code 3219.07.02
2. Connection for air vent
3. Connection for temperature probe holder
4. System load-drain / sludge discharge
5. Connection for support foot (foot not supplied)
6. *MULTIMIX C32* zone manifold (2-3-4-5 utilities)
7. Wall manifold support connection
8. Connection piping kit code 3222.07.X2
9. Direct booster unit *RD32* code 3228.07.02 / mixed *RM MIX32* code 3229.07.02
10. Heat generator

3219



Multimix S32
Hydraulic separator MULTIMIX S32.

Hydraulic separator with 1"1/2 M threaded connections, body made of galvanised steel (Fe 37.1) colour RAL 9004, complete with polyurethane foam insulation covered with aluminium sheet.
Complete with set-up for:
- Air vent 1/2" F connection (unplugged when supplied - any plug to be provided by the installer);
- 1/2" F safety unit connection (unplugged when supplied - any plug to be provided by the installer);
- System sludge drain (2" F hole complete with plug when supplied and positioned on the opposite side of the separator with respect to the manifold);
- 1"1/4 F threaded blind hole on the bottom for fastening the support foot (foot not included).

- Qn max 6.5 m^3/h
- Maximum operating pressure 6 bar
- Maximum operating temperature 120 °C

Hydraulic separator
Séparateur hydraulique
Гидравлический сепаратор
Separator hidraulic
Separador hidráulico
Hydraulischer Abscheider

Code	Size	Pack	Carton
3219.07.02	DN 40	1	1

005

3222



Insulated pipe kit to connect Multimix S32 vertical separator and Multimix C32 zone manifold.

Pipes supplied complete with 2 1"1/2 x 2" reducing couplings for connection on Multimix S32 hydraulic separator side.

- Qn max 6.5 m^3/h
- Maximum operating pressure 6 bar
- Maximum operating temperature 100 °C
- Capacity 4.8 l

Insulated connection pipe kit
Kit tuyaux isolés de raccordement
Комплект изолированных соединительных труб
Kit de tuburi izolate pentru racordări
Kit tuberías aisladas de conexión
Bausatz isolierte Verbindungsleitungen

Code	Size	Ways	Pack	Carton
3222.07.02	DN 32	2 - 3	1	1
3222.07.12	DN 32	4 - 5	1	1

005

3223



Multimix C32
Multimix C32 zone manifold.

Wall-mounted zone manifolds with double chamber for 2, 3, 4 and 5 zones for heating/cooling systems.
2" M threaded connections from the heat generator - centre distance 125 mm, connections to the areas with 2" F threaded fittings - centre distance 125 mm.
Steel body in black water paint (ST37.1 - RAL 9004), complete with black EPP insulation (density 40 g/l).
Square profile manifold.
Supply chamber equal to Ø52 mm (for DN50).
Return chamber equal to Ø41 mm (for DN40).
1" F connection for safety unit (delivery).
3/4" F connection for expansion tank (return).
Possibility of screwing mixing units set up for metering RD25 CONT, RF25 CONT and RM25 CONT by means of specific reductions code 3237.06.02

- Maximum power 120 kW (Δt 20 °C)
- Maximum operating pressure 6 bar
- Maximum operating temperature 120 °C
- Minimum operating temperature 7 °C

Zone manifold
Collecteur de zone
Зонный коллектор
Colector de zonă
Colector de zona
Zonensammelbehälter

Code	Size	Ways	Pack	Carton
3223.07.02	DN 32	2	1	1
3224.07.02	DN 32	3	1	1
3225.07.02	DN 32	4	1	1
3226.07.02	DN 32	5	1	1

005

3227



Wall support kit for Multimix C32 zone manifold.

Wall support for Multimix C32 zone manifold
Kit supports muraux pour collecteur de zone Multimix C32
Настенный держатель для зонного коллектора Multimix C32
Suport mural pentru colectorul de zonă Multimix C32
Soporte mural para colector de zona Multimix C32
Wandhalterung für Zonensammler Multimix C32

Code	Pack	Carton
3227.00.02	1	1

005

3228



RD32
RD32 Direct booster unit.

High temperature unit for heating/cooling systems complete with:
- High efficiency circulator, model Wilo Yonos Para 30/1-6;
- Ball valve with thermometer on system supply and return line;
- Spacer fitting with check valve;
- Black EPP insulation (density 40 g/l).

Maximum flow rate 3000 l/h
Maximum power (Δt = 20°C) 69,7 KW
DN32 - 1"1/4 nominal diameter
Brass ball valves
Check valve in acetalic resin (POM)
Elastomer gaskets
1"1/4 F x 2" M connections

- Maximum operating pressure 6 bar
- Maximum operating temperature 120 °C
- Minimum cooling temperature 11 °C

Direct Booster
Relance Directe
Прямой Запуск
Grup de relansare directă
Impulso directo
Re-Start direkt

Code	Size	Pack	Carton
3228.07.02	DN 32	1	1

005

3229



RM MIX32
RM MIX32 mixing unit.

Mixing unit for heating/cooling system complete with:
- 3-way mixer valve (Actuator to couple separately according to temperature control chosen - see range of actuators);
- High efficiency circulator, model Wilo Yonos Para 30/1-6;
- Ball valve with thermometer on system supply and return line;
- Spacer fitting with check valve;
- Black EPP insulation (density 40 g/l).

Maximum flow rate 2400 l/h
Maximum power (Δt = 20°C) 62,7 KW
DN32 - 1"1/4 nominal diameter
Brass ball valves
Check valve in acetalic resin (POM)
Elastomer gaskets
1"1/4 F x 2" M connections

- Maximum operating pressure 6 bar
- Maximum operating temperature 120 °C
- Minimum cooling temperature 11 °C

Climate Booster
Relance Climatique
Климатический Запуск
Grup de relansare climatică
Impulso climático
Re-Start Klima

Code	Size	Pack	Carton
3229.07.02	DN 32	1	1

Optional actuator series 3232 and 3233 to be ordered separately depending on the electronic temperature control chosen.

005

3234



RD25 CONT

Direct booster unit, set up for heat metering, RD25 CONT.

High temperature unit for heating/cooling systems complete with:
- High efficiency circulator, model Wilo Yonos Para 25/1-6;
- 2 1" F ball valves on system delivery and return, each complete with thermometer;
- Check valve built into the system return ball valve (can be excluded for counter washing);
- 1" - L 130 mm polymer template on system return line for future calorimeter installation with nQ 2.5 m^3/h /Microclima HC25 model (various models available);
- Delivery probe holder well for calorimeter;
- Insulation in black EPP (density 40 g/l).

Nominal diameter: DN25 - 1"
Brass ball valves
Check valve in acetalic resin (POM)
Elastomer gaskets
1" F x 1"1/2 M connections

- Maximum operating pressure 6 bar
- Maximum operating temperature 120 °C

Direct Booster designed for metering purposes
Relance Directe prédisposée pour comptabilisation
Прямой Запуск, приспособленный для учета потребления
Grup de relansare climatică predispus pentru contorizare
Impulso directo predispuesto para contabilización
Re-Start direkt für Verbuchung vorgerüstet

Code	Size	Pack	Carton
3234.06.02	DN 25	1	1

Unit set up for installation on Multimix C32 series 3223 central manifold

For installation on DN32 manifold, provide specific reduction code 3237.06.02
For the range of meters, see the RBM Metis pricelist.

005

3235



Fixed point booster unit, set up for heat metering RF25 CONT.

Fixed point mixed unit for heating only systems, complete with:
- High efficiency circulator, model Wilo Yonos Para 25/1-6;
- 3-way mixer valve equipped with upper bypass (mixed system side) and thermostatic actuator;
- Safety contact thermostat on supply pipe (only model RF MIX B.T)
- Polymer template on system 1" - L 130 mm return line for future calorimeter installation with nQ 2.5 m^3/h/Microclima HC25 model (various models available);
- Delivery probe holder well for calorimeter;
- Insulation in black EPP (density 40 g/l).

Nominal diameter: DN25 - 1"
Brass ball valves
Acetal resin (POM) check valve
Elastomer gaskets
1" F x 1"1/2 M connections

- Maximum operating pressure 6 bar
- Maximum operating temperature 120 °C

Unit set up for installation on Multimix C32 series 3223 central manifold

For installation on DN32 manifold, provide specific reduction code 3237.06.02
For the range of meters, see the RBM Metis pricelist.
Kit components (booster module and thermostatic head) supplied in 2 separate packages.

RF25 CONT B.T. - Low Temperature Fixed Point Booster designed for metering purposes
RF25 CONT B.T. - Relance Point Fixe Basse température prédisposée pour comptabilisation
RF25 CONT B.T. - Запуск Punto Fisso Низкой Температуры, приспособленный для учета потребления
RF25 CONT B.T. - Grup de relansare cu punct fix, joasă temperatură, predispus pentru contorizare
RF25 CONT B.T. - Impulso punto fijo baja temperatura predispuesto para contabilización
RF25 CONT B.T. - Re-Start Festpunkt niedrige Temperatur für Verbuchung vorgerüstet

Code	Size	Pack	Carton
3235.06.00	DN 25	1	1

Supply inclusive of thermostatic head model TL50.
Temperature adjustment range 25÷52 °C

RF25 CONT A.T. High Temperature Fixed Point Booster designed for metering purposes
RF25 CONT A.T. - Relance Point Fixe Haute température prédisposée pour comptabilisation
RF25 CONT B.T. - Запуск Punto Fisso Высокой Температуры, приспособленный для учета потребления
RF25 CONT A.T. - Grup de relansare cu punct fix, înaltă temperatură, predispus pentru contabilizare
RF25 CONT A.T. - Impulso punto fijo alta temperatura predispuesto para contabilización
RF25 CONT A.T. - Re-Start Festpunkt hohe Temperatur für Verbuchung vorgerüstet

Code	Size	Pack	Carton
3235.06.10	DN 25	1	1

Supply inclusive of thermostatic head model TL70S.
Temperature range 40÷70°C

005

3236



RM25 CONT
Climatic booster unit, set up for heat metering.

Mixing unit with shifting temperature or heating/cooling systems, complete with:
- High efficiency circulator, model Wilo Yonos Para 25/1-6;
- 3-way mixer valve (Actuator to couple separately according to temperature control chosen - see range of actuators);
- 1" polymer template on system - L 130 mm return line for future calorimeter installation with nQ 2.5 m^3/h / Microclima HC25 model (various models available);
- Delivery probe holder well for calorimeter;
- Insulation in black EPP (density 40 g/l).

Nominal diameter: DN25 - 1"
Brass ball valves
Acetal resin (POM) check valve
Elastomer gaskets
1" F x 1"1/2 M connections

- Maximum operating pressure 6 bar
- Maximum operating temperature 120 °C

Climate booster
Relance climatique
Климатический запуск
Grup de relansare climatică
Impulso climático
Re-Start Klima

Code	Pack	Carton
3236.06.02	1	1

Unit set up for installation on Multimix C32 series 3223 central manifold

For installation on DN32 manifold, provide specific reduction code 3237.06.02
For the range of meters, see the RBM Metis pricelist.
Optional actuator series 3232 and 3233 to be ordered separately depending on the electronic temperature control chosen.

005

3237



Pair of reduction fittings for connection of DN25 units on DN32 manifold.

Pairs of reduction fitting for connection of DN25 unit on DN32 manifold
Paire d'raccords de réduction pour connexion modules DN25 sur collecteur DN32
Редукторный фитинг для соединения модулей DN25 на коллекторе DN32
Racord de reducție pentru conectare module DN25 pe colectorul DN32
Racor reducción para conexión módulos DN25 en el colector DN32
Reduzierstück für Verbindung Module DN25 am Sammler DN32

Code	Size A	Size B	Pack	Carton
3237.06.02	2" M	1"1/2 F	1	1

005

3232



Electric rotary actuator for mixer valves.

- Power supply: AC 24V
- Motor starting time: 120s
- Protection class: IP54
- Operating torque: 5Nm
- Operation: manual with push button, fixed or temporary.
- NR 230V - 3 Points - 120s - 5Nm
- NR 2V - 3 Points - 120s - 5Nm
- NR 24V - 0÷10V - 120s - 5Nm

Actuator
Servomoteur
Сервоуправление
Comandă servo
Servomando
Servosteuerung

Code	Power supply	Pack	Carton
3232.00.02	230V 3 POINTS	1	1
3232.00.12	24V 3 POINTS	1	1
3232.00.22	24V 0÷10V	1	1

005

3233



Electric rotary actuator for mixer valves equipped with built-in fixed point adjustment.

Fixed point adjustment in heating/cooling.
Including delivery probe

- NR 230V - 120s - 6Nm

Self-adjusting actuator
Servomoteur auto-régulateur
Сервоуправление с автоматич. регулировкой
Comandă servo cu autoreglare
Servomando autorregulador
Servosteuerung, selbstregelnd

Code	Power supply	Pack	Carton
3233.00.02	230V	1	1

005

124



Settable by-pass valve for total or partial overflow of thermal circuits.

Brass body.
Elastomer seals.
Stainless steel AISI 302 springs.
Shockproof ABS handwheel.
Graduated scale on knob.
Threaded line connections UNI-EN-ISO 228 (3/4" - 1" - 1"1/4).
Connections with fittings for copper pipe (Ø 22).

- Max operating temperature 110 °C
- Max operating pressure 10 Bar
- Setting range 0.1 ÷ 0.7 Bar
- Setting unit 0.1 Bar

Technical drawing on page 198

022

Angle differential pressure bypass valves
Vanne by-pass à pression différentielle en angle
Угловой байпасный клапан дифференциального давления
Supapă de by-pass cu presiune diferențială cu cot
Válvula de presión diferencial regulable, escuadra, M-H
Nebenleitungsventile mit Differentialdruck Winkel

Code	Size	Pack	Carton
124.05.00*	G 3/4"	1	10
124.06.00*	G	1	10
124.07.00*	G 1"1/4	1	5
124.22.00**	Ø 22 Ø 22	1	10

**Connections for steel pipe with union fitting*
***Connections complete with fittings for copper pipe Ø 22*


RBM
Brass

SAFETY DEVICES

DISPOSITIFS DE SÉCURITÉ
УСТРОЙСТВА БЕЗОПАСНОСТИ
DISPOZITIVE DE SIGURANȚĂ
DISPOSITIVOS DE SEGURIDAD
SICHERHEITSVORRICHTUNGEN

Certified safety relief valves	pag. 25	
Standard safety relief valves	pag. 27	
Safety units	pag. 33	
Fuel shut-off valve	pag. 35	

RBM SAFETY RELIEF VALVES

COMPLIANT WITH P.E.D. DIRECTIVE

RBM safety relief valves are devices that have to be installed on a hydraulic circuit, immediately downstream of the heat generator or on the hot water storage tanks, on the supply piping, in order to discharge any overpressure which could generate inside of them.

Safety relief valves are supplied with a pre-established calibration pressure value.
When operating, if that pressure is reached, the valve opens (the force generated by the pressure overcomes the resistance exerted by the spring), allowing part of the fluid to be discharged thus lowering pressure inside the system.

CERTIFIED SAFETY RELIEF VALVE

The **certified safety relief valves** are used in systems for the production of hot water at temperatures up to 100°C and **heat rated capacity higher than 35 kW**.
They are supplied with the bench calibration report drafted by INAIL (ex I.S.P.E.S.L.) staff who certify compliance with the "R collection" requirements.

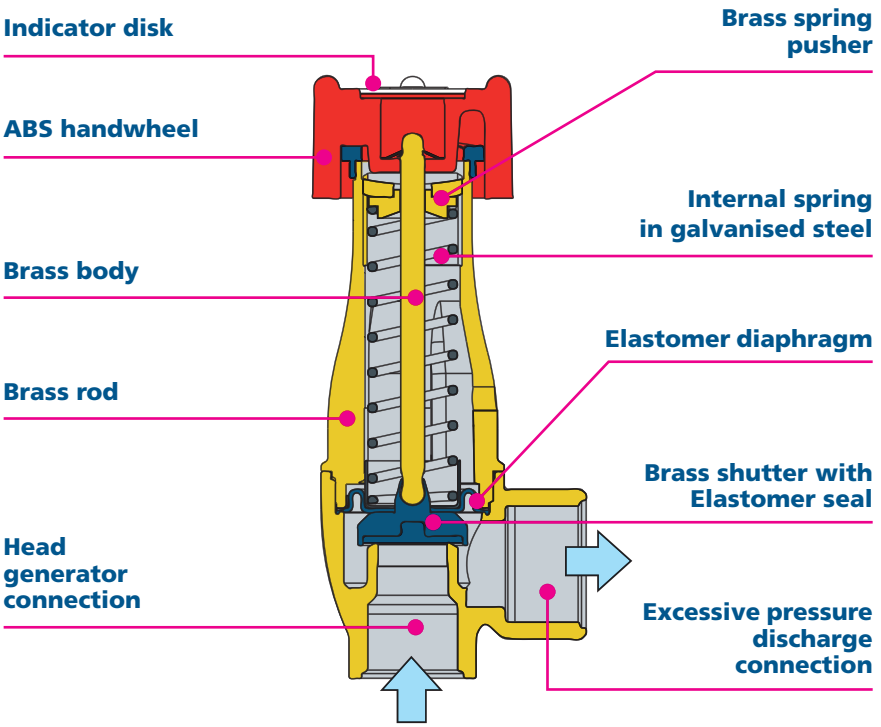

STANDARD SAFETY RELIEF VALVE

Standard safety relief valves with controlled rising are used on **heat generators with heat rated capacity lower than 35 kW and whenever the certified safety relief valve is not required.** The standard safety relief valve is also available in the version with pressure gauge to read the pressure.

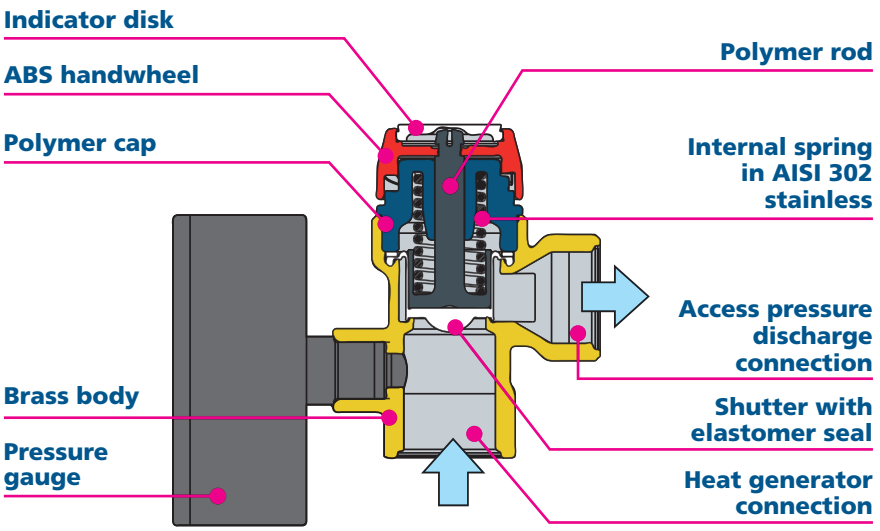

ACCESSORIES



DRAIN CHANNEL, CONSISTING OF FITTING ELBOW AND COLLECTION FUNNEL

Coupled to the safety relief valves, it sends the discharged fluid in the desired direction.

605



Calibrated and certified safety relief valve with controlled rise for fluids and neutral gases.

Brass body.
Galvanised steel spring.
Elastomer obturator seal.
Elastomer diaphragm.
Threaded angle connections FF UNI-EN-ISO 228.
Pressure setting certification at INAIL ex I.S.P.E.S.L. base.

- Max operating temperature 110 °C
- Opening overpressure +10 %
- Closing discard pressure -20 %
- Max admissible pressure PS 12 bar
- Allowed fluid water-air (Gr.2)
- kw: the Thermal power table provides the technician with a quick reference to match the chosen component to a certain heating system size. The values provided are not binding and do not therefore represent performing limits of the components (for gas, the values refer to 0°C and 1013.25 mbar).

INAIL formerly I.S.P.E.S.L.

PED

Technical drawing on page 198

Certified 1/2" x 3/4" female connection safety valve
Vanne de sécurité qualifiée raccord femelle 1/2" x 3/4"
Предохранительный клапан, внутренняя резьба 1/2" x 3/4"
Supapă de siguranță calificată cu prindere mamă 1/2" x 3/4"
Válvula de seguridad cualificada conexión hembra 1/2" x 3/4"
Geprüftes Sicherheitsventil Aufsteckanschluss 1/2" x 3/4"

Code	Calibration (bar)	Max. Pwr. (kW)	Pack	Carton
605.04.00	2,25	101	1	20
605.04.10	2,50	108	1	20
605.04.20	2,70	114	1	20
605.04.30	3,00	124	1	20
605.04.40	3,50	138	1	20
605.04.50	4,00	156	1	20
605.04.60	4,50	167	1	20
605.04.70	5,00	184	1	20
605.04.80	5,40	197	1	20
605.04.90	6,00	217	1	20

Certified 3/4" x 1" female connection safety valve
Vanne de sécurité qualifiée raccord femelle 3/4" x 1"
Предохранительный клапан, внутренняя резьба 3/4" x 1"
Supapă de siguranță calificată cu prindere mamă 3/4" x 1"
Válvula de seguridad cualificada conexión hembra 3/4" x 1"
Geprüftes Sicherheitsventil Aufsteckanschluss 3/4" x 1"

Code	Calibration (bar)	Max. Pwr. (kW)	Pack	Carton
605.05.00	2,25	195	1	20
605.05.10	2,50	209	1	20
605.05.20	2,70	220	1	20
605.05.30	3,00	239	1	20
605.05.40	3,50	266	1	20
605.05.50	4,00	300	1	20
605.05.60	4,50	323	1	20
605.05.70	5,00	355	1	20
605.05.80	5,40	380	1	20
605.05.90	6,00	418	1	20

Certified 1" x 1"1/4 female connection safety valve
Vanne de sécurité qualifiée raccord femelle 1" x 1"1/4
Предохранительный клапан, внутренняя резьба 1" x 1"1/4
Supapă de siguranță calificată cu prindere mamă 1" x 1"1/4
Válvula de seguridad cualificada conexión hembra 1" x 1"1/4
Geprüftes Sicherheitsventil Aufsteckanschluss 1" x 1"1/4

Code	Calibration (bar)	Max. Pwr. (kW)	Pack	Carton
605.06.00	2,25	353	1	4
605.06.10	2,50	377	1	4
605.06.20	2,70	396	1	4
605.06.30	3,00	432	1	4
605.06.40	3,50	481	1	4
605.06.50	4,00	542	1	4
605.06.60	4,50	583	1	4
605.06.70	5,00	641	1	4
605.06.80	5,40	685	1	4
605.06.90	6,00	754	1	4

Certified 1"1/4 x 1"1/2 female connection safety valve
Vanne de sécurité qualifiée raccord femelle 1"1/4x 1"1/2
Предохранительный клапан, внутренняя резьба 1"1/4 x 1"1/2
Supapă de siguranță calificată cu prindere mamă 1"1/4 x 1"1/2
Válvula de seguridad cualificada conexión hembra 1"1/4 x 1"1/2
Geprüftes Sicherheitsventil Aufsteckanschluss 1"1/4 x 1"1/2

Code	Calibration (bar)	Max. Pwr. (kW)	Pack	Carton
605.07.00	2,25	385	1	4
605.07.10	2,50	412	1	4
605.07.20	2,70	433	1	4
605.07.30	3,00	472	1	4
605.07.40	3,50	525	1	4
605.07.50	4,00	592	1	4
605.07.60	4,50	636	1	4
605.07.70	5,00	700	1	4
605.07.80	5,40	748	1	4
605.07.90	6,00	824	1	4

001

666



Accessories for safety relief valve. Drain channel composed of fitting elbow and collection funnel.

Brass body.
Channel connections MM UNI-EN-ISO 228.
Funnel connections FF UNI-EN-ISO 228.

- Max operating temperature 110 °C

Technical drawing on page 199

Sold together
elbow + collection funnel.

001

Drain channel
Conduite d'évacuation
Сливной комплект
Sistem de dirijare de evacuare
Embudo y curva para descarga
Entladeförderer

Code	Size	Pack	Carton
666.05.00	G 3/4"	1	20
666.06.00	G 1"	1	1
666.07.00	G 1"1/4	1	1
666.08.00	G 1"1/2	1	1

351



Standard safety relief valve with controlled rise for fluids and neutral gases.

Brass body.
Stainless steel AISI 302 spring.
Elastomer obturator seal.
Elastomer diaphragm.
Threaded angle connections FF UNI-EN-ISO 228.

- Max admissible pressure PS 12 bar
- Max operating temperature 120 °C
- Orifice diameter 15mm
- Opening overpressure +10%
- Closing discard pressure -20%
- Allowed fluid water-air (Gr.2)

PED

Technical drawing on page 199

Standard safety relief valve 1/2" x 1/2" female connection
Soupape de sécurité ordinaire raccord femelle 1/2" x 1/2"
Обычный предохранительный клапан, внутренняя резьба 1/2" x 1/2"
Supapă de siguranță ordinară prindere tip mamă 1/2" x 1/2"
Válvula de seguridad ordinaria 1/2"H x 1/2"H
Normales Sicherheitsventil Aufsteckanschluss 1/2" x 1/2"

Code	Calibration (bar)	Max. Pwr. (kW)	Pack	Carton
351.04.10	1,50	48	1	50
351.04.20	2,00	55	1	50
351.04.30	2,50	68	1	50
351.04.40	3,00	75	1	50
351.04.50	3,50	83	1	50
351.04.60	4,00	96	1	50
351.04.70	4,50	103	1	50
351.04.80	5,00	109	1	50
351.04.90	6,00	128	1	50
351.04.71	7,00	148	1	50
351.04.81	8,00	166	1	50
351.04.11	10,00	181	1	50

Standard safety relief valve 3/4" x 3/4" female connection
Soupape de sécurité ordinaire raccord femelle 3/4" x 3/4"
Обычный предохранительный клапан, внутренняя резьба 3/4" x 3/4"
Supapă de siguranță ordinară prindere tip mamă 3/4" x 3/4"
Válvula de seguridad ordinaria 3/4"H x 3/4"H
Normales Sicherheitsventil Aufsteckanschluss 3/4" x 3/4"

Code	Calibration (bar)	Max. Pwr. (kW)	Pack	Carton
351.05.10	1,50	48	1	50
351.05.20	2,00	55	1	50
351.05.30	2,50	68	1	50
351.05.40	3,00	75	1	50
351.05.50	3,50	83	1	50
351.05.60	4,00	96	1	50
351.05.70	4,50	103	1	50
351.05.80	5,00	109	1	50
351.05.90	6,00	128	1	50
351.05.71	7,00	148	1	50
351.05.81	8,00	166	1	50
351.05.11	10,00	181	1	50

002

352



Standard safety relief valve with controlled rise for fluids and neutral gases.

Brass body.
Stainless steel AISI 302 spring.
Elastomer obturator seal.
Elastomer diaphragm.
Threaded angle connections MF UNI-EN-ISO 228.

- Max admissible pressure PS 12 bar
- Max operating temperature 120 °C
- Orifice diameter 15mm
- Opening overpressure +10%
- Closing discard pressure -20%
- Allowed fluid water-air (Gr.2)

PED

Technical drawing on page 199

Standard safety relief valve male 1/2" x female 1/2" connection
Soupape de sécurité ordinaire raccord mâle 1/2" x femelle 1/2"
Обычный предохранительный клапан, наружная резьба 1/2" x внутренняя 1/2"
Supapă de siguranță ordinară prindere tip tată 1/2" x de tip mamă 1/2"
Válvula de seguridad ordinaria 1/2"M x 1/2"H
Normales Sicherheitsventil Steckanschluss 1/2" x Aufsteckanschluss 1/2"

Code	Calibration (bar)	Max. Pwr. (kW)	Pack	Carton
352.04.10	1,50	48	1	50
352.04.20	2,00	55	1	50
352.04.30	2,50	68	1	50
352.04.40	3,00	75	1	50
352.04.50	3,50	83	1	50
352.04.60	4,00	96	1	50
352.04.70	4,50	103	1	50
352.04.80	5,00	109	1	50
352.04.90	6,00	128	1	50
352.04.71	7,00	148	1	50
352.04.81	8,00	166	1	50
352.04.11	10,00	181	1	50

Standard safety relief valve male 1/2" x female 3/4" connection
Soupape de sécurité ordinaire raccord mâle 1/2" x femelle 3/4"
Обычный предохранительный клапан , наружная резьба 1/2" x внутренняя 3/4"
Supapă de siguranță ordinară prindere tip tată 1/2" x de tip mamă 3/4"
Válvula de seguridad ordinaria con manómetro 1/2"M x 3/4"H
Normales Sicherheitsventil Steckanschluss 1/2" x Aufsteckanschluss 3/4"

Code	Calibration (bar)	Max. Pwr. (kW)	Pack	Carton
352.05.10	1,50	48	1	50
352.05.20	2,00	55	1	50
352.05.30	2,50	68	1	50
352.05.40	3,00	75	1	50
352.05.50	3,50	83	1	50
352.05.60	4,00	96	1	50
352.05.70	4,50	103	1	50
352.05.80	5,00	109	1	50
352.05.90	6,00	128	1	50
352.05.71	7,00	148	1	50
352.05.81	8,00	166	1	50
352.05.11	10,00	181	1	50

002

353



Standard safety relief valve with controlled rise for fluids and neutral gases, complete with dial pressure gauge.

Brass body.
Stainless steel AISI 302 spring.
Elastomer obturator seal.
Elastomer diaphragm.
Threaded angle connections FF UNI-EN-ISO 228.
F1/4" pressure gauge connection (UNI-EN-ISO 228).

- Max admissible pressure PS 12 bar
- Max operating temperature 120 °C
- Orifice diameter 15mm
- Opening overpressure +10%
- Closing discard pressure -20%
- Pressure gauge scale 0 ÷ 4 Bar for valves < 4 Bar
- Pressure gauge scale 0 - 10 bar for valves > 4 bar - Permitted fluid water-air (Un.2)

PED

Technical drawing on page 199

Standard safety relief valve 1/2" x 1/2" female connection with pressure gauge
Soupape de sécurité ordinaire raccord femelle 1/2" x 1/2" avec manomètre
Обычный предохранительный клапан с манометром, внутренняя резьба 1/2"x 1/2"
Supapă de siguranță ordinară prindere tip mamă 1/2"x 1/2" cu manometru
Válvula de seguridad ordinaria con manómetro 1/2"H x 1/2"H
Normales Sicherheitsventil Aufsteckanschluss 1/2"x 1/2" mit Manometer

Code	Calibration (bar)	Max. Pwr. (kW)	Pack	Carton
353.04.10	1,50	48	1	48
353.04.20	2,00	55	1	48
353.04.30	2,50	68	1	48
353.04.40	3,00	75	1	48
353.04.50	3,50	83	1	48
353.04.60	4,00	96	1	48
353.04.70	4,50	103	1	48
353.04.80	5,00	109	1	48
353.04.90	6,00	128	1	48
353.04.71	7,00	148	1	48
353.04.81	8,00	166	1	48
353.04.11	10,00	181	1	48

Standard safety relief valve 3/4" x 3/4" female connection with pressure gauge
Soupape de sécurité ordinaire raccord femelle 3/4" x 3/4" avec manomètre
Обычный предохранительный клапан с манометром, внутренняя резьба 3/4"x 3/4"
Supapă de siguranță ordinară prindere tip mamă 3/4"x 3/4" cu manometru
Válvula de seguridad ordinaria con manómetro 3/4"H x 3/4"H
Normales Sicherheitsventil Aufsteckanschluss 3/4"x 3/4" mit Manometer

Code	Calibration (bar)	Max. Pwr. (kW)	Pack	Carton
353.05.10	1,50	48	1	48
353.05.20	2,00	55	1	48
353.05.30	2,50	68	1	48
353.05.40	3,00	75	1	48
353.05.50	3,50	83	1	48
353.05.60	4,00	96	1	48
353.05.70	4,50	103	1	48
353.05.80	5,00	109	1	48
353.05.90	6,00	128	1	48
353.05.71	7,00	148	1	48
353.05.81	8,00	166	1	48
353.05.11	10,00	181	1	48

002

354



Standard safety relief valve with controlled rise for fluids and neutral gases, complete with dial pressure gauge.

Brass body.
Stainless steel AISI 302 spring.
Elastomer obturator seal.
Elastomer diaphragm.
Threaded angle connections MF UNI-EN-ISO 228.
F1/4" pressure gauge connection (UNI-EN-ISO 228).

- Max admissible pressure PS 12 bar
- Max operating temperature 120 °C
- Orifice diameter 15mm
- Opening overpressure +10%
- Closing discard pressure -20%
- Pressure gauge scale 0 ÷ 4 Bar for valves < 4 Bar
- Pressure gauge scale 0 ÷ 10 Bar for valves > 4 Bar
- Allowed fluid water-air (Gr.2)

PED

Technical drawing on page 199

Standard safety relief valve male 1/2" x female 1/2" connection with pressure gauge
Soupape de sécurité ordinaire raccord mâle 1/2" x femelle 1/2" avec manomètre
Обычный предохранительный клапан с манометром, наружная резьба 1/2" x внутренняя 1/2"
Supapă de siguranţă ordinară prindere tip tată 1/2" x de tip mamă 1/2" cu manometru
Válvula de seguridad ordinaria con manómetro 1/2"M x 1/2"H
Normales Sicherheitsventil Steckanschluss 1/2" x Aufsteckanschluss 1/2" mit Manometer

Code	Calibration (bar)	Max. Pwr. (kW)	Pack	Carton
354.04.10	1,50	48	1	48
354.04.20	2,00	55	1	48
354.04.30	2,50	68	1	48
354.04.40	3,00	75	1	48
354.04.50	3,50	83	1	48
354.04.60	4,00	96	1	48
354.04.70	4,50	103	1	48
354.04.80	5,00	109	1	48
354.04.90	6,00	128	1	48
354.04.71	7,00	148	1	48
354.04.81	8,00	166	1	48
354.04.11	10,00	181	1	48

002

2201



T&P combined safety valve.

Brass body.
Stainless steel AISI 302 spring.
Elastomer obturator seal.
Elastomer diaphragm.
Threaded connections M UNI-EN-ISO 228.
Copper pipe end connection.

- Max admissible pressure PS 12 bar
- Temperature calibration 90+2 °C

PED

T&P combined safety valve 1/2" x Ø 15
Soupape de sécurité combinée T&P 1/2" x Ø 15
Комбинированный предохранительный клапан T&P 1/2" x Ø 15
Supapă de siguranţă combinată T&P 1/2" x Ø 15
Válvula de seguridad combinada T&P 1/2" x Ø 15
Kombiniertes Sicherheitsventil T&P 1/2" x Ø 15

Code	Calibration (bar)	Max. Pwr. (kW)	Probe length	Pack	Carton
2201.04.25	2,50	10	4"	1	50
2201.04.30	3,00	10	4"	1	50
2201.04.40	4,00	10	4"	1	50
2201.04.60	6,00	10	4"	1	50
2201.04.70	7,00	10	4"	1	50
2201.04.10	10,00	10	4"	1	50
2201.14.25	2,50	10	8"	1	40
2201.14.30	3,00	10	8"	1	40
2201.14.40	4,00	10	8"	1	40
2201.14.60	6,00	10	8"	1	40
2201.14.70	7,00	10	8"	1	40
2201.14.10	10,00	10	8"	1	40

T&P combined safety valve 3/4" x Ø 22
Soupape de sécurité combinée T&P 3/4" x Ø 22
Комбинированный предохранительный клапан T&P 3/4" x Ø 22
Supapă de siguranţă combinată T&P 3/4" x Ø 22
Válvula de seguridad combinada T&P 3/4" x Ø 22
Kombiniertes Sicherheitsventil T&P 3/4" x Ø 22

Code	Calibration (bar)	Max. Pwr. (kW)	Probe length	Pack	Carton
2545.05.30	3,00	25	4"	1	50
2545.05.40	4,00	25	4"	1	50
2545.05.60	6,00	25	4"	1	50
2545.05.70	7,00	25	4"	1	50
2545.05.10	10,00	25	4"	1	50
2545.15.30	3,00	25	8"	1	40
2545.15.40	4,00	25	8"	1	40
2545.15.60	6,00	25	8"	1	40
2545.15.70	7,00	25	8"	1	40
2545.15.10	10,00	25	8"	1	40

002

2809



Standard safety relief valve with controlled rise for water outlet; suitable for sanitary installations.

Brass body.
Stainless steel AISI 302 spring.
Elastomer obturator seal.
Elastomer diaphragm.
Threaded angle connections FF UNI-EN-ISO 228.

- Max admissible pressure PS 12 bar
- Max operating temperature 100 °C
- Opening overpressure +10%
- Closing discard pressure -20%
- Allowed fluid water-air (Gr.2)

PED

Safety valve for sanitary installations.

Standard 1/2" x 3/4" female connection safety valve
Vanne de sécurité ordinaire raccord femelle 1/2" x 3/4"
Обычный предохранительный клапан, внутренняя резьба 1/2" x 3/4"
Supapă de siguranță standard cu prindere mamă 1/2" x 3/4"
Válvula de seguridad ordinaria conexión hembra 1/2" x 3/4"
Normales Sicherheitsventil Aufsteckanschluss 1/2" x 3/4"

Code	Calibration (bar)	Max. Pwr. (kW)	Pack	Carton
2809.04.60	4,00	75	1	45
2809.04.90	6,00	75	1	45
2809.04.81	8,00	75	1	45
2809.04.11	10,00	75	1	45

Standard 3/4" x 1" female connection safety valve
Vanne de sécurité ordinaire raccord femelle 3/4" x 1"
Обычный предохранительный клапан, внутренняя резьба 3/4" x 1"
Supapă de siguranță standard cu prindere mamă 3/4" x 1"
Válvula de seguridad ordinaria conexión hembra 3/4" x 1"
Normales Sicherheitsventil Aufsteckanschluss 3/4" x 1"

Code	Calibration (bar)	Max. Pwr. (kW)	Pack	Carton
2809.05.60	4,00	150	1	20
2809.05.90	6,00	150	1	20
2809.05.81	8,00	150	1	20
2809.05.11	10,00	150	1	20

Standard female connection 1" x 1"1/4 safety valve
Vanne de sécurité ordinaire raccord femelle 1" x 1"1/4
Обычный предохранительный клапан, внутренняя резьба 1" x 1"1/4
Supapă de siguranță standard cu prindere mamă 1" x 1"1/4
Válvula de seguridad ordinaria conexión hembra 1" x 1"1/4
Normales Sicherheitsventil Aufsteckanschluss 1" x 1"1/4

Code	Calibration (bar)	Max. Pwr. (kW)	Pack	Carton
2809.06.60	4,00	250	1	20
2809.06.90	6,00	250	1	20
2809.06.81	8,00	250	1	20
2809.06.11	10,00	250	1	20

Standard female connection 1"1/4 x 1"1/2 safety valve
Vanne de sécurité ordinaire raccord femelle 1"1/4 x 1"1/2
Обычный предохранительный клапан, внутренняя резьба 1"1/4 x 1"1/2
Supapă de siguranță standard cu prindere mamă 1"1/4 x 1"1/2
Válvula de seguridad ordinaria conexión hembra 1"1/4 x 1"1/2
Normales Sicherheitsventil Aufsteckanschluss 1"1/4 x 1"1/2

Code	Calibration (bar)	Max. Pwr. (kW)	Pack	Carton
2809.07.60	4,00	350	1	10
2809.07.90	6,00	350	1	10
2809.07.81	8,00	350	1	10
2809.07.11	10,00	350	1	10

002

811



Standard safety relief valve with controlled rise for water outlet; suitable for heating installations.

Brass body.
Stainless steel AISI 302 spring.
Elastomer obturator seal.
Elastomer diaphragm.
Threaded angle connections FF UNI-EN-ISO 228.

- Max admissible pressure PS 12 bar
- Max operating temperature 120 °C
- Opening overpressure +10%
- Closing discard pressure -20%
- Allowed fluid water-air (Gr.2)

PED

Safety valve for heating installations.

Standard 1/2" x 3/4" female connection safety valve
Vanne de sécurité ordinaire raccord femelle 1/2" x 3/4"
Обычный предохранительный клапан, внутренняя резьба 1/2" x 3/4"
Supapă de siguranță standard cu prindere mamă 1/2" x 3/4"
Válvula de seguridad ordinaria conexión hembra 1/2" x 3/4"
Normales Sicherheitsventil Aufsteckanschluss 1/2" x 3/4"

Code	Calibration (bar)	Max. Pwr. (kW)	Pack	Carton
811.14.30	2,50	50	1	45
811.14.40	3,00	50	1	45

Standard 3/4" x 1" female connection safety valve
Vanne de sécurité ordinaire raccord femelle 3/4" x 1"
Обычный предохранительный клапан, внутренняя резьба 3/4" x 1"
Supapă de siguranță standard cu prindere mamă 3/4" x 1"
Válvula de seguridad ordinaria conexión hembra 3/4" x 1"
Normales Sicherheitsventil Aufsteckanschluss 3/4" x 1"

Code	Calibration (bar)	Max. Pwr. (kW)	Pack	Carton
811.15.30	2,50	100	1	20
811.15.40	3,00	100	1	20

Standard female connection 1" x 1"1/4 safety valve
Vanne de sécurité ordinaire raccord femelle 1" x 1"1/4
Обычный предохранительный клапан, внутренняя резьба 1" x 1"1/4
Supapă de siguranță standard cu prindere mamă 1" x 1"1/4
Válvula de seguridad ordinaria conexión hembra 1" x 1"1/4
Normales Sicherheitsventil Aufsteckanschluss 1" x 1"1/4

Code	Calibration (bar)	Max. Pwr. (kW)	Pack	Carton
811.16.30	2,50	200	1	20
811.16.40	3,00	200	1	20

Standard female connection 1"1/4 x 1"1/2 safety valve
Vanne de sécurité ordinaire raccord femelle 1"1/4 x 1"1/2
Обычный предохранительный клапан, внутренняя резьба 1"1/4 x 1"1/2
Supapă de siguranță standard cu prindere mamă 1"1/4 x 1"1/2
Válvula de seguridad ordinaria conexión hembra 1"1/4 x 1"1/2
Normales Sicherheitsventil Aufsteckanschluss 1"1/4 x 1"1/2

Code	Calibration (bar)	Max. Pwr. (kW)	Pack	Carton
811.17.30	2,50	350	1	10
811.17.40	3,00	350	1	10

002

3603



Threaded instrument holder manifold
Collecteur porte-instruments fileté
Резьбовой приборный коллектор
Colector pentru instrumente cu filet
Colector portaherramientras roscado
Gerätehalter-Kollektor mit Gewinde

Code	Size	Safety valve coupling	Pack	Carton
3603.07.00	1"1/4	3/4"	1	1
3603.08.00	1"1/2	1"	1	1
3603.09.00	2"	1"	1	1

Note: Certified safety relief valve not included.

Threaded instrument holder manifold with union couplings.

With the following accessories (not preassembled when supplied):
G 1/2" immersion thermostat with manual reset;
G 1/2" safety pressure switch with manual reset;
G 1/2" low pressure switch with manual reset;
Thermometer Ø 80 mm – 0 ÷ 120°C radial connection with G 1/2" thermowell;
3-way G 1/4" valve with flange for sample pressure gauge;
G 1/4" damper loop;
G 1/4" radial connection pressure gauge – scale 0÷6 Bar (available versions with 0÷4 bar scale Code 626.02.00 and 0÷10 bar Code 626.02.20 – see spare parts price list);
Well for fuel shut-off valve;
G 1/2" control probe holder (INAIL formerly I.S.P.E.S.L.);
Connection for safety valve.

- Max operating temperature 110 °C
- Max. operating pressure 10 bar
- Allowed fluid water and water+glycol 30 %

INAIL formerly I.S.P.E.S.L.

Stainless steel instrument holder manifold version available, compliant with It. Ministerial Decree 174/04.
Order code 3603.0X.50

002

3603



Flanged instrument holder manifold
Collecteur porte-instruments à brides
Фланцевый приборный коллектор
Colector pentru instrumente cu flanşă
Colector portaherramientras con brida
Gerätehalter-Kollektor mit Flansch

Code	Size	Safety valve coupling	Pack	Carton
3603.09.10	DN 50	1"	1	1
3603.10.10	DN 65	1"1/4 - 1"	1	1
3603.11.10	DN 80	1"1/4 - 1"1/4	1	1

Note: Certified safety relief valve not included.

Flanged instrument holder manifold.

With the following accessories (not preassembled when supplied):
G 1/2" immersion thermostat with manual reset;
G 1/2" safety pressure switch with manual reset;
G 1/2" low pressure switch with manual reset;
Thermometer Ø 80 mm – 0 ÷ 120°C radial connection with G 1/2" thermowell;
3-way G 1/4" valve with flange for sample pressure gauge;
G 1/4" damper loop;
G 1/4" radial connection pressure gauge – scale 0÷6 Bar (available versions with 0÷4 bar scale Code 626.02.00 and 0÷10 bar Code 626.02.20 – see spare parts price list);
Well for fuel shut-off valve;
G 1/2" control probe holder (INAIL formerly I.S.P.E.S.L.);
Connection for safety valve (2 connections for DN65 and DN80).

- Max operating temperature 110 °C
- Max. operating pressure 10 bar
- Allowed fluid water and water+glycol 30 %

INAIL formerly I.S.P.E.S.L.

Stainless steel instrument holder manifold version available, compliant with It. Ministerial Decree 174/04.
Order code 3603.XX.60

002

47



Safety unit
Unité de sécurité
Предохранительное устройство
Unitate de siguranță
Unidad de seguridad
Sicherheitseinheit

Code	Size	Pack	Carton
47.06.10	1"	1	4

Standard safety valve code 352.04.40 compliant with PED directive - CE1115

Safety unit.

- Valve pressure setting 3 Bar
- Max operating temperature 90 °C
- Pressure gauge scale 0 - 6 Bar
- S.V. orifice diameter 15 mm
- Max capacity 75 Kw

- Consisting of:
- Automatic air vent valve + check valve
- Standard safety valve with controlled increase with discharge F G1/2"
- Pressure gauge dial with radial connection + check valve

002

616



Fuel shutoff valve, INAIL approved for natural gas, LPG, diesel oil, fuel oil, positive action with manual reset.

Nickel brass body.
Sensitive element in copper.
Capillary length 5 m.
M 1/2" well connection (UNI ISO 7/1).
Threaded connections FF UNI ISO 7/1.

- Max operating pressure 6 Bar
- Max ambient temperature +50 °C
- Setting temperature 97 ± 3 °C
- Reset temperature 87 °C

PED

INAIL formerly I.S.P.E.S.L.

003

Fuel shut-off valve
Vanne d'arrêt combustible
Резьбовой отсекающий топливный клапан
Supapă de interceptare combustibil
Válvula de interceptación de rearme manual para combustible
Absperrventil Brennstoff mit Gewinde

Code	Size	Pack	Carton
616.04.00	1/2"	1	5
616.05.00	3/4"	1	5
616.06.00	1"	1	5
616.07.00	1"1/4	1	5
616.08.00	1"1/2	1	5
616.09.00	2"	1	5


RBM
Brass

HYDRAULIC BALANCING DEVICES

DISPOSITIFS POUR L'ÉQUILIBRAGE HYDRAULIQUE
УСТРОЙСТВА ДЛЯ ГИДРАВЛИЧЕСКОЙ БАЛАНСИРОВКИ
DISPOZITIVE PENTRU ECHILIBRARE HIDRAULICĂ
DISPOSITIVOS PARA EL BALANCE HIDRÁULICO
VORRICHTUNGEN ZUM HYDRAULIKAUSGLEICH

Balancing valves	pag. 38	
Flow measuring stub pipes	pag. 39	
Automatic flow control valves	pag. 40	
Pressure independent control valves	pag. 42	
Differential pressure control and balancing valves	pag. 44	
Tools and devices	pag. 45	

619



Balanflow

Threaded balancing valve, complete with knob indicating the number of turns, and "memory stop" function.

Body and contact parts in brass.
Seals in FKM.
Threaded connections FF UNI-EN-ISO 228.

- Max operating pressure 20 Bar
- Allowed temperatures -30 ÷ +120 °C
- Equipercentage regulation
- Allowed fluid water and water+glycol 50 %
- Pressure gauge plugs connection G1/8"

Threaded balancing valve
Vanne d'équilibrage filetée
Уравновешивающий клапан резьбовой
Supapă de echilibrare cu filet
Válvula de balance roscada
Ausgleichsventil mit Gewinde

Code	Size	Kv (m³/h)	Pack	Carton
619.03.50	G 3/8"	2,35	1	6
619.04.50	G 1/2"	3,35	1	6
619.05.50	G 3/4"	4,00	1	6
619.06.50	G 1"	11,20	1	6
619.07.50	G 1"1/4	13,40	1	6
619.08.50	G 1"1/2	19,00	1	6
619.09.50	G 2"	28,40	1	6

Technical drawing on page 199

Designed for the insertion of pressure plugs for indirect flow rate reading.

To provide for a pair of pressure plugs accessories code. 621.01.50

004

619



Balanflow

Flanged balancing valve, complete with knob indicating the number of turns, and "memory stop" function.

Cast-iron body.
Elastomer seals.
Flanged connections PN 16.

- Max operating pressure 16 Bar
- Allowed temperatures -10 ÷ +130 °C
- Equipercentage regulation
- Allowed fluid water and water+glycol 50 %
- Pressure gauge plugs connection G1/8"

Flanged balancing valve
Vanne d'équilibrage à bride
Уравновешивающий клапан фланцевый
Supapă de echilibrare cu flanșă
Válvula de balance embridada
Ausgleichsventil mit Flansch

Code	Size	Kv (m³/h)	Pack	Carton
619.10.60	DN 65	93,40	1	1
619.11.60	DN 80	122,30	1	1
619.13.60	DN 100	200,00	1	1
619.14.60	DN 125	304,40	1	1
619.15.60	DN 150	400,80	1	1
619.17.60	DN 200	685,60	1	1
619.19.60	DN 250	952,30	1	1
619.21.60	DN 300	1380,20	1	-

Valve provided with two pressure plugs.

Flange suitable for coupling to counter-flange UNI EN 1092-1.

004

1147

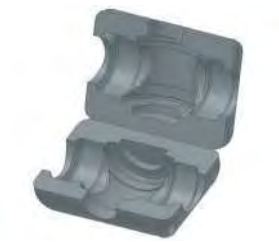

Thermal insulation made up from expanded polyethylene half-bearings with external antiscratch coating.

Half-bearings fixed with double-sided adhesive tape already applied.

- Fire behaviour class1
- Density 33 kg/m³
- Max operating temperature -40 ÷ +90 °C

Balanflow valve thermal shell
Coque thermique vanne Balanflow
Теплоизоляционный кожух для балансировочного клапана Balanflow
Carcasă termică supapa Balanflow
Aislamiento térmico para válvula de equilibrado Balanflow
Thermoschale Ventil Balanflow

Code	Size	Pack	Carton
1147.03.00	3/8"	10	10
1147.04.00	1/2"	10	10
1147.05.00	3/4"	10	10
1147.06.00	1"	10	10
1147.07.00	1"1/4	5	5
1147.08.00	1"1/2	5	5
1147.09.00	2"	5	5

041

620



Threaded measuring stub pipe for indirect reading of transit flow rate, complete with quick coupling pressure plugs.

Body and pressure plugs in brass.
Elastomer pressure plugs internal seals.
Threaded connections MF UNI-EN-ISO 228.

- Max operating pressure 20 Bar
- Allowed temperatures -30 ÷ +120 °C
- Allowed fluid water and water+glycol 50 %
- Pressure gauge plugs connection G 1/8"

Technical drawing on page 200

Threaded flow rate measuring stub pipe
Segment de mesure de débit fileté
Резьбовой патрубок для измерения расхода
Vană de măsurare a debitului filetată
Tronco medidor de caudal, con tomas de presión, conexiones roscadas
Gewindemessstab Durchflussmenge

Code	Size	Kv (m³/h)	Pack	Carton
620.04.90	G 1/2" LF	1,02	1	1
620.04.50	G 1/2"	2,85	1	1
620.05.50	G 3/4"	5,80	1	1
620.06.50	G 1"	8,80	1	1
620.07.50	G 1"1/4	20,10	1	1
620.08.50	G 1"1/2	31,20	1	1
620.09.50	G 2"	69,90	1	1

004

620



Flanged measuring stub pipe for indirect reading of transit flow rate, complete with quick coupling pressure plugs.

Grey cast-iron body.
Brass pressure plugs.
Elastomer pressure plugs internal seals.
Wafer flanged connections PN 16.

- Max operating pressure 16 Bar
- Allowed temperatures -10 ÷ +120 °C
- Allowed fluid water and water+glycol 50 %
- Pressure gauge plugs connection G 1/4"

Technical drawing on page 199

Wafer assembly between two flanges PN16.

Flanged flow rate measuring stub pipe
Segment de mesure de débit à bride
Фланцевый патрубок для измерения расхода
Vană de măsurare a debitului cu flanșă
Tronco medidor de caudal, con tomas de presión, para instalación entre bridas
Geflanschter Messstab Durchflussmenge

Code	Size	Kv (m³/h)	Pack	Carton
620.10.00	DN 65	93,00	1	1
620.11.00	DN 80	126,00	1	1
620.13.00	DN 100	244,00	1	1
620.14.00	DN 125	415,00	1	1
620.15.00	DN 150	540,00	1	1
620.17.00	DN 200	1010,00	1	1
620.19.00	DN 250	1450,00	1	1
620.21.00	DN 300	2400,00	1	1

004

2873



Automatic flow control valve with externally adjustable cartridge.

It allows to adjust the rate to the desired value, by acting on the cartridge through suitable adjusting device.
Such operation does not involve the valve.

Brass body.
Polymer cartridge with elastomer diaphragm.
Indicator with graduated scale.
Threaded connections FF UNI-EN-ISO 228.

- Max operating pressure 16 Bar
- Allowed temperatures -20 ÷ +120 °C
- Allowed fluid water and water+glycol 50%
- Pressure gauge plugs connection G1/8"

Replaceable cartridge. See spare parts pricelist.
Cartridges are available in different colours for both the pressure field and flow rate to be immediately identified.

For flow rate adjustment use accessory spanner code 2961.00.02 (see page 46).

Automatic flow control valve
Vanne d'equilibrage automatique
Автоматический стабилизатор напора
Stabilizator automat de debit
Estabilizador automático de caudal
Automatischer Stabilisator Durchflussmenge

Code	Size	DP (kPa)	Flow rate (m^3/h)	Cartridge	Pack	Carton
2873.04.10	1/2"	17 - 210	0,100 - 0,412	B	1	1
2873.04.20	1/2"	17 - 210	0,157 - 0,609	G	1	1
2873.04.30	1/2"	17 - 200	0,275 - 0,825	RW	1	1
2873.04.40	1/2"	30 - 400	0,406 - 1,270	RG	1	1
2873.05.10	3/4"	17 - 210	0,100 - 0,412	B	1	1
2873.05.20	3/4"	17 - 210	0,157 - 0,609	G	1	1
2873.05.30	3/4"	17 - 200	0,275 - 0,825	RW	1	1
2873.05.40	3/4"	30 - 400	0,406 - 1,270	RG	1	1
2873.06.10	1"	17 - 210	0,100 - 0,412	B	1	1
2873.06.20	1"	17 - 210	0,157 - 0,609	G	1	1
2873.06.30	1"	17 - 200	0,275 - 0,825	RW	1	1
2873.06.40	1"	30 - 400	0,406 - 1,270	RG	1	1

B = Black
G = Green
RW = Red - b. white
RG = Red - b. grey

004

2874



Automatic flow control valve with externally adjustable cartridge, provided with pressure plugs.

It allows to adjust the rate to the desired value, by acting on the cartridge through suitable adjusting device.
Such operation does not involve the valve.

Brass body.
Polymer cartridge with elastomer diaphragm.
Indicator with graduated scale.
Threaded connections FF UNI-EN-ISO 228.

- Max operating pressure 16 Bar
- Allowed temperatures -20 ÷ +120 °C
- Allowed fluid water and water+glycol 50%
- Pressure gauge plugs connection G1/8"

Replaceable cartridge. See spare parts pricelist.
Cartridges are available in different colours for both the pressure field and flow rate to be immediately identified.
Valve provided with two pressure plugs.

For flow rate adjustment use accessory spanner code 2961.00.02 (see page 46).

Automatic flow control valve provided with pressure taps
Vanne d'equilibrage automatique dotée de prises de pression
Автоматический стабилизатор напора с приёмниками давления
Stabilizator automat de debit dotat cu prize de presiune
Estabilizador automático de caudal dotado de tomas de presión
Automatischer Stabilisator Durchflussmenge mit Druckanschlüssen

Code	Size	DP (kPa)	Flow rate (m^3/h)	Cartridge	Pack	Carton
2874.04.10	1/2"	17 - 210	0,100 - 0,412	B	1	1
2874.04.20	1/2"	17 - 210	0,157 - 0,609	G	1	1
2874.04.30	1/2"	17 - 200	0,275 - 0,825	RW	1	1
2874.04.40	1/2"	30 - 400	0,406 - 1,270	RG	1	1
2874.05.10	3/4"	17 - 210	0,100 - 0,412	B	1	1
2874.05.20	3/4"	17 - 210	0,157 - 0,609	G	1	1
2874.05.30	3/4"	17 - 200	0,275 - 0,825	RW	1	1
2874.05.40	3/4"	30 - 400	0,406 - 1,270	RG	1	1
2874.06.10	1"	17 - 210	0,100 - 0,412	B	1	1
2874.06.20	1"	17 - 210	0,157 - 0,609	G	1	1
2874.06.30	1"	17 - 200	0,275 - 0,825	RW	1	1
2874.06.40	1"	30 - 400	0,406 - 1,270	RG	1	1

B = Black
G = Green
RW = Red - b. white
RG = Red - b. grey

004

AUTOMATIC FLOW CONTROL VALVE



Automatic flow control valve allow maintaining a constant flow rate at the desired value, within a wide differential pressure range between upstream and downstream.

The flow rate value is set through a cartridge adjustable from outside using a special accessory spanner. During this operation, the valve does not need to be shut off. Inserted in hydraulic circuits, the automatic balancing valve **ensures maintaining the design flow rate.**

USE

They are particularly indicated in the following cases:

- Adjustment for pumping stations in central thermal fluid systems.
- Customer junctions balancing.
- Rising pillars balancing.
- Third way adjustment and balancing on thermoregulation units.

CHOICE

It is advisable to choose a automatic flow control valve whose adjustment degree corresponds to about half the cartridge flow rate range.
In this way, with the design nominal flow rate, a sufficient calibration margin is preserved so as to cope with any corrections due to inevitable route changes during work.

OPERATING PRINCIPLE

Pressure P2 is determined by the membrane reacting to pressure P1 acting on the membrane upper chamber.
Interacting with the spring, the difference (P1-P2) remains constant, while maintaining a steady ΔP through the orifice. As a result, a constant flow rate is obtained through the valve, regardless of the variations of the pressure difference between upstream and downstream.

Orifice bore

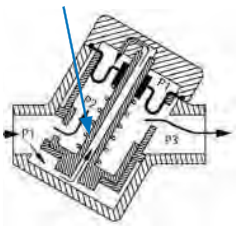



KEY:

P1 and **P3:** Circuit pressure values
P2: Pressure determined by membrane
ΔP = (P1-P3) = Total pressure difference between upstream/downstream

Indicates pressure variations
Indicates the flow direction

POSSIBLE APPLICATIONS

Automatic flow control valve are mainly used on the hydraulic circuit delivery pipe. Below are some typical application examples:

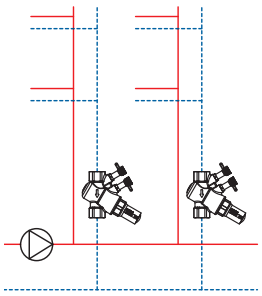

FIGURE 1

Automatic flow control valve with rising pillars balancing function.

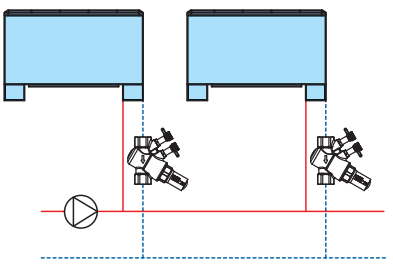

FIGURE 2

Automatic flow control valve with the function of serving in-line terminal elements (radiators, convectors, fan-coils, etc.).

2873



Pressure independent control valve.

It allows to keep the flow rate to the desired level even when pressure conditions change in the circuit where it is inserted.

Brass body.
Polymer cartridge with elastomer diaphragm.
Indicator with graduated scale.
Threaded connections FF UNI-EN-ISO 228.

- Max operating pressure 16 Bar
- Allowed temperatures -20 ÷ +120 °C
- Allowed fluid water and water+glycol 50%
- Pressure gauge plugs connection G1/8"

Replaceable cartridge. See spare parts pricelist.
Cartridges are available in different colours for both the pressure field and flow rate to be immediately identified.

For flow rate adjustment use accessory spanner code 2961.00.02 (see page 46).
Optional actuator series 2881 2882 to be ordered separately (see page 47).

Pressure independent control valve
Vanne d'equilibrage automatique motorisable
Клапан с независимой регулировкой давления
Supapă de reglare independentă a presiunii
Válvulas de regulación independiente de la presión
Unabhängiges Druckregelventil

Code	Size	DP (kPa)	Flow rate (m^3/h)	Cartridge	Pack	Carton
2873.04.50	1/2"	16 - 200	0,037 - 0,575	G	1	1
2873.04.60	1/2"	30 - 400	0,064 - 1,110	B	1	1
2873.05.50	3/4"	16 - 200	0,037 - 0,575	G	1	1
2873.05.60	3/4"	30 - 400	0,064 - 1,110	B	1	1
2873.06.50	1"	16 - 200	0,037 - 0,575	G	1	1
2873.06.60	1"	30 - 400	0,064 - 1,110	B	1	1

G = O.R. Grey
B = O.R. Black

004

2874



Pressure independent control valve, provided with pressure plugs.

It allows to keep the flow rate to the desired level even when pressure conditions change in the circuit where it is inserted.

Brass body.
Polymer cartridge with elastomer diaphragm.
Indicator with graduated scale.
Threaded connections FF UNI-EN-ISO 228.

- Max operating pressure 16 Bar
- Allowed temperatures -20 ÷ +120 °C
- Allowed fluid water and water+glycol 50%
- Pressure gauge plugs connection G1/8"

Replaceable cartridge. See spare parts pricelist.
Cartridges are available in different colours for both the pressure field and flow rate to be immediately identified.
Valve provided with two pressure plugs.

For flow rate adjustment use accessory spanner code 2961.00.02 (see page 46).
Optional actuator series 2881 2882 to be ordered separately (see page 47).

Pressure independent control valve provided with pressure outlets
Vanne d'equilibrage automatique motorisable dotée de prises de pression
Клапан для независимой регулировки давления с приёмниками давления
Supapă de reglare independentă a presiunii dotată cu prize de presiune
Válvula de regulación independiente de la presión dotada de tomas de presión
Unabhängiges Druckregelventil mit Druckanschlüssen

Code	Size	DP (kPa)	Flow rate (m^3/h)	Cartridge	Pack	Carton
2874.04.50	1/2"	16 - 200	0,037 - 0,575	G	1	1
2874.04.60	1/2"	30 - 400	0,064 - 1,110	B	1	1
2874.05.50	3/4"	16 - 200	0,037 - 0,575	G	1	1
2874.05.60	3/4"	30 - 400	0,064 - 1,110	B	1	1
2874.06.50	1"	16 - 200	0,037 - 0,575	G	1	1
2874.06.60	1"	30 - 400	0,064 - 1,110	B	1	1

G = O.R. Grey
B = O.R. Black

004

PRESSURE INDEPENDENT CONTROL VALVE



The pressure independent control valve allows adjusting and keeping the flow rate constant to the desired value, within a wide differential pressure range upstream and downstream. Therefore, it encloses the functions of a automatic flow control valve and a control valve in a single product.

The flow rate value is adjusted in the following ways:
- Through a cartridge adjustable from outside (manual operation to be carried out using a special accessory spanner) so as to limit the maximum set value.
- Through an electrothermal or electrical motor (automatic operation) according to the thermal loads required by the system.

During these operations/adjustments the valve does not need to be shut off.

USE

It is particularly indicated in the following cases:

- Adjustment for pumping stations in central thermal fluid systems.
- Terminal balancing and adjustment on customer junctions.
- Third way adjustment and balancing on thermoregulation units.

CHOICE

It is advisable to choose the pressure independent control valve, the pressure adjustment degree corresponding to about half the cartridge flow rate range.
In this way, with the design nominal flow rate, a sufficient calibration margin is preserved so as to cope with any corrections due to inevitable route changes during work.

OPERATING PRINCIPLE

Pressure P2 is determined by the membrane reacting to pressure P1 acting on the membrane upper chamber.
Interacting with the spring, the difference (P1-P2) remains constant, while maintaining a steady ΔP through the orifice. As a result, a **constant flow rate through the valve is obtained regardless of variations in the pressure difference between upstream and downstream, which can be adjusted by the motor depending on the system thermal requirements.**

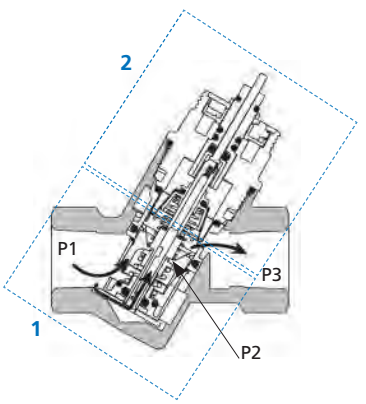

KEY:
1 Control device ΔP
2 Flow rate adjustment device
P1 and **P3**: Circuit pressure values
P2: Pressure determined by membrane
ΔP = (P1-P3) = Total pressure difference between upstream/downstream

POSSIBLE APPLICATIONS

Pressure independent control valves are mainly used on the hydraulic circuit return pipe. Below are some typical application examples:

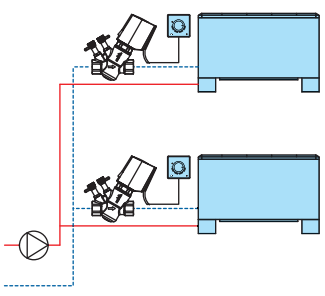

FIGURE 1

Pressure independent control valve with the function of serving in-line terminal elements (radiators, convectors, fan-coils, etc.). Each valve provided with an thermoelectric motor is controlled by a thermostat/chronothermostat.

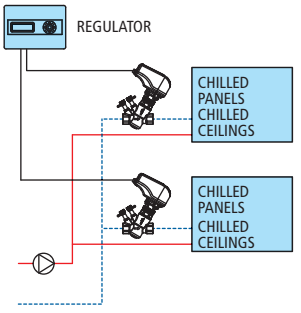

FIGURE 2

Pressure independent control valve with the function of serving terminal elements (chilled panels, chilled beams, etc.). Each valve provided with an electrical motor is managed by a controller (signal 0÷10V / 230V / 24V).

3535



Differential pressure control and balancing valves.

This keeps the pressure difference between two points of a hydraulic circuit constant at a preset value.

Brass body.
Polymer cartridge with elastomer diaphragm.
Copper capillary pipe.
Threaded connections FF UNI-EN-ISO 228.

- Max operating pressure 16 Bar
- Allowed temperatures -20 ÷ +120 °C
- Allowed fluid water and water+glycol 50%
- Pressure gauge plugs connection G1/8"
- Capillary pipe length 1 m

Replaceable cartridge. See spare parts pricelist.

To connect the capillary pipe to the control probe holder, set up the required series 3537 reducing coupling (see page 47).

Control and balancing valve for differential pressure
Vanne de contrôle et d'équilibrage de la pression différentielle
Клапан контроля и балансировки дифференциального давления
Supapă de control și echilibrare a presiunii diferențiale
Válvula de control y balance de la presión diferencial
Steuer- und Ausgleichsventil für Differentialdruck

Code	Size	DP (kPa)	Flow rate (m^3/h)	Pack	Carton
3535.04.20	1/2"	20	0,050 - 0,960	1	1
3535.04.30	1/2"	30	0,050 - 1,419	1	1
3535.05.20	3/4"	20	0,050 - 0,960	1	1
3535.05.30	3/4"	30	0,050 - 1,419	1	1
3535.06.20	1"	20	0,050 - 0,960	1	1
3535.06.30	1"	30	0,050 - 1,419	1	1

004

3536



Differential pressure control and balancing valves, fitted with pressure plugs.

This keeps the pressure difference between two points of a hydraulic circuit constant at a preset value.

Brass body.
Polymer cartridge with elastomer diaphragm.
Copper capillary pipe.
Threaded connections FF UNI-EN-ISO 228.

- Max operating pressure 16 Bar
- Allowed temperatures -20 ÷ +120 °C
- Allowed fluid water and water+glycol 50%
- Pressure gauge plugs connection G1/8"
- Capillary pipe length 1 m

Replaceable cartridge. See spare parts pricelist.
Valve provided with two pressure plugs.

To connect the capillary pipe to the control probe holder, set up the required series 3537 reducing coupling (see page 47).

Control and balancing valve for differential pressure equipped with pressure outlets
Vanne de contrôle et d'équilibrage de la pression différentielle dotée de prises de pression
Клапан контроля и балансировки дифференциального давления оснащен штуцерами замера давления
Supapă de control și echilibrare a presiunii diferențiale prevăzută cu prize de presiune
Válvula de control y balance de la presión diferencial equipada con tomas de presión
Steuer- und Ausgleichsventil für Differentialdruck mit Druckanschlüssen

Code	Size	DP (kPa)	Flow rate (m^3/h)	Pack	Carton
3536.04.20	1/2"	20	0,050 - 0,960	1	1
3536.04.30	1/2"	30	0,050 - 1,419	1	1
3536.05.20	3/4"	20	0,050 - 0,960	1	1
3536.05.30	3/4"	30	0,050 - 1,419	1	1
3536.06.20	1"	20	0,050 - 0,960	1	1
3536.06.30	1"	30	0,050 - 1,419	1	1

004

3566



Portable electronic differential pressure and flow rate measuring instrument. Suitable for detecting work parameters of balancing valves and of measuring stub pipes. Battery-operated.

Supplied complete with professional case and holes for connection to circuit.
Pair of adapters code 932.01.00 not included.

- Max allowable static pressure: 20 Bar
- Measurament range: 2 kPa ÷ 600 kPa
- Accuracy: +/-2% of reading or +/-0.2 kPa whichever is the greater

Instrument with the following accessories:
- Pair of pressure plugs code 621.01.50
- Adapter kit code 1422.02.00
- Cartridge adjustment spanner code 2961.00.02

Portable electronic measuring instrument
Mesureur électronique portatif
Электронный измеритель давления
Dispozitiv de măsurare electronic portabil
Medidor electrónico de diferencial para determinación del caudal
Tragbares elektronisches Messgerät

Code	Pack	Carton
3566.00.00	1	1

Option of using the instrumental rental service. Contact RBM's sales department for the terms, conditions and prices.

004

932



Pair of needle adapters to measure pressure.

Connection of the electronic differential pressure measuring instrument to the pressure plugs on the measuring stub pipes and RBM balancing valves.

Brass body.
Steel needle.
Threaded connections F UNI-EN-ISO 228.

- Max operating pressure 16 Bar
- Max operating temperature 120 °C

Needle adapters
Adaptateurs à aiguille
Игольчатый адаптер
Adaptoare cu ac
Par adaptadores de aguja para tomas de presión
Nadeladapter

Code	Size	Pack	Carton
932.01.00	1/8"	1	1

Used to connect pressure plugs code 621.01.50 to digital measuring instrument code 3566.00.00

004

621



Pair of pressure plugs.

Body and plugs in brass.
Elastomer pressure plugs internal seals.
Threaded connections M UNI-EN-ISO 228.

- Max operating pressure 16 Bar
- Max operating temperature 120 °C

Pressure plugs
Prises de pression
Штуцеры давления
Prize de presiune
Par tomas de presión para tronco medidor de caudal y válvula de equilibrado
Drückanschlüsse

Code	Size	Pack	Carton
621.01.50*	1/8"	1	10

**Pressure plugs for balancing valves and threaded stub pipes.*

Pressure plugs for needle adapters code 932.01.00
Accessory supplied with the digital meter code 3566.00.00

004

1422



1/4"M X 1/8"F reducing coupling pair. To adapt 1/8" gauge plugs, code 621.01.50, to stub pipes and RBM flanged balancing valves with 1/4" connection.

Brass body.
Elastomer seals.
Threaded connections MF UNI-EN-ISO 228.

- Max operating pressure 16 Bar
- Max operating temperature 120 °C

Reducing coupling kit 1/4"M x 1/8"F
Kit de réduction 1/4"M x 1/8"F
Комплект переходника 1/4"M x 1/8"F
Kit de reducţie 1/4"M x 1/8"F
Kit de reducción 1/4"M x 1/8"H
Bausatz Reduzierung 1/4"M x 1/8"F

Code	Size A	Size B	Pack	Carton
1422.02.00	1/4" M	1/8" F	1	10

For pressure gauge connections other than the G 1/4" F standard, contact RBM for more specifications about the accessory to be connected to the measuring instrument.
Accessory supplied with the digital meter code 3566.00.00

004

2961



Cap adjusting wrench.

It allows to adjust the flow rate to the desired value, by acting on the cartridge.
Such operation does not involve the valve.

Cap adjusting wrench
Clé pour réglage cartouche
Ключ для регулирования картриджа
Cheie de reglare a cartuşului
Llave de regulación cartucho
Schlüssel zur Einsatzregulierung

Code	Pack	Carton
2961.00.02	1	1

Specific accessory for automatic flow control valve and independent pressure control valve series 2873 and 2874.

Accessory supplied with the digital meter code 3566.00.00

004

2882



Electromechanical actuator. Complete with ring nut clamping to valve body and power supply cable.

Normally closed valve position when power missing.

- Power supply 24/230 V
- Consumption 5 W
- Frequency 50Hz
- Electric protection IP54
- Cable length 1 m

Electromechanical actuator
Servomoteur électromécanique
Электромеханический сервопривод
Servocomandă electromecanică
Servomando electromecánico
Elektrothermische Servosteuerung

Code	Power supply	Pack	Carton
2882.00.02	24V AC 0÷10V	1	1
2882.00.12	110-230V AC 3 POINTS	1	1
2882.00.22	24V AC 3 POINTS	1	1

Specific accessory for independent pressure control valve series 2873 and 2874.

004

2881



Thermo-electric actuator. Complete with ring nut clamping to valve body and power supply cable.

Normally closed valve position when power missing.

- Power supply 24/230 V
- Consumption 2,5 W
- Frequency 50Hz
- Electric protection IP54
- Cable length 1 m
- Nominal thrust 170N

Thermo-electric actuator
Servomoteur électrothermique
Электротермический сервопривод
Servocomandă electrotermică
Servomando electrotérmico
Elektrothermische Servosteuerung

Code	Power supply	Pack	Carton
2881.00.12	24V AC/DC	1	50
2881.00.22	230V AC	1	50

Version without auxiliary microswitch (2 wires)

Specific accessory for independent pressure control valve series 2873 and 2874.

004

3537



Adapter for the series 3535 and 3536 differential pressure control and balancing valve capillary pipe.

Brass body.
Threaded connection M UNI-EN-ISO 228.

- Max operating pressure 16 Bar
- Max operating temperature 120 °C

Adapter for the series 3535 and 3536 differential pressure control and balancing valve capillary pipe
Adaptateur pour tube capillaire des vannes de contrôle et d'équilibrage de la pression différentielle séries 3535 et 3536
Адаптер для капиллярной трубки клапанов контроля и балансировки дифференциального давления серии 3535 и 3536
Adaptor pentru tub capilar supape de control și echilibrare a presiunii diferențiale seria 3535 și 3536
Adaptador para tubo capilar de válvulas de control y balance de la presión diferencial serie 3535 y 3536
Adapter für Kapillarschlauch Steuer- und Ausgleichsventile für Differentialdruck, Serie 3535 und 3536

Code	Size	Pack	Carton
3537.01.00*	1/8"	1	1
3537.02.00**	1/4"	1	1

**Suitable for connection with series 619 Balanflow balancing valves*
***Suitable for connection to ball valves with series 3465 water drain (refer to Sferika catalogue).*

To be used to connect the capillary pipe of the series 3535 and 3536 differential pressure control and balancing valves to control wells with 1/8" or 1/4" connection.

004


RBM
Brass

AIR VENTING VALVES, DEAERATORS AND DIRT SEPARATORS

VANNES DE PURGE D'AIR, DÉSAÉRATEURS ET DÉBOUEURS
ВОЗДУХООТВОДЧИКИ, ДЕАЭРАТОРЫ, ГРЯЗЕСБОРНИКИ
SUPAPE DE EVACUARE A AERULUI, DEGAZOARE, DENISIPATOARE
VÁLVULAS DE PURGA DE AIRE, DESAIREADORES Y DESFANGADORES
ENTLÜFTUNGSVENTILE, ENTLÜFTER UND SCHLAMMABSCHEIDER

Automatic air venting valves	pag. 53	
Deaerators	pag. 56	
Dirt separators	pag. 60	
Magnetic dirt separators	pag. 64	
Acid condensation neutralising filter	pag. 83	
Manual air purge and venting valve	pag. 84	
Plant treatment additives and accessories	pag. 84	

MINILUFT COMPACT & MINILUFT

AUTOMATIC COMPACT AIR VENT VALVES

MAXIMUM DISCHARGE PRESSURE 4 bar

RBM Brass

MAXIMUM DISCHARGE PRESSURE 6 bar

IDEAL FOR INSTALLATION ON MANIFOLDS



MINILUFT COMPACT
Lateral discharge



MINILUFT
Vertical discharge

Miniluft valves are automatic, float-operated air vent valves designed to remove air and gases from heating or cooling systems.
Their small size makes them ideal for applications on manifolds or distribution kits housed in containment boxes.
Despite their small size, they are very effective in removing air during both loading and emptying, helping keep the various areas of the system where they are installed free of air.
With their high functional guarantee, these automatic air vent valves must be considered a system safety device.

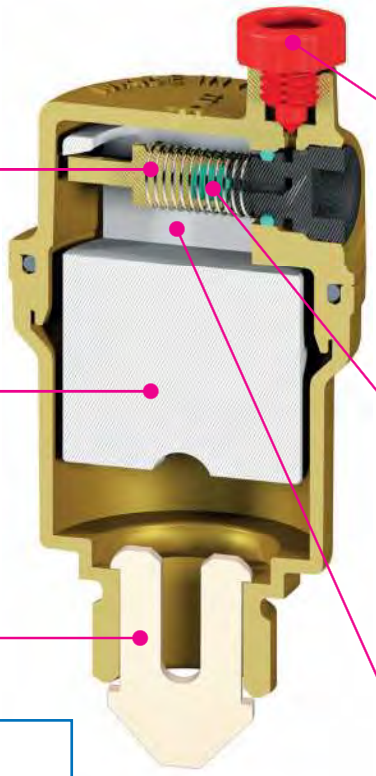

Spring

Float

Technopolymer float, fitted inside the body in such a way that its functionality cannot be influenced by external movements, including rotation and vibration.

Air pocket breaker

(only available in size 3/8")
Prevents the formation of air pockets in the system that could block the drain flow.
If combined with Series 38 check valve, remove the air pocket breaker from the valve.

Closure cap

Gas ejection device

The ejection of gases (such as oxygen, hydrogen, carbon dioxide) prevents the latter, if retained, from forming corrosive acid solutions or activating galvanic drilling processes in the presence of stray currents.
The gas ejection device can be closed by completely screwing the cap.

Air accumulation pressostatic chamber

The pressostatic chamber is designed to prevent contact between the impurities present on the fluid free surface and the sealing device, especially when the circulation pump is started.

Structure completely made of brass

- Ensures system efficiency
- Limited overall dimensions
- Automatic air venting

OPERATING PRINCIPLE

The accumulation of air bubbles in the upper part of the valve body (air accumulation pressostatic chamber) causes the float descent and, consequently, the gas ejection device opening.

For the valve to properly operate, make sure that the water pressure remains lower than the maximum discharge pressure value **(4 bar for the model Miniluft Compact - 6 bar for the model Miniluft).**



Valve position **CLOSED**



Valve position **OPEN**

MINILUFT HP

HIGH PERFORMANCE COMPACT AUTOMATIC AIR VENTING VALVE



Miniluft HP valves are automatic, float-operated air vent valves designed to remove air and gases from heating or cooling systems. They are ideal for application on vertical or horizontal columns, on manifolds or boilers, and can be installed in every zone of the system where bubbles may develop. Featuring a small size and high performance (they have a wider pressostatic chamber compared to Miniluft valves), they are very effective in removing air both during filling and emptying, helping you keep the areas on the system where they are installed free from air. With their high functional guarantee, these automatic air vent valves must be considered a system safety device.

MAXIMUM DISCHARGE PRESSURE 8 bar

IDEAL FOR INSTALLATION ON DELIVERY COLUMNS

Closure cap

Spring

Float

Technopolymer float, fitted inside the body in such a way that its functionality cannot be influenced by external movements, including rotation and vibration.

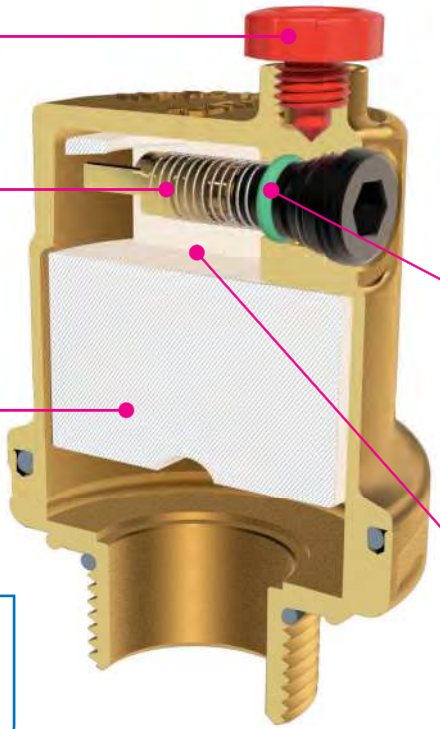

Gas ejection device

The ejection of gases (such as oxygen, hydrogen, carbon dioxide) prevents the latter, if retained, from forming corrosive acid solutions or activating galvanic drilling processes in the presence of stray currents. The gas ejection device can be closed by completely screwing the cap.

Air accumulation pressostatic chamber

The pressostatic chamber is designed to prevent contact between the impurities present on the fluid free surface and the sealing device, especially when the circulation pump is started.

Structure completely made of brass

- Ensures system efficiency
- Limited overall dimensions
- High performance
- Automatic air venting

OPERATING PRINCIPLE

The accumulation of air bubbles in the upper part of the valve body (air accumulation pressostatic chamber) causes the float descent and, consequently, the gas ejection device opening.
For the valve to properly operate, make sure that the water pressure remains lower than the maximum discharge pressure value.



Valve position **CLOSED**



Valve position **OPEN**

MEGALUFT & MEGALUFT HP

AUTOMATIC HIGH CAPACITY AIR VENT VALVES

Megaluft are high performance, float-operated automatic air vent valves with high discharge capacity.
They are designed to remove any air and gas contained in the heating or cooling system.
They are ideal for application on vertical or horizontal columns, on manifolds or boilers, and can be installed in every zone of the system where bubbles may develop.

Megaluft and Megaluft HP are intended to remove air both during loading and emptying, without the need for manual intervention. Thanks to their high discharge capacity, they help keep all points of the system where they are installed air-free. With their high functional guarantee, these automatic air vent valves must be considered a system safety device.



Megaluft

MAXIMUM DISCHARGE PRESSURE 5 bar



Megaluft HP

IDEAL FOR INSTALLATION ON DELIVERY COLUMNS

MAXIMUM DISCHARGE PRESSURE 10 bar



Closure cap

Spring

Air accumulation pressostatic chamber

The pressostatic chamber is wide and it is designed to prevent contact between the impurities present on the fluid free surface and the sealing device, especially when the circulation pump is started.

Gas ejection device

Located far away from the water free surface, outside of the valve, it prevents residual impurities present in the system liquid from impairing the ejection device tightness. The ejection of gases (such as oxygen, hydrogen, carbon dioxide) prevents the latter, if retained, from forming corrosive acid solutions or activating galvanic drilling processes in the presence of stray currents. The gas ejection device can be closed by completely screwing the cap.

Float

Technopolymer float, fitted inside the body in such a way that its functionality cannot be influenced by external movements, including rotation and vibration.

Structure completely made of brass

- Ensures system efficiency
- High discharge capacity
- High performance
- Automatic air venting

OPERATING PRINCIPLE

The accumulation of air bubbles in the upper part of the valve body (air accumulation pressostatic chamber) causes the float descent and, consequently, the gas ejection device opening.
For the valve to properly operate, make sure that the water pressure remains lower than the maximum discharge pressure value.
(5 bar for the model Megaluft - 10 bar for the model Megaluft HP).



Valve position **CLOSED**



Valve position **OPEN**

38



Check valve for the automatic shut-off of air vent valves, models Vasa, Miniluft and Megaluft.

Brass body.
Elastomer seals.
Threaded connections MF UNI-EN-ISO 228.

- Max operating pressure 6 Bar (without air venting valve)
- Max operating temperature 100 °C

Check valve
Petit clapet anti-retour
Омсекающий клапан
Supapă de reținere
Válvula de interceptación (retención) para purgador automático de aire
Rückschlagventil

Code	Size A	Size B	Pack	Carton
38.04.10	G 1/2" F	G 1/2" M	10	500

Check valve with pre-treated threading
Petit clapet anti-retour avec filetage avec pré-joint
Омсекающий клапан с предварительно уплотнённой резьбой
Supapă de reținere cu filet cu garnitură
Válvula de retención con rosca precubierta
Rückschlagventil mit vor-gedichtetem Gewinde

Code	Size A	Size B	Pack	Carton
38.03.70	G 3/8" F	G 3/8" M	10	800
38.04.70	G 3/8" F	G 1/2" M	10	600
38.04.50	G 1/2" F	G 1/2" M	10	500

Technical drawing on page 200

019

791



Miniluft CP
Compact automatic air vent valve for small and medium circuits, complete with manual locking pawl and check valve for automatic shut-off. Float operation.

Polymer body. Polymer cap unit.
Float in PP.
Stainless steel AISI 302 spring.
Elastomer seals.
Threaded connection M UNI-EN-ISO 228.

- Max operating pressure 6 Bar
- Max nominal pressure allowable 10 Bar
- Max operating discharge pressure 4 Bar
- Max operating temperature 100 °C
- Allowed fluid water and water+glycol 30 %

MAXIMUM DISCHARGE PRESSURE 4 bar
IDEAL FOR INSTALLATION ON MANIFOLDS

Polymer compact automatic air vent valve
Purgeur d'air automatique compact en polymère
Компактный автоматический воздуоотводчик из полимера
Supapă automată de evacuare a aerului compactă din polimer
Válvula automática de purga de aire compacta de polímero
Kompaktes, automatisches Entlüftungsventil aus Polymer

Code	Size	Model	Pack	Carton
791.03.40	G 3/8"	Miniluft CP	1	50
791.04.40	G 1/2"	Miniluft CP	1	50

Technical drawing on page 200

019

2827



Miniluft Compact
Compact automatic air vent valve for smaller systems, complete with manual locking pawl. Lateral discharge. Float operation.

Brass body. Polymer cap unit.
Float in PP.
Stainless steel AISI 302 spring.
Elastomer seals.
Polymer air pocket breaker
Threaded connection M UNI-EN-ISO 228.

- Max operating pressure 10 Bar
- Max operating discharge pressure 4 Bar
- Max operating temperature 115 °C
- Allowed fluid water and water+glycol 30 %

MAXIMUM DISCHARGE PRESSURE 4 bar
IDEAL FOR INSTALLATION ON MANIFOLDS

Compact automatic air vent valve with side drain
Purgeur d'air automatique compact décharge latérale
Компактный автоматический воздуоотводчик с боковым сбросом
Supapă automată de evacuare a aerului compactă cu evacuare laterală
Válvula automática de purga de aire compacta de descarga lateral
Kompaktes, automatisches Entlüftungsventil mit seitlichem Auslass

Code	Size	Model	Pack	Carton
2827.03.10*	G 3/8"	Miniluft Compact	1	10
2827.04.00	G 1/2"	Miniluft Compact	1	50

**Valve fitted with air pocket breaker*

Technical drawing on page 200

Compact!

019

2827



Miniluft Compact

Compact automatic air vent valve for smaller systems, complete with manual locking pawl. Lateral discharge. Float operation.

Chrome brass body and cap.
Float in PP.
Stainless steel AISI 302 spring.
Elastomer seals.
Threaded connection M UNI-EN-ISO 228.

- Max operating pressure 10 Bar
- Max operating discharge pressure 4 Bar
- Max operating temperature 115 °C
- Allowed fluid water and water+glycol 30 %

MAXIMUM DISCHARGE PRESSURE 4 bar

Chrome-plated automatic compact air vent valve - side drain
Purgeur d'air automatique compact chromé - décharge latérale
Компактный хромированный автоматический воздуоотводчик с боковым сбросом
Supapă automată de evacuare a aerului compactă cromată - evacuare laterală
Válvula automática de purga de aire compacta cromada - de descarga lateral
Kompaktes, automatisches Entlüftungsventil, verchromt - mit seitlichem Auslass

Code	Size	Model	Pack	Carton
2827.03.90	G 3/8"	Miniluft Compact	1	50
2827.04.90	G 1/2"	Miniluft Compact	1	50

Technical drawing on page 200

Compact!

019

2828



Miniluft

Compact automatic air vent valve for smaller systems, complete with manual locking pawl. Vertical discharge. Float operation.

Brass body. Polymer cap unit.
Float in PP.
Stainless steel AISI 302 spring.
Elastomer seals.
Polymer air pocket breaker
Threaded connection M UNI-EN-ISO 228.

- Max operating pressure 10 Bar
- Max operating discharge pressure 6 Bar
- Max operating temperature 115 °C
- Allowed fluid water and water+glycol 30 %

MAXIMUM DISCHARGE PRESSURE 6 bar
IDEAL FOR INSTALLATION ON MANIFOLDS

Compact automatic air vent valve with vertical drain
Purgeur d'air automatique compact en polymère décharge verticale
Компактный автоматический воздуоотводчик с вертикальным сбросом
Supapă automată de evacuare a aerului compactă cu evacuare verticală
Válvula automática de purga de aire compacta de descarga vertical
Kompaktes automatisches Entlüftungsventil mit vertikalem Auslass

Code	Size	Model	Pack	Carton
2828.03.10*	G 3/8"	Miniluft	1	50
2828.04.00	G 1/2"	Miniluft	1	50

**Valve fitted with air pocket breaker*

Technical drawing on page 200

Vertical discharge.

019

3574



Miniluft HP

Automatic high-performance air vent valve with manual locking pawl. Vertical discharge. Float operation.

Brass bottom and cap.
Float in PP.
Stainless steel AISI 302 spring.
Elastomer seals.
Threaded connection M UNI-EN-ISO 228.

- Max operating pressure 10 Bar
- Max operating discharge pressure 8 Bar
- Max operating temperature 115 °C
- Allowed fluid water and water+glycol 30 %

MAXIMUM DISCHARGE PRESSURE 8 bar
IDEAL FOR INSTALLATION ON DELIVERY COLUMNS

High-performance, compact automatic air vent valve
Purgeur d'air automatique compact à hautes performances
Компактный автоматический воздуоотводчик высокой производительности
Supapă automată de evacuare a aerului compactă, cu înalte performanțe
Válvula automática de purga de aire compacta de altas prestaciones
Kompaktes, leistungsstarkes, automatisches Entlüftungsventil

Code	Size	Model	Pack	Carton
3574.03.00	G 3/8"	Miniluft HP	1	50
3574.04.00	G 1/2"	Miniluft HP	1	50
3574.05.00	G 3/4"	Miniluft HP	1	50

Technical drawing on page 200

Compact! – high performance

019

37



Vasa

Automatic air vent valve, degasser. Float operation.

Nickel brass body.
Float and lever in PP.
Stainless steel AISI 302 spring.
Elastomer seals.
Threaded connection M UNI-EN-ISO 228.

- Max operating pressure 6 Bar
- Max operating discharge pressure 2.5 Bar
- Max operating temperature 100 °C
- Allowed fluid water and water+glycol 30 %





Technical drawing on page 201

Degasser automatic air vent valve with protective cap
Purgeur d'air automatique dégazeur avec capuchon de protection
Автоматический воздуоотводчик, дегазатор с защитным колпачком
Supapă automată de evacuare a aerului și degazare cu capac de protecție
Válvula automática de purga de aire del desgasificador con capuchón de protección
Automatisches Ventil zum Luftabzug Entgaser mit Schutzkappe

Code	Size	Model	Pack	Carton
37.03.60	G 3/8"	Vasa	10	40
37.04.60	G 1/2"	Vasa	10	40
37.05.60	G 3/4"	Vasa	10	40
37.06.60	G 1"	Vasa	10	40

Notes: To be installed on circuits with positive pumping pressures.
For circuits with negative pumping pressures, always provide for component manual shut-off by interposing a suitable ball valve.

Replaceable float unit.
Cod. 891.00.00 See spare parts pricelist.

019

216



VasaTre

Automatic air vent valve, degasser, complete with built-in drain valve and Gardena quick connector, pressure gauge connection. Float operation.

Nickel brass body.
Float and lever in PP.
Elastomer seals.
Threaded angle connection M UNI-EN-ISO 228.
Pressure gauge connection F G1/4.

- Max operating pressure 6 Bar
- Max operating temperature 100 °C
- Allowed fluid water and water+glycol 30 %





Technical drawing on page 201

Automatic air vent valve for corner connection with protective cap
Purgeur d'air automatique raccord coudé avec capuchon de protection
Автоматический воздуоотводчик, угловой фитинг с защитным колпачком
Supapă automată de evacuare a aerului cu prindere unghiulară și capac de protecție
Válvula automática de purga de aire de la conexión de ángulo con capuchón de protección
Automatisches Ventil zum Luftabzug Winkelanschluss mit Schutzkappe

Code	Size	Model	Pack	Carton
216.05.60	G 3/4"	VasaTre	3	12
216.06.60	G 1"	VasaTre	3	12
216.07.60	G 1"1/4	VasaTre	3	3

Notes: To be installed on circuits with positive pumping pressures.
Assembly on horizontally developed manifolds and pipes.

Replaceable float unit.
Cod. 891.00.00 See spare parts pricelist.

019

2840



Megaluft

High-capacity automatic air vent valve, degasser. Float operation.

Brass body.
Float and lever in PP.
Stainless steel AISI 302 spring.
Elastomer seals.
Threaded connection M UNI-EN-ISO 228.

- Max operating pressure 10 Bar
- Max operating discharge pressure 5 Bar
- Max operating temperature 115 °C
- Allowed fluid water and water+glycol 30 %





Technical drawing on page 201

High-capacity, automatic air vent valve
Purgeur d'air automatique à grande capacité
Автоматический воздуоотводчик большой производительности
Supapă automată de evacuare a aerului de mare capacitate
Válvula automática de purga de aire de gran capacidad
Hocheffizientes, automatisches Entlüftungsventil

Code	Size	Model	Pack	Carton
2840.03.00	G 3/8"	Megaluft	1	50
2840.04.00	G 1/2"	Megaluft	1	50

019

2836



Megaluft HP
Deaerator with high discharge capacity. Float operation.

Brass body.
Float and lever in PP.
Stainless steel AISI 302 spring.
Elastomer seals.
Threaded connection M UNI-EN-ISO 228.

- Max operating pressure 10 Bar
- Max operating discharge pressure 10 Bar
- Max operating temperature 115 °C
- Allowed fluid water and water+glycol 30 %

MAXIMUM DISCHARGE PRESSURE 10 bar

IDEAL FOR INSTALLATION ON DELIVERY COLUMNS

Deaerator with high discharge capacity
Séparateur d'air avec une grande capacité de décharge
Деаэратор с большим объёмом выпуска
Degazor cu mare capacitate de sarcină
Desaireador con gran capacidad de descarga
Entlüfter mit hoher Entlüftungskapazität

Code	Size	Model	Pack	Carton
2836.04.00	G 1/2"	Megaluft HP	1	10

Technical drawing on page 201

019

2830



Airterm
Line deaerator. Float operated.

Brass body.
Float and lever in PP.
Stainless steel AISI 302 spring.
Stainless steel 304 3Layers cartridge.
Elastomer seals.
Threaded connections F UNI-EN-ISO 228.

- Max operating pressure 10 Bar
- Max operating discharge pressure 10 Bar
- Max operating temperature 110 °C
- Allowed fluid water and water+glycol 30 %

MAXIMUM DISCHARGE PRESSURE 10 bar

IDEAL FOR INSTALLATION ON DELIVERY COLUMNS

In-line deaerator
Séparateur d'air en ligne
Поточный деаэратор
Degazor de linie
Desaireador en línea
Entlüfter für Leitungen

Code	Size	Model	Pack	Carton
2830.04.00	G 1/2"	Airterm	1	6
2830.05.00	G 3/4"	Airterm	1	6
2830.06.00	G 1"	Airterm	1	6
2830.07.00	G 1"1/4	Airterm	1	6
2830.08.00	G 1"1/2	Airterm	1	6
2830.09.00	G 2"	Airterm	1	1

Technical drawing on page 202

019

3740



Thermal insulation for Airterm in-line deaerator (threaded) consisting of half-casings made of expanded polyethylene with external antiscratch coating.

Fire behaviour class I
Density 33 kg/m^3
Max operating temperature -40 ÷ +90 °C

NEW

Thermal shell for Airterm (threaded)
Coque thermique pour Airterm (filetée)
Теплоизоляционный кожух для Airterm (резьбовой)
Carcasă termică pentru Airterm (cu filet)
Protección térmica para Airterm (roscada)
Wärmeschale für Airterm (mit Gewinde)

Code	Size	Pack	Carton
3740.04.12	1/2" F	1	1
3740.05.12	3/4" F	1	1
3740.06.12	1" F	1	1
3740.07.12	1"1/4 F	1	1
3740.08.12	1"1/2 F	1	1
3740.09.12	2" F	1	1

041

2830



Airterm
Flanged in-line deaerator. Float operation.

Painted steel body.
Valve body and brass degasser.
Elastomer degasser seals.
PN16 flanged connections.

- Max operating pressure 10 Bar
- Max operating discharge pressure 10 Bar
- Max operating temperature 110 °C
- Allowed fluid water and water+glycol 30 %

MAXIMUM DISCHARGE PRESSURE 10 bar

IDEAL FOR INSTALLATION ON DELIVERY COLUMNS

Flanged in-line deaerator
Séparateur d'air en ligne à brides
Фланцевый поточный деаэратор
Degazor de linie cu flanșă
Desaireador en línea embridado
Geflanschter Entlüfter für Leitungen

Code	Size	Model	Pack	Carton
2830.09.72	DN 50	Airterm	1	1
2830.10.72	DN 65	Airterm	1	1
2830.11.72	DN 80	Airterm	1	1
2830.13.72	DN 100	Airterm	1	1
2830.14.72	DN 125	Airterm	1	1
2830.15.72	DN 150	Airterm	1	1

Technical drawing on page 202

Flange suitable for coupling with counter-flange UNI EN 1092-1.

019

3740



Thermal insulation for Airterm in-line deaerator (flanged) consisting of half-casings made of expanded polyethylene with external antiscratch coating.

Fire behaviour class I
Density 33 kg/m³
Max operating temperature -40 ÷ +90 °C

NEW

Thermal shell for Airterm (flanged)
Coque thermique pour Airterm (à bride)
Теплоизоляционный кожух для Airterm (фланцевый)
Carcasă termică pentru Airterm (cu flanșă)
Protección térmica para Airterm (embridada)
Wärmeschale für Airterm (mit Flansch)

Code	Size	Pack	Carton
3740.09.02	DN50	1	1
3740.10.02	DN65	1	1
3740.11.02	DN80	1	1
3740.13.02	DN100	1	1
3740.14.02	DN125	1	1
3740.15.02	DN150	1	1

041

2649



Airterm UP
Adjustable deaerator. Float operation.

Brass body.
Float and lever in PP.
Stainless steel AISI 302 spring.
Stainless steel AISI 304 cartridge.
Elastomer seals.
Threaded connections F UNI-EN-ISO 228.

- Max operating pressure 10 Bar
- Max operating discharge pressure 10 Bar
- Max operating temperature 115 °C
- Allowed fluid water and water+glycol 30 %

MAXIMUM DISCHARGE PRESSURE 10 bar

IDEAL FOR INSTALLATION ON DELIVERY COLUMNS

Adjustable deaerator
Séparateur d'air orientable
Поворотный деаэратор
Degazor orientabil
Desaireador orientable
Schwenkbarer Entlüfter

Code	Size	Model	Pack	Carton
2649.05.00	G 3/4"	Airterm UP	1	6
2649.06.00	G 1"	Airterm UP	1	6

Technical drawing on page 202

Can be mounted on vertical, horizontal and diagonal piping. Possibility of mounting series 2343 accessory connector (see page 84) for system washing.

019

37



VasaSette

High-capacity automatic air vent valve, degasser, with conveyable drain. Float operation.

Nickel brass body.
Float in PP.
Elastomer seals.
Threaded connections FF UNI-EN-ISO 228.
Channelled air discharge F G 1/2"."

- Max operating pressure 6 Bar
- Max operating discharge pressure 3 Bar
- Max operating temperature 100 °C
- Allowed fluid water and water+glycol 30 %





Degasser automatic air vent valve with protective cap
Purgeur d'air automatique dégazeur avec capuchon de protection
Автоматический воздуоотводчик, дегазатор с защитным колпачком
Supapă automată de evacuare a aerului și degazare cu capac de protecție
Válvula automática de purga de aire del desgasificador con capuchón de protección
Automatisches Ventil zum Luftabzug Entgaser mit Schutzkappe

Code	Size A	Size B	Model	Pack	Carton
37.05.70	G 3/4"	1/2"	VasaSette	1	4

Technical drawing on page 202

Large capacity discharge.
Channelled venting valve.

019

AIRTERM & AIRTERM UP

FLOAT OPERATED DEAERATORS

MAXIMUM DISCHARGE PRESSURE 10 bar



AIRTERM
In-line deaerator



AIRTERM UP
Adjustable deaerator

In-line **RBM Airterm** and adjustable **RBM Airterm UP** deaerators are devices designed to eliminate any micro air bubbles contained in the systems.

They are essentially made up of two parts:

- **ACTIVE**: The area where microbubbles are formed as a result of strong turbulence and swirling motion. Microbubbles blend together becoming bubbles.

- **PASSIVE**: Float-operated air vent valve to eliminate air bubbles.

With their capacity to absorb air bubbles nestled in the system's critical areas, deaerators help guarantee system efficiency and are therefore considered safety devices.

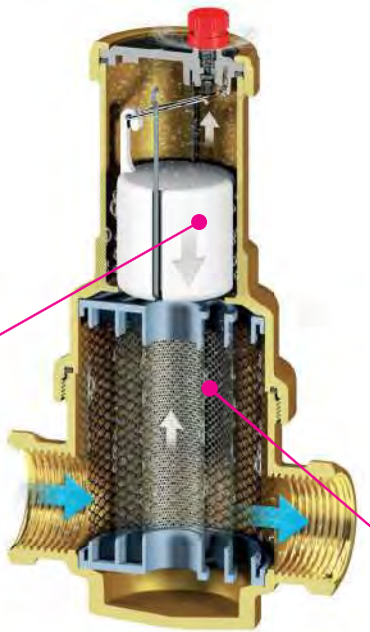

Passive part
High-performance air vent valve (discharge guaranteed up to 10 bar).



Innovative cartridge
made up of stainless steel sheets with different filtering grades. Stainless steel is an exceptional guarantee of long service life, maximum reliability in variable pressure, temperature, resistance to corrosion and wear conditions, generated by impurities (as it is increasingly less possible to predict what they are comprised of). The flow goes directly through the cartridge, and the continuous changes in sections lead to the creation of swirling movements which promote the release of micro bubbles. Nonetheless, the cartridge offers little resistance to flow passage and is characterised by very low head losses. The micro bubbles settle on the internal metal cage and, after reaching an adequate size, they move upwards and are ejected by the passive part of the device.

IDEAL FOR INSTALLATION ON DELIVERY COLUMNS

Passive part
High-performance air vent valve (discharge guaranteed up to 10 bar).

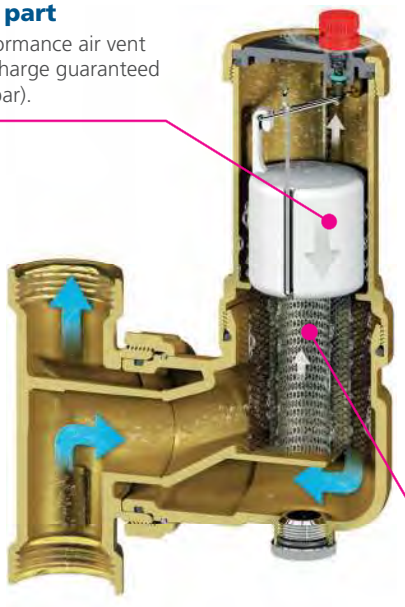

Innovative spiral cartridge
made of stainless steel. Stainless steel is an exceptional guarantee of long service life, maximum reliability in variable pressure, temperature, resistance to corrosion and wear conditions, generated by impurities (as it is increasingly less possible to predict what they are comprised of). The flow goes directly through the cartridge, and the continuous changes in sections lead to the creation of swirling movements which promote the release of micro bubbles. Nonetheless, the cartridge offers little resistance to flow passage and is characterised by very low head losses. The micro bubbles settle on the internal metal cage and, after reaching an adequate size, they move upwards and are ejected by the passive part of the device.



- Ensures system efficiency
- High discharge capacity
- High performance (max. discharge pressure 10 bar)
- Bi-directional (model Airterm)
- Can be mounted on vertical, horizontal and diagonal piping (model Airterm UP)

2829



Dirterm
Self-cleaning dirt separator. Complete with drain ball cock with hose connection.

Brass body.
Stainless steel AISI 304 3 Layers filtering cartridge.
Elastomer hydraulic seals.
Threaded connections FF UNI-EN-ISO 228.

- Max operating pressure 10 Bar
- Operating temperature 0 ÷ +110 °C

Technical drawing on page 202

Self-cleaning dirt separator
Filtre séparateur de boues autonettoyant
Самоочищающийся грязесборник
Denisipator cu autocurățare
Desfangador autolimpiante
Selbstreinigender Schlammabscheider

Code	Size	Kv (m³/h)	Pack	Carton
2829.04.00	G 1/2"	7,40	1	6
2829.05.00	G 3/4"	12,66	1	6
2829.06.00	G 1"	20,44	1	6
2829.07.00	G 1"1/4	28,14	1	6
2829.08.00	G 1"1/2	44,45	1	6
2829.09.00	G 2"	65,58	1	1

026

3739



Thermal insulation for Dirterm self-cleaning dirt separator (threaded) consisting of half-casings made of expanded polyethylene with external antiscratch coating.

Fire behaviour class I
Density 33 kg/m³
Max operating temperature -40 ÷ +90 °C

Thermal shell for Dirterm (threaded)
Coque thermique pour Dirtem (filetée)
Теплоизоляционный кожух для Dirtem (резьбовой)
Carcasă termică pentru Dirtem (cu filet)
Protección térmica para Dirtem (roscada)
Wärmeschale für Dirtem (mit Gewinde)

Code	Size	Pack	Carton
3739.04.12	1/2" F	1	1
3739.05.12	3/4" F	1	1
3739.06.12	1" F	1	1
3739.07.12	1"1/4 F	1	1
3739.08.12	1"1/2 F	1	1
3739.09.12	2" F	1	1

041

2829



Dirterm
Flanged self-cleaning dirt separator. Complete with drain ball cock with hose connection.

Painted steel body.
Brass valve body.
PN16 flanged connections.

- Max operating pressure 10 Bar
- Max operating temperature 110 °C
- Allowed fluid water and water+glycol 30 %

Technical drawing on page 202

Flange suitable for coupling with counter-flange UNI EN 1092-1.
Magnetic version underway.
Availability during 2019.
Contact the RBM technical office for information regarding product availability.

Flanged self-cleaning dirt separator
Filtre séparateur de boues autonettoyant à brides
Самоочищающийся фланцевый грязеотделитель
Denisipator cu autocurățare cu flanșă
Desfangador autolimpiante embridado
Geflanschter selbstreinigender Schlammabscheider

Code	Size	Pack	Carton
2829.09.72	DN 50	1	1
2829.10.72	DN 65	1	1
2829.11.72	DN 80	1	1
2829.13.72	DN 100	1	1
2829.14.72	DN 125	1	1
2829.15.72	DN 150	1	1

026

3739



Thermal insulation for Dirterm self-cleaning dirt separator (flanged) consisting of half-casings made of expanded polyethylene with external antiscratch coating.

Fire behaviour class I
Density 33 kg/m³
Max operating temperature -40 ÷ +90 °C

NEW

Thermal shell for Dirterm (flanged)
Coque thermique pour Dirtem (à bride)
Теплоизоляционный кожух для Dirtem (фланцевый)
Carcasă termică pentru Dirtem (cu flanșă)
Protección térmica para Dirtem (embridada)
Wärmeschale für Dirtem (mit Flansch)

Code	Size	Pack	Carton
3739.09.02	DN50	1	1
3739.10.02	DN65	1	1
3739.11.02	DN80	1	1
3739.13.02	DN100	1	1
3739.14.02	DN125	1	1
3739.15.02	DN150	1	1

041

3491



Dirterm UP
Adjustable self-cleaning dirt separator. Complete with drain ball cock with hose connection.

Brass body.
Stainless steel AISI 304 3 Layers filtering cartridge.
Elastomer hydraulic seals.
Threaded connections FF UNI-EN-ISO 228.

- Max operating pressure 10 Bar
- Operating temperature 0 ÷ +110 °C

IDEAL FOR INSTALLATION ON RETURN PIPING

Technical drawing on page 203

Can be mounted on vertical, horizontal and diagonal piping. Possibility of mounting series 2343 accessory connector (see page 84) for system washing.

Adjustable self-cleaning dirt separator
Filtre séparateur de boues orientable autonettoyant
Поворотный самоочищающийся грязеотделитель
Denisipator orientabil cu autocurățare
Desfangador orientable autolimpiante
Selbstreinigender ausrichtbarer Schlammabscheider

Code	Size	Pack	Carton
3491.05.00	G 3/4"	1	1
3491.06.00	G 1"	1	1

026

2831



Airterm Dirt
Self-cleaning dirt separator / deaerator. Float operated deaerator. Complete with drain ball cock with hose connection.

Brass body.
Lever floating device in PP.
Stainless steel AISI 304 3 Layers filtering cartridge.
Elastomer hydraulic seals.
Threaded connections FF UNI-EN-ISO 228.

- Max operating pressure 10 Bar
- Max operating discharge pressure 10 Bar
- Operating temperature 0 ÷ +110 °C

MAXIMUM DISCHARGE PRESSURE 10 bar

IDEAL FOR INSTALLATION ON RETURN PIPING

Technical drawing on page 203

Dirt separator + embedded deaerator.

Self-cleaning dirt separator / deaerator
Filtre séparateur de boues autonettoyant / séparateur d'air
Самоочищающийся грязеотделитель / деаэратор
Denisipator cu autocurățare/degazor
Desfangador autolimpiante / desaireador
Selbstreinigender Schlammabscheider / Entlüfter

Code	Size	Kv (m³/h)	Pack	Carton
2831.04.00	G 1/2"	7,40	1	1
2831.05.00	G 3/4"	12,66	1	1
2831.06.00	G 1"	20,44	1	1
2831.07.00	G 1"1/4	28,14	1	1

026

3741



Thermal insulation for Airterm Dirt Self-cleaning dirt separator/deaerator (threaded) consisting of half-casings made of expanded polyethylene with external antiscratch coating.

Fire behaviour class I
Density 33 kg/m³
Max operating temperature -40 ÷ +90 °C

NEW

Thermal shell for Airterm Dirt (threaded)
Coque thermique pour Airtem Dirt (filetée)
Теплоизоляционный кожух для Airtem Dirt (резьбовой)
Carcasă termică pentru Airtem Dirt (cu filet)
Protección térmica para Airterm Dirt (roscada)
Wärmeschale für Airtem Dirt (mit Gewinde)

Code	Size	Pack	Carton
3741.04.12	1/2" F	1	1
3741.05.12	3/4" F	1	1
3741.06.12	1" F	1	1
3741.07.12	1"1/4 F	1	1

041

2831



Airterm Dirt
Self-cleaning dirt separator/ flanged deaerator. Float operation.

Painted steel body.
Valve body and brass degasser.
Elastomer degasser seals.
PN16 flanged connections.

- Max operating pressure 10 Bar
- Max operating discharge pressure 10 Bar
- Max operating temperature 110 °C
- Allowed fluid water and water+glycol 30 %

MAXIMUM DISCHARGE PRESSURE 10 bar

IDEAL FOR INSTALLATION ON RETURN PIPING

Self-cleaning dirt separator/ flanged deaerator
Filtre séparateur de boues autonettoyant / séparateur d'air à brides
Самоочищающийся грязеотделитель / фланцевый деаэратор
Denisipator cu autocurățare/degazor cu flanșă
Desfangador autolimpiante / desaireador embridado
Selbstreinigender Schlammabscheider / geflanschter Entlüfter

Code	Size	Pack	Carton
2831.09.72	DN 50	1	1
2831.10.72	DN 65	1	1
2831.11.72	DN 80	1	1
2831.13.72	DN 100	1	1
2831.14.72	DN 125	1	1
2831.15.72	DN 150	1	1

Technical drawing on page 203

Dirt separator + embedded deaerator.
Flange suitable for coupling with counter-flange UNI EN 1092-1.
Magnetic version underway.
Availability during 2019.
Contact the RBM technical office for information regarding product availability.

026

3741



Thermal insulation for Airterm Dirt self-cleaning dirt separator/deaerator (flanged) consisting of half-casings made of expanded polyethylene with external antiscratch coating.

Fire behaviour class I
Density 33 kg/m³
Max operating temperature -40 ÷ +90 °C

NEW

Thermal shell for Airterm Dirt (flanged)
Coque thermique pour Airterm Dirt (filetée)
Теплоизоляционный кожух для Airterm Dirt (фланцевый)
Carcasă termică pentru Airterm Dirt (cu flanșă)
Protección térmica para Airterm Dirt (embridada)
Wärmeschale für Airtem Dirt (mit Flansch)

Code	Size	Pack	Carton
3741.09.02	DN50	1	1
3741.10.02	DN65	1	-
3741.11.02	DN80	1	1
3741.13.02	DN100	1	1
3741.14.02	DN125	1	1
3741.15.02	DN150	1	1

041

MG1®

COMPACT MAGNETIC SYSTEM FILTER

PATENT
N° 202015000064159

RBM Brass

THE ONLY ONE THAT IS REALLY COMPACT, IT CAN BE INSTALLED ALSO IN LIMITED SPACES



MG1 by RBM represents the best solution to solve plant problems due to particle pollution, especially rust and sand that are formed due to corrosion and scale during the normal operation of a system. Thanks to its compact dimensions, it is perfect when the boiler to be protected is installed in a kitchen cabinet or where installation spaces are very limited and there is no room for other dirt separators. Through its effective and constant action, the magnetic filter collects all the impurities present in the system, preventing them from circulating within it, thus avoiding wear and damage of the circulator and the heat exchanger.

- Super compact
- Retains all impurities
- Fights corrosion
- Increases the lifespan of the boiler
- Maintains optimum system efficiency

By going through a set course, the fluid is forced to cross the many areas that modify its motion and filter its content:

1. The sudden cross-section variation slows down the fluid and the particles suspended in it
2. The magnet inside the cylinder attracts all the ferrous impurities
3. Non-magnetic particles are retained by the mesh of the filtering cartridge

Continuous protection of the boiler

IDEAL FOR INSTALLATION ON RETURN PIPING

Swivel connection
it enables to easily connect the filter to connection G 3/4"M of the boiler.

Filtration chamber

Neodymium magnet

Ball valve
it enables to intercept the return circuit.

Drain cap

STAINLESS STEEL filtering cartridge

MAXIMUM INSTALLATION VERSATILITY:

It is advised to install MG1 on the return circuit, at the inlet of the boiler, in order to protect it from any impurities in the system, especially during the start-up phase. Thanks to its extreme installation versatility, MG1 can be mounted either with the cartridge/filter body facing the front and downwards.

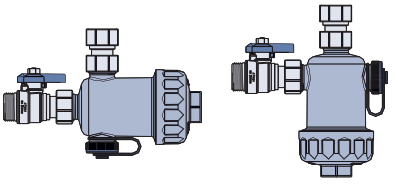

3070



MG1

Under-boiler magnetic sludge remover filter. Supplied complete with swivel filter/boiler connection fitting and ball valve.

Plastic polymer cartridge holder body.
Stainless steel AISI 304 filtering cartridge.
Elastomer hydraulic seals.
Threaded connections MF UNI-EN-ISO 228.

- Max operating pressure 3 Bar
- Operating temperature 0 ÷ +90 °C
- Neodymium magnet B = 11000 gauss
- B(T max) / B(T amb)* < 1%
- * T max = 130 °C - T amb = 21 °C
- Filtering grade 800 µm

Technical drawing on page 203

The 800 µm and 400 µm TZB filtering cartridges are available in the Spare Parts section.

Under-boiler magnetic sludge remover filter, black version
Filtre séparateur de boues magnétique sous-chaudière - version noir
Магнитный фильтр-грязеотделитель под котлом - черная версия
Filtru denisipator magnetic aflat sub centrală - versiune neagră
Filtro desfangador magnético bajo-caldera - versión negro
Magnetischer Schlammabscheider unter dem Heizkessel - Version schwarz

Code	Size	Kv (m³/h)	Pack	Carton
3070.05.00	G 3/4"	5,49	1	6

Patent nr 202015000064159

026A

3070



MG1 White

Under-boiler magnetic sludge remover filter. Supplied complete with swivel filter/boiler connection fitting and ball valve.

Plastic polymer cartridge holder body.
Stainless steel AISI 304 filtering cartridge.
Elastomer hydraulic seals.
Threaded connections MF UNI-EN-ISO 228.

- Max operating pressure 3 Bar
- Operating temperature 0 ÷ +90 °C
- Neodymium magnet B = 11000 gauss
- B(T max) / B(T amb)* < 1%
- * T max = 130 °C - T amb = 21 °C
- Filtering grade 800 µm

Technical drawing on page 203

The 800 µm and 400 µm TZB filtering cartridges are available in the Spare Parts section.

Under-boiler magnetic sludge remover filter, white version
Filtre séparateur de boues magnétique sous-chaudière - version blanc
Магнитный фильтр-грязеотделитель под котлом - белая версия
Filtru denisipator magnetic aflat sub centrală - versiune albă
Filtro desfangador magnético bajo-caldera - versión blanco
Magnetischer Schlammabscheider unter dem Heizkessel - Version weiß

Code	Size	Kv (m³/h)	Pack	Carton
3070.05.50	G 3/4"	5,49	1	6

Patent nr 202015000064159

026A

3701



MG1F

Under-boiler magnetic sludge remover filter. Supplied complete with swivel filter/boiler connection fitting and ball valve.

Plastic polymer cartridge holder body.
Stainless steel AISI 304 filtering cartridge.
Elastomer hydraulic seals.
Threaded connections MF UNI-EN-ISO 228.

- Max operating pressure 3 Bar
- Operating temperature 0 ÷ +90 °C
- Neodymium magnet B = 11000 gauss
- B(T max) / B(T amb)* < 1%
- * T max = 130 °C - T amb = 21 °C
- Filtering grade 800 µm



The 800 µm and 400 µm TZB filtering cartridges are available in the Spare Parts section.

Under-boiler magnetic sludge remover filter, black version
Filtre séparateur de boues magnétique sous-chaudière - version noir
Магнитный фильтр-грязеотделитель под котлом - черная версия
Filtru denisipator magnetic aflat sub centrală - versiune neagră
Filtro desfangador magnético bajo-caldera - versión negro
Magnetischer Schlammabscheider unter dem Heizkessel - Version schwarz

Code	Size	Kv (m³/h)	Pack	Carton
3701.05.80	G 3/4"	5,49	1	6

Patent nr 202015000064159

026A

3701



MG1F

Under-boiler magnetic sludge remover filter. Supplied complete with swivel filter/boiler connection fitting and ball valve.

Plastic polymer cartridge holder body.
Stainless steel AISI 304 filtering cartridge.
Elastomer hydraulic seals.
Threaded connections MF UNI-EN-ISO 228.

- Max operating pressure 3 Bar
- Operating temperature 0 ÷ +90 °C
- Neodymium magnet B = 11000 gauss
- B(T max) / B(T amb)* < 1%
- * T max = 130 °C - T amb = 21 °C
- Filtering grade 800 µm



The 800 µm and 400 µm TZB filtering cartridges are available in the Spare Parts section.

Under-boiler magnetic sludge remover filter, white version
Filtre séparateur de boues magnétique sous-chaudière - version blanc
Магнитный фильтр-грязеотделитель под котлом - белая версия
Filtru denisipator magnetic aflat sub centrală - versiune albă
Filtro desfangador magnético bajo-caldera - versión blanco
Magnetischer Schlammabscheider unter dem Heizkessel - Version weiß

Code	Size	Kv (m³/h)	Pack	Carton
3701.05.90	G 3/4"	5,49	1	6

Patent nr 202015000064159

026A

3174



Straight rotary fitting.

Threaded connections FF UNI-EN-ISO 228.

Fitting for filter/boiler connection

Straight rotary fitting
Raccord écrou libre droit
Поворотный прямой фитинг
Racord rotativ drept
Racor giratorio recto
Anschluss, drehbar gerade

Code	Size	Pack	Carton
3174.05.00	3/4"	1	6

040

3174



Curved rotary fitting.

Threaded connections FF UNI-EN-ISO 228.

Specific fitting for connection of MG1 to boilers with front connection (e.g. Vaillant model).

Curved rotary fitting
Raccord écrou libre courbe
Поворотный изогнутый фитинг
Racord rotativ curbat
Racor giratorio curvo
Anschluss, drehbar gekrümmt

Code	Size	Pack	Carton
3174.05.10	3/4"	1	6

040

3174



Flexible extendible fitting.

Threaded connections MF UNI-EN-ISO 228.
L 80 ÷ 120 mm

Fitting for filter connection

Flexible extendible fitting
Raccord flexible extensible
Гибкий растяжимый фитинг
Racord flexibil extensibil
Racor flexible extensible
Anschluss flexibel verlängerbar

Code	Size	Pack	Carton
3174.05.30	3/4"	1	6

040

3174



Ball valve with rotary connection.

Threaded connections MF UNI-EN-ISO 228.

Ball valve with rotary connection
Vanne à bille avec écrou libre
Шаровой клапан с поворотным креплением
Robinet cu bilă cu prindere rotativă
Válvula de bola con conexión giratoria
Kugelventil mit drehbarem Anschluss

Code	Size	Pack	Carton
3174.05.20	3/4"	1	6

041

3711



MG1 black kit + polyphosphate doser
Kit MG1 noir + doseur de polyphosphates
Комплект MG1 черный + дозатор полифосфатов
Kit MG1 negru + dozator de polifosfați
Kit MG1 negro + dosificador de polifosfatos
Bausatz MG1 schwarz + Polyphosphatdosierer

Code	Pack	Carton
3711.00.00	1	6

MG1 white kit + polyphosphate doser
Kit MG1 blanc + doseur de polyphosphates
Комплект MG1 белый + дозатор полифосфатов
Kit MG1 alb + dozator de polifosfați
Kit MG1 blanco + dosificador de polifosfatos
Bausatz MG1 weiß + Polyphosphatdosierer

Code	Pack	Carton
3711.00.50	1	6

MG1 black kit + polyphosphate doser with bypass
Kit MG1 noir + doseur de polyphosphates avec bypass
Комплект MG1 черный + дозатор полифосфатов с байпасом
Kit MG1 negru + dozator de polifosfați cu by-pass
Kit MG1 negro + dosificador de polifosfatos con by-pass
Bausatz MG1 schwarz + Polyphosphatdosierer mit Nebenleitung

Code	Pack	Carton
3711.00.10	1	6

MG1 white kit + polyphosphate doser with bypass
Kit MG1 blanc + doseur de polyphosphates avec bypass
Комплект MG1 белый + дозатор полифосфатов с байпасом
Kit MG1 alb + dozator de polifosfați cu by-pass
Kit MG1 blanco + dosificador de polifosfatos con by-pass
Bausatz MG1 weiß + Polyphosphatdosierer mit Nebenleitung

Code	Pack	Carton
3711.00.60	1	6

“Gli Indispensabili” kit

Under-boiler magnetic sludge remover filter kit MG1+ polyphosphate doser (with or without by-pass)

026

GLI INDISPENSABILI

MAGNETIC SUPER-COMPACT SYSTEM FILTER
POLYPHOSPATE SALT FEEDER

RBM Brass





1 FEEDER INCLUDED

UNI 8065
CHEMICAL CONDITIONING COMPULSORY IN SYSTEMS

- It protects hydraulic system from limescale and corrosion.
- Supplied complete with nr. 1 refill of sodium polyphosphate.



UNI 8065
FILTRATION COMPULSORY IN SYSTEMS OF ANY KIND AND POWER

- Super compact
- Retains all impurities
- Fights corrosion
- Increases the lifespan of the boiler
- Maintains optimum system efficiency

67% FILTERING EFFICIENCY N°1 OF THE CATEGORY

IDEAL FOR INSTALLATION ON RETURN PIPING

MG1 by RBM represents the best solution to solve plant problems due to particle pollution, **especially rust and sand that are formed due to corrosion** and scale during the normal operation of a system. Thanks to its **compact dimensions**, it is perfect when the boiler to be protected is installed in a kitchen cabinet or where installation spaces are very limited and there is no room for other dirt separators.

Through its effective and constant action, the magnetic filter collects all the impurities present in the system, preventing them from circulating within it, thus avoiding wear and damage of the circulator and the heat exchanger.

MAXIMUM INSTALLATION VERSATILITY:

It is advised to install MG1 on the return circuit, at the inlet of the boiler, in order to protect it from any impurities in the system, especially during the start-up phase. Thanks to its extreme installation versatility, MG1 can be mounted either with the cartridge/filter body facing the front and downwards.

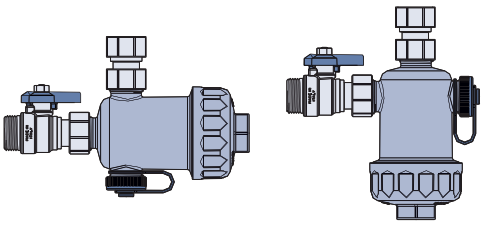

SafeCleaner2

MULTIFUNCTION MAGNETIC DIRT SEPARATOR FILTER FOR HYDRAULIC CIRCUITS

RBM Brass

RBM SafeCleaner2 represents the best solution to solve plant problems due to particle pollution, especially rust and sand, that are formed due to corrosion and scale during the normal operation of a system. Through its effective and constant action, the magnetic filter collects all the impurities present in the circuit, preventing them from circulating within it, thus avoiding wear and damage of all the components making up the system.
The impurities caught by the filter build up on the bottom of it and are eliminated by simply opening the drain plug.

This way all the magnetic contaminants (ferrous residues) and non-magnetic (algae, sludge, sand...) in the system are removed.



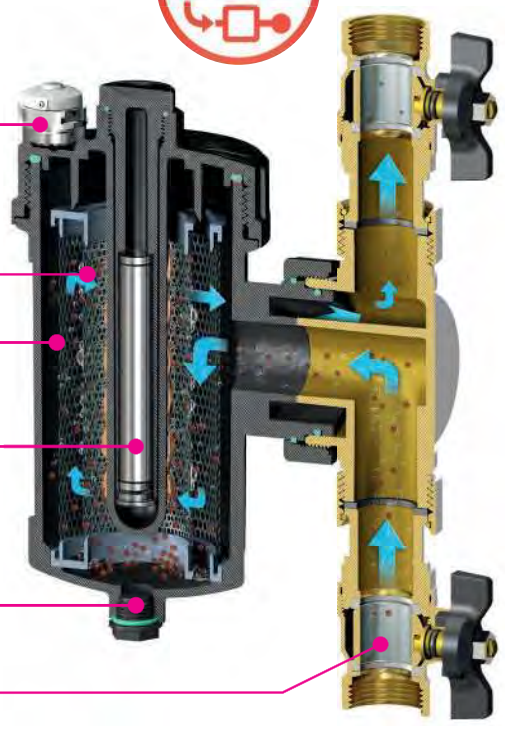

- Retains all impurities
- Self-cleaning
- Excellent hydraulic properties
- Can be mounted on vertical, horizontal and diagonal piping
- Increases the lifespan of the boiler
- Fights corrosion
- Maintains optimum system efficiency
- Easy dosing of the treatment fluids with 0.5l doses

The large filtering chamber and the choice of using a filter with wide meshes keep SafeCleaner2 from clogging

Simple cleaning operations:

- Shut off the ball valves
- Remove the magnet from the upper cap
- Open the drain plug and let water flow out.

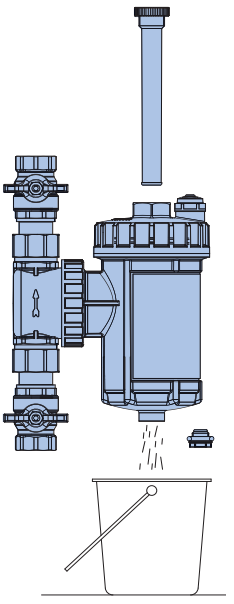

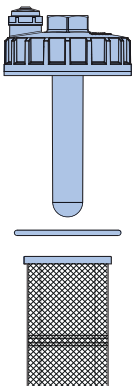

For a more thorough cleaning of the sludge remover, the filter cap can be completely removed so as to extract the filtering mesh and allow for cleaning and replacement operations.

2405



SafeCleaner2

Multifunction polymer magnetic dirt separator, diverter in brass, FF connection.

Plastic polymer cartridge holder body.
Nickel plated brass diverter valve.
Stainless steel AISI 304 filtering cartridge.
Elastomer hydraulic seals.
Threaded connections FF UNI-EN-ISO 228.

- Max operating pressure 4 Bar
- Operating temperature 0 ÷ +90 °C
- Neodymium magnet B = 11000 gauss
- B(T max) / B(T amb)* < 1%
- *T max = 130 °C - T amb = 21 °C

Multi-function magnetic sludge remover filter, brass diverter valve body, FF connections
Filtre séparateur de boues magnétique multifonction corps déviateur en laiton, raccords FF
Многофункциональный магнитный фильтр-грязеотделитель, корпус девиатора из латуни крепления ВНУТР.-ВНУТР. резьба
Denisipator magnetic multifuncțional, corp deviator din alamă, prinderi Mamă-Mamă
Filtro desfangador magnético multifunción cuerpo desviador en latón conexiones HH
Magnetischer Multifunktions-Schlammabscheider, Verzweigerkörper aus Messing, Anschlüsse IG/IG

Code	Size	Kv (m³/h)	Pack	Carton
2405.05.00	G 3/4"	6,81	1	6
2405.06.00	G 1"	7,51	1	4

Technical drawing on page 204

Possibility of mounting series 2343 accessory connector (see page 84) for system washing.

026

2344



SafeCleaner2

Multifunction polymer magnetic dirt separator, diverter in brass, with FF ball valves connection.

Plastic polymer cartridge holder body.
Nickel plated brass diverter valve.
Stainless steel AISI 304 filtering cartridge.
Elastomer hydraulic seals.
Threaded connections FF UNI-EN-ISO 228.

- Max operating pressure 4 Bar
- Operating temperature 0 ÷ +90 °C
- Neodymium magnet B = 11000 gauss
- B(T max) / B(T amb)* < 1%
- *T max = 130 °C - T amb = 21 °C

Multi-function magnetic sludge remover filter, brass diverter valve body, with FF connection ball valves
Filtre séparateur de boues magnétique multifonction déviateur en laiton avec vannes à bille à raccord FF
Многофункциональный магнитный фильтр-грязеотделитель, корпус девиатора из латуни с шаровыми клапанами крепления ВНУТР.-ВНУТР. резьба
Filtru denisipator magnetic multifuncțional, corp deviator din alamă cu robinete cu bilă, prindere Mamă-Mamă
Filtro desfangador magnético multifunción cuerpo desviador de latón con válvulas de bola conexión HH
Magnetischer Multifunktions-Schlammabscheider, Verzweigerkörper aus Messing, mit Kugelventilen, Anschluss IG/IG

Code	Size	Kv (m³/h)	Pack	Carton
2344.05.50	G 3/4"	6,81	1	6
2344.06.50	G 1"	7,51	1	4
2344.07.50	G 1"1/4	7,51	1	4

Technical drawing on page 204

Possibility of mounting series 2343 accessory connector (see page 84) for system washing.

026

2319



SafeCleaner2

Multifunction polymer magnetic dirt separator, with FF ball valves connection.

Plastic polymer cartridge holder body.
Plastic polymer diverter valve.
Stainless steel AISI 304 filtering cartridge.
Elastomer hydraulic seals. Threaded connections FF UNI-EN-ISO 228.

- Max operating pressure 4 Bar
- Operating temperature 0 ÷ +90 °C
- Neodymium magnet B = 11000 gauss
- B(T max) / B(T amb)* < 1%
- *T max = 130 °C - T amb = 21 °C

Multi-function magnetic sludge remover filter, polymer diverter, with FF connection ball valves
Filtre séparateur de boues magnétique multifonction déviateur en polymère avec vannes à bille à raccord FF
Многофункциональный магнитный фильтр-грязеотделитель, девиатор из полимера с шаровыми клапанами, крепления ВНУТР.-ВНУТР. резьба
Filtru denisipator magnetic multifuncțional, deviator din polimer, cu robinete cu bilă, prindere Mamă-Mamă
Filtro desfangador magnético multifunción desviador en polímero con válvulas de bola conexión HH
Magnetischer Multifunktions-Schlammabscheider, Verzweigerkörper aus Polymer, mit Kugelventilen, Anschluss IG/IG

Code	Size	Kv (m³/h)	Pack	Carton
2319.05.50	G 3/4"	6,81	1	6
2319.06.50	G 1"	7,51	1	4
2319.07.50	G 1"1/4	7,51	1	4

Technical drawing on page 204

Possibility of mounting series 2343 accessory connector (see page 84) for system washing.

026

3746



Thermal insulation for Safe Cleaner 2 multi-function magnetic dirt separator, consisting of half-casings made of expanded polyethylene with external antiscratch coating.

Fire behaviour class I
Density 33 kg/m³
Max operating temperature -40 ÷ +90 °C

Thermal shell for Safecleaner 2
Coque thermique pour Safecleaner 2
Теплоизоляционный кожух для Safecleaner 2
Carcasă termică pentru Safecleaner 2
Protección térmica para Safecleaner 2
Wärmeschale für Safecleaner 2

Code	Size A	Size B		Pack	Carton
3746.05.12	3/4" F	1" F	1"1/4 F	1	1

041

MAG-NUS2

SELF-CLEANING DIRT SEPARATOR WITH MAGNET FOR HYDRAULIC CIRCUITS



RBM Mag-nus2 is a self-cleaning dirt separator with magnet suitable for hydraulic systems. It is an extremely innovative product created to remove any type of impurity from heating systems.

RBM Mag-nus2 is the best solution to solve problems caused by particle pollution, especially rust and sand, formed by corrosion. This device helps maintaining the high efficiency of the system, preventing pipe obstruction and boiler failures.
Through its effective action, the magnet attracts iron particles avoiding damages caused by free movements of these into the system.

Impurities (iron, rust, sand, seaweeds) collected in the filter can be removed through the drain valve.

RBM Mag-nus2 must be installed with the drain valve pointing to the bottom.

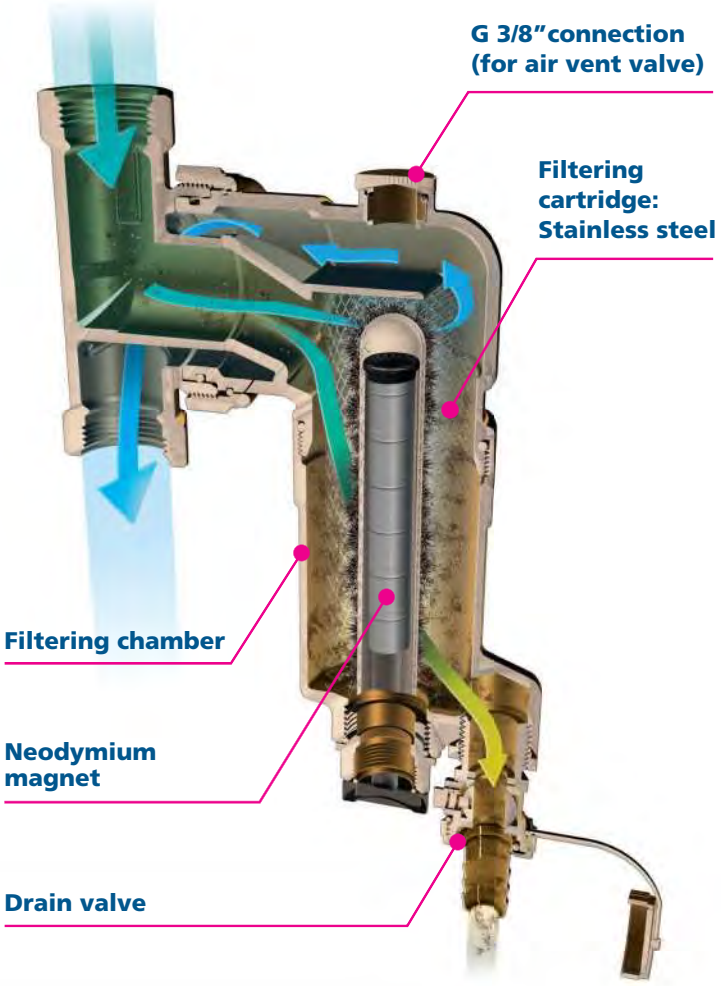

- Removes any impurity
- Self-cleaning
- Excellent hydraulic properties
- Can be mounted on vertical, horizontal and diagonal piping
- Extends boiler lifespan
- Fights corrosion
- Ensures system efficiency
- Limited overall dimensions



Thanks to the telescopic mounting ring nut, it is easy to fast install **RBM Mag-nus2** in any position:

- **STRAIGHT**
- **VERTICAL**
- **DIAGONAL**

In the upper part there is a female connection G 3/8" that can be used to connect also an automatic air vent valve RBM code 37.03.60.

3548



Mag-nus2

Self-cleaning magnetic sludge remover filter for hydraulic systems. Provided with drain ball cock with hose end connector.

Brass body.
Stainless steel AISI 304 filtering cartridge.
Elastomer hydraulic seals.
Threaded connections FF UNI-EN-ISO 228.

- Max operating pressure 10 Bar
- Operating temperature 0 ÷ +100 °C
- Max operating temperature 130 °C
- Neodymium magnet B = 11000 gauss
- B(T max) / B(T amb)* < 1%
- *T max = 130 °C - T amb = 21 °C

Self-cleaning magnetic sludge remover filter for hydraulic systems
Filtre séparateur de boues magnétique autonettoyant pour circuits hydrauliques
Самоочищающийся магнитный фильтр-грязеотделитель для гидравлических контуров
Filtru denisipator magnetic cu autocurățare pentru circuite hidraulice
Filtro desfangador magnético autolimpiante para circuitos hidráulicos
Magnetischer, selbstreinigender Schlammabscheider für Hydraulikkreisläufe

Code	Size	Kv (m³/h)	Pack	Carton
3548.05.00	G 3/4"	9,50	1	4
3548.06.00	G 1"	10,30	1	4

Technical drawing on page 203

Possibility of mounting series 2343 accessory connector (see page 84) for system washing.

026

3747



Thermal insulation for Mag-Nus2 self-cleaning magnetic dirt separator consisting of expanded polyethylene half-casings with external antiscratch coating.

Fire behaviour class I
Density 33 kg/m³
Max operating temperature -40 ÷ +90 °C

Thermal shell for Mag-Nus 2
Coque thermique pour Mag-Nus 2
Теплоизоляционный кожух для Mag-Nus 2
Carcasă termică pentru Mag-Nus 2
Protección térmica para Mag-Nus 2
Wärmeschale für Mag-Nus 2

Code	Size A	Size B	Pack	Carton
3747.05.12	3/4" F	1" F	1	1

041

3699



MP1

Self-cleaning magnetic sludge remover filter for heating pump.

Complete with integrated shut-off device and discharge ball cock.

Body in plastic polymer.
AISI 304 stainless steel reinforced filtering cartridge.
Elastomer hydraulic seals.
Threaded connections MM UNI-EN-ISO 228.

- Max operating pressure 6 Bar
- Operating temperature 0 ÷ +90 °C
- Neodymium magnet B = 11000 gauss
- Filtering grade 800 µm

Self-cleaning magnetic sludge remover filter for heating pumps.
Filtre séparateur de boues magnétique autonettoyant pour pompes à chaleur
Самоочищающийся магнитный фильтр-грязеотделитель для тепловых насосов
Filtru denisipator magnetic cu autocurățare pentru pompe de căldură
Filtro desfangador magnético autolimpiante para bombas de calor
Magnetischer, selbstreinigender Schlammabscheider für Wärmepumpen

Code	Size	Pack
3699.06.00	G 1"	1

Technical drawing on page 204

026

3773

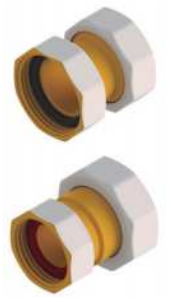

041

Double swivel straight fitting 1"1/4F x 1"1/4F

Double swivel straight fitting 1"1/4F x 1"1/4F
Raccord double pivotant droit 1"1/4F x 1"1/4F
Двойной поворотный прямой фитинг 1"1/4F x 1"1/4F
Racord dublu rotativ drept 1"1/4F x 1"1/4F
Racor doble giratorio recto 1"1/4H x 1"1/4H
Doppeltes, drehbares, gerades Verbindungsstück 1"1/4F x 1"1/4F

Code	Size A	Size B	Pack	Carton
3773.07.00	G 1"1/4 F	1"1/4 F	1	1
3773.07.10	G 1"1/4 F	1" F	1	1

3773



041

Curved spherical fitting 1"1/4F x 1"1/4M

Curved spherical fitting 1"1/4F x 1"1/4M
Raccord courbe sphérique 1"1/4F x 1"1/4M
Изогнутый фитинг шаровой 1"1/4F x 1"1/4M
Racord curbat sferic 1"1/4F x 1"1/4M
Racor curvado esférico 1"1/4H x 1"1/4M
Gekrümmtes Kugel-Verbindungsstück 1"1/4F x 1"1/4M

Code	Size	Pack	Carton
3773.07.20	G 1"1/4 F	1	1

812



041

Press fitting for Tita-fix multilayer pipe.

Multi-clamp fitting.
Compatible with clamps series:
- TH, H, U, B for Ø 14x2;
- TH, H, U, B, F for Ø 16x2 - 18x2 and 20x2;
- TH, H, B for Ø 26x3;
- TH, H for Ø 32x3;

Externally nickel-plated brass body
Elastomer seals
Stainless steel pipe clamping bush
Dielectric pipe clamp cover in PE
Threaded connection UNI-EN-ISO 228
Max operating temperature 95 °C
Max operating pressure 10 Bar

CSTB (only ø 16x2 - 20x2 - 26x3 - 32x3 / Certification applicable only if matched with CSTB certified "RBM TITA-FIX" pipe). - EN ISO 21003 2/10, 4/6, 5/6 bar

Press fitting for multilayer pipe - rotary nut - flat seat gas thread
Raccord à sertir pour tube multicouche - écrou libre - filetage gaz portée plate
Пресс-фитинг для металлопластиковых труб - с накидной гайкой - резьба плоское уплотнение
Racord cu presare pentru conductă multistrat - piuliță rotantă - filet gaz garnitură plată
Racor Press Fitting Gas recto con tuerca loca para junta plana para tubo multicapa gas
Steckanschluss für Mehrschichtverbundrohr Überwurfmutter - Gasgewinde flach dichtend

Code	Size A	Size B	Pack	Carton
812.14.10	14x2	3/8" F	10	200
812.14.20	14x2	1/2" F	10	200
812.16.10	16x2	3/8" F	10	200
812.16.20	16x2	1/2" F	10	200
812.16.30	16x2	3/4" F	10	160
812.18.30	18x2	3/4" F	10	160
812.20.20	20x2	1/2" F	10	160
812.20.30	20x2	3/4" F	10	160
812.26.30	26x3	3/4" F	10	100
812.26.40	26x3	1" F	10	100
812.26.50	26x3	1"1/4 F	1	1
812.32.50	32x3	1"1/4 F	10	80

3744



Thermal insulation for Dirterm self-cleaning dirt separator (threaded) consisting of half-casings made of expanded polyethylene with external antiscratch coating.

Fire behaviour class I
Density 33 kg/m³
Max operating temperature -40 ÷ +90 °C

NEW

Thermal shell for Dirterm Mag
Coque thermique pour Dirtem Mag
Теплоизоляционный кожух для Dirtem Mag
Carcasă termică pentru Dirtem Mag
Protección térmica para Dirtem Mag
Wärmeschale für Dirtem Mag

Code	Size	Pack	Carton
3744.04.12	1/2" F	1	1
3744.05.12	3/4" F	1	1
3744.06.12	1" F	1	1
3744.07.12	1"1/4 F	1	1
3744.08.12	1"1/2 F	1	1
3744.09.12	2" F	1	1

041

2863



Airterm Mag
Self-cleaning dirt separator / deaerator.
Float operated deaerator.
Provided with drain ball valve with hose end connector.

Brass body.
Stainless steel AISI 304 2 Layers filtering cartridge.
Elastomer hydraulic seals.
Threaded connections FF UNI-EN-ISO 228.

- Max operating pressure 10 Bar
- Max operating discharge pressure 10 Bar
- Operating temperature 0 ÷ +110 °C
- Neodymium magnet B = 11000 gauss

MAXIMUM DISCHARGE PRESSURE 10 bar

IDEAL FOR INSTALLATION ON RETURN PIPING

Self-cleaning magnetic dirt separator / deaerator
Filtre séparateur de boues autonettoyant/ séparateur d'air
Самоочищающийся магнитный фильтр-грязеотделитель / деаэратор
Denisipator magnetic cu autocurățare / Degazor
Desfangador magnético autolimpiante / desaireador
Magnetischer, selbstreinigender Schlammabscheider / Entlüfter

Code	Size	Kv (m³/h)	Pack	Carton
2863.04.00	G 1/2"	7,40	1	6
2863.05.00	G 3/4"	12,66	1	6
2863.06.00	G 1"	20,44	1	6
2863.07.00	G 1"1/4	28,14	1	6

Technical drawing on page 203

Magnetic dirt separator + embedded deaerator.

026

3745



Thermal insulation for Airterm Mag self-cleaning dirt separator consisting of half-casings made of expanded polyethylene with external antiscratch coating.

Fire behaviour class I
Density 33 kg/m³
Max operating temperature -40 ÷ +90 °C

NEW

Thermal shell for Airterm Mag
Coque thermique pour Airterm Mag
Теплоизоляционный кожух для Airterm Mag
Carcasă termică pentru Airterm Mag
Protección térmica para Airterm Mag
Wärmeschale für Airterm Mag

Code	Size	Pack	Carton
3745.04.12	1/2" F	1	1
3745.05.12	3/4" F	1	1
3745.06.12	1" F	1	1
3745.07.12	1"1/4 F	1	1

041

DIRTERM & DIRTERM MAG

SELF-CLEANING DIRT SEPARATORS

Dirterm represents the best solution to solve plant problems due to particle pollution formed due to corrosion and scale during the normal operation of a system.
Through its effective and constant action, Dirterm collects all the impurities present in the system (even very small which traditional mesh filters are not able to eliminate), preventing them from circulating within it, thus avoiding wear and damage of all the components making up the system.
The impurities stopped by Dirterm are accumulated on its bottom as long as the opening of the specific discharge valve allows the expulsion thereof.

In addition, **Dirterm Mag**, is equipped with a powerful magnet to capture rust particles that are formed due to corrosion and scale during the normal operation of a system.



DIRTERM
dirt separator



DIRTERM MAG
magnetic dirt separator

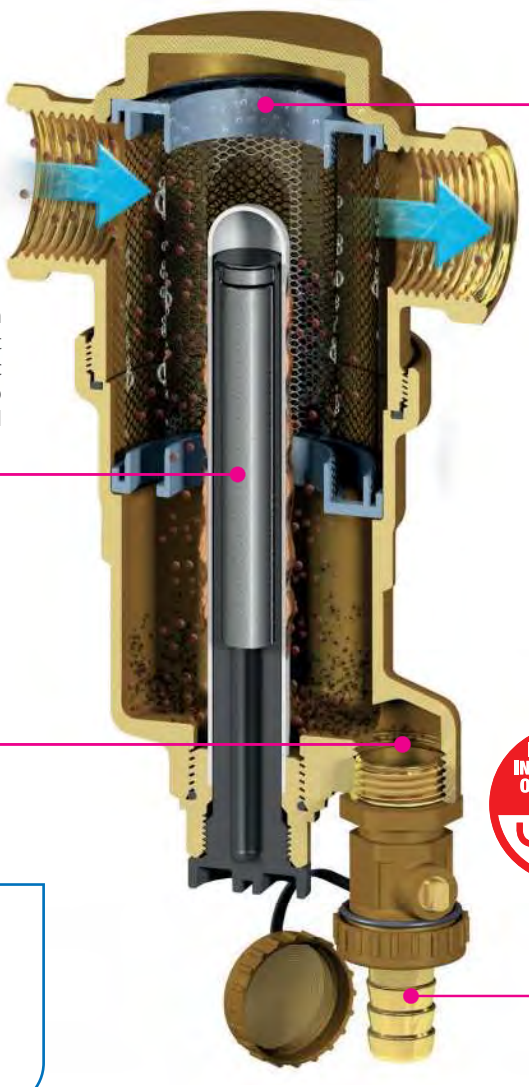



Magnet (11.000 gauss)

(Only available in the **Dirterm Mag** device) Powerful magnet to capture particles magnetic that are formed due to corrosion during the normal operation of a system.

Innovative Cartridge



made up of stainless steel sheets with different filtering grades. Stainless steel is an exceptional guarantee of long service life, maximum reliability in variable pressure, temperature, greater resistance to corrosion and wear conditions, generated by impurities (as it is increasingly less possible to predict what they are comprised of).

The cartridge contributes to minimising the possibility of impurities running through and offers little resistance to the flow passage, characterised by very low head loss.
The special cartridge does not obstruct the descent of the dirt into the accumulation zone in any way, therefore there is no danger of the particles being recovered by the flow running towards the outlet of the dirt separator.

Accumulation area

Large and very far from the flow passage, resulting in less frequent maintenance work.



- Eliminates all impurities;
- Self-cleaning;
- Ensures system efficiency;
- Magnetic (only Dirterm Mag);
- Bi-directional



Purge valve

Adjustable, with hose connector and safety cap.

AIRTERM DIRT & AIRTERM MAG

COMBINED SELF-CLEANING DIRT SEPARATORS / DEAERATORS

Airterm Dirt combines the functions of common dirt separators and deaerators in a single solution. They are used to remove air and impurities from hydraulic circuits.

In addition, **Airterm Mag** is equipped with a powerful magnet to capture particles such as rust and sand that are formed due to corrosion and scale during the normal operation of a system.

MAXIMUM DISCHARGE PRESSURE 10 bar



AIRTERM DIRT
Dirt separator / deaerator



AIRTERM MAG
Magnetic dirt separator / deaerator

ADVANTAGES

Merging two different components into one solution has allowed us to significantly reduce overall dimensions with respect to the installation of two separate products: dirt separator + deaerator.

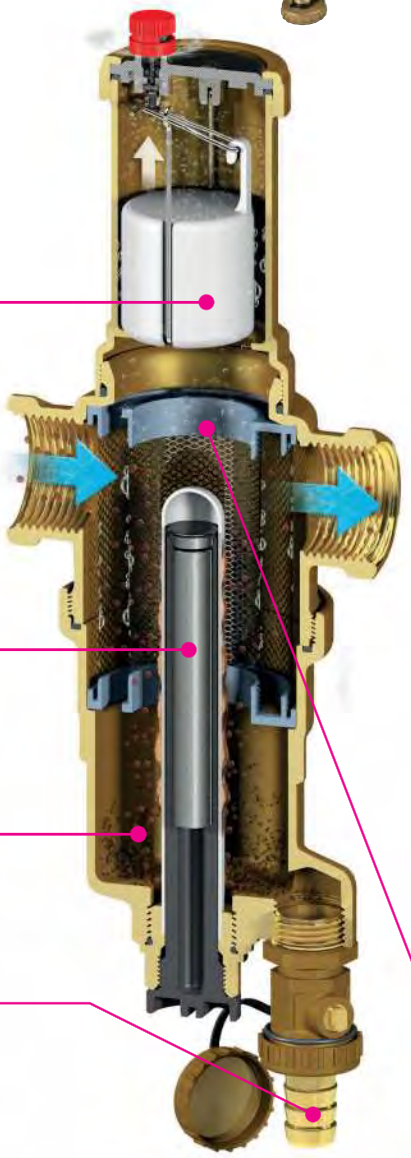

Passive part
High-performance air vent valve (discharge guaranteed up to 10 bar).



Magnet
(Only available in the Airtem Mag device) Powerful magnet to capture particles magnetic that are formed due to corrosion during the normal operation of a system.

Accumulation area
Large and very far from the flow passage, resulting in less frequent maintenance work.

Purge valve
Adjustable, with hose connector and safety cap.



Innovative cartridge
made up of stainless steel sheets with different filtering grades. Stainless steel is an exceptional guarantee of long service life, maximum reliability in variable pressure, temperature, greater resistance to corrosion and wear conditions, generated by impurities (as it is increasingly less possible to predict what they are comprised of). The flow goes directly through the cartridge and the continuous changes in sections lead to the creation of swirling movements which promote the release of micro bubbles.
The micro bubbles settle on the internal metal cage and, after reaching an adequate size, they move upwards and are ejected by the passive part of the device. At the same time, this contributes to minimising the possibility of impurities running through and offers little resistance to the flow passage, characterised by very low head loss. The special cartridge does not obstruct the descent of the dirt into the accumulation zone in any way, therefore there is no danger of the particles being recovered by the flow running towards the outlet of the dirt separator.

- Eliminates all impurities
- Self-cleaning
- Ensures system efficiency
- Large capacity discharge
- High performance (max. discharge pressure 10 bar)
- Multifunction: Built-in dirt separator and deaerator
- Magnetic (Only Airterm Mag)
- Bi-directional

IDEAL FOR INSTALLATION ON RETURN PIPING

3602



MG Compact

Compact self-cleaning magnetic sludge remover filter for hydraulic systems . With drain ball cock. Suitable for boiler room.

Main body in painted steel on the outside.
Steel cover.
Elastomer seals.
AISI stainless steel filter cartridge

- Max operating pressure 10 Bar
- Max operating temperature 95 °C
- Neodymium magnet
- Filtering grade 100 µm

Technical drawing on page 204

Compact self-cleaning magnetic sludge remover filter for boiler room
Filtre séparateur de boues magnétique autonettoyant compact pour unité de contrôle thermique
Компактный самоочищающийся магнитный фильтр-грязеотделитель для котельной
Filtru denisipator magnetic cu autocurățare compact, pentru centrala termică
Filtro desfangador magnético autolimpiante compacto para central térmica
Kompakter, magnetischer, selbstreinigender Schlammabscheider für Heizanlage

Code	Size	Kv (m³/h)	Pack	Carton
3602.04.00	G 1/2"	5,50	1	1
3602.05.00	G 3/4"	9,87	1	1
3602.06.00	G 1"	16,59	1	1
3602.07.00	G 1"1/4	31,10	1	1
3602.08.00	G 1"1/2	50,60	1	1
3602.09.00	G 2"	81,00	1	1

026

3611



Thermal shell

Thermal insulation consisting of semi-casings and expanded polyethylene cover with external anti-scratch film coating.

Half-bearings fixed with double-sided adhesive tape already applied.

- Fire behaviour class I
- Density 33 kg/m³
- Max operating temperature -40 ÷ +90 °C

Thermal insulation suitable for 3602 series MG Compact magnetic dirt separator filter insulation.

MG Compact magnetic dirt separator filter thermal casing
Coque thermique filtre magnétique MG Compact
Теплоизоляционный кожух самоочищающийся магнитный фильтр-грязеотделитель MG Compact
Înveliș termic filtru denisipator magnetic MG Compact
Protección térmica filtro extractor de lodos magnético MG Compact
Wärmeschale magnetischer Schlammabscheidefilter MG Compact

Code	Size	Pack	Carton
3611.00.02	1/2" ÷ 2"	1	1

041

MG COMPACT

SELF-CLEANING DIRT SEPARATOR WITH MAGNETS FOR BOILER ROOMS



RBM MG Compact, a self-cleaning multifunction dirt separator filter with magnets for boiler rooms, represents the best solution to solve plant problems due to pollution resulting from particles of sand and rust that form due to corrosion and incrustations during the normal operation of a system. Thanks to **its powerful magnetic capacity, its size and the flanged connections, MG Compact is used in industrial, commercial and medium and large-scale civil systems**. Through its effective and constant action, the filter collects all the impurities present in the system, preventing them from circulating within it, thus avoiding wear and damage of all the components making up the system.
The impurities blocked by the filter accumulate inside the basket. Cleaning starts by opening the designated discharge valve. In this way all the **magnetic contaminants** (ferrous residues) and **non-magnetic** (algae, sludge, sand...) in the system are removed.

- Removes any impurity
- Self-cleaning
- Maintains optimum system efficiency
- Application in industrial, commercial and medium and large-scale civil systems
- Reinforced stainless steel filtering mesh with 100 micron filtering degree
- Fitted with a dosage point to add treatment
- fluids, easily accessible
- Limited overall dimensions (in relation to the product category)
- Reversible couplings
- Option of in-line installation on a heating system
- Reduced maintenance costs:
  - > Magnets protected from contact with water, easy to clean
  - > The large removable basket with check valve prevents impurities from falling into the filter
  - > The large water content extends maintenance intervals
  - > The possibility of cleaning the filter without emptying completely reduces the amount of chemical additives to be replenished after each maintenance operation
- Anti-condensation insulation casing available upon request

IDEAL FOR INSTALLATION IN BOILER ROOMS

Automatic air vent valve
to eliminate air at the filling stage, complete with the ball shut-off valve.

Dosage point
to add treatment fluids. Aesily accessible. Plugged when supplied. G 1/2" plug.

Sudden section increase
It causes the fluid to slow down. The settling of particles due to the effect of gravity is favoured.

Wall mounting bracket

Magnetic filtering unit
Powerful neodymium magnets to capture ferrous particles such as rust that form due to corrosion during the normal operation of a system, metal debris, processing residues, etc. The magnet assembly is protected from direct contact with water by a removable conduit that makes filter cleaning operations easier.

Filtering mesh
Stainless steel stretched mesh (100 micron filtration degree) contained in a basket that can be easily pulled out from above. This is equipped with an automatic closing shutter, located at the bottom, to prevent leakage of impurities during maintenance.

Accumulation zone
Large and very far from the flow passage, resulting in less frequent maintenance work.

Drain ball valve
Size 3/4".

LEGEND: Dirty water Clean water

AVAILABLE INSTALLATION SETUPS:

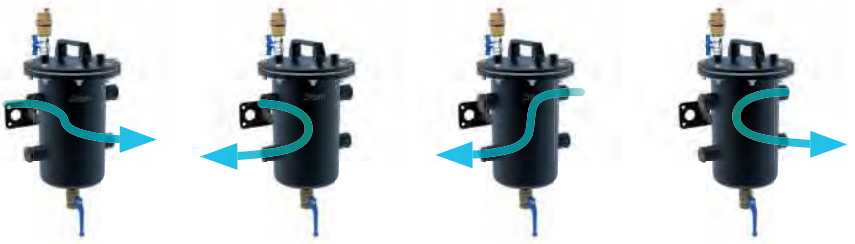

3541



MG Plus
Self-cleaning magnetic sludge remover filter for hydraulic systems. With drain ball cock. Suitable for boiler room.

Main body and flanges in painted steel on the outside
Steel cover
Elastomer seals
AISI stainless steel filter basket
Pair of pressure gauges, 0-10 bar scale
PN16 flanged couplings

- Max operating pressure 10 Bar
- Max operating temperature 95 °C
- Neodymium magnets
- Filtering grade 100 µm

Self-cleaning magnetic sludge remover filter for boiler room
Filtre séparateur de boues magnétique autonettoyant pour unité de contrôle thermique
Самоочищающийся магнитный фильтр-грязеотделитель для котельной
Filtru denisipator magnetic cu autocurățare pentru centrala termică
Filtro desfangador magnético autolimpiante para central térmica
Magnetischer, selbstreinigender Schlammabscheider für Heizanlage

Code	Size	Kv (m³/h)	Pack	Carton
3541.09.10	DN 50	14* - 23**	1	1
3541.10.10	DN 65	35* - 46**	1	1
3541.11.10	DN 80	42* - 57**	1	1
3541.13.10	DN 100	55* - 73**	1	1
3541.14.10	DN 125	100* - 131**	1	1
3541.15.10	DN 150	141* - 173**	1	1

** Flow rate with 20 kPa pressure drop*
*** Flow rate with 30 kPa pressure drop*

Technical drawing on page 204

Flange suitable for coupling with counter-flange UNI EN 1092-1.

026

3601



Thermal shell
Thermal insulation consisting of semi-casings and expanded polyethylene cover with external anti-scratch film coating.

Half-bearings fixed with double-sided adhesive tape already applied.

- Fire behaviour class I
- Density 33 kg/m³
- Max operating temperature -40 ÷ +90 °C

MG Plus magnetic dirt separator filter thermal casing
Coque thermique filtre magnétique MG Plus
Теплоизоляционный кожух самоочищающегося магнитного фильтра-грязеотделителя
Carcasă termică pentru filtrul separator de nămol magnetic MG Plus
Protección térmica filtro desfangador magnético MG Plus
Thermisches Gehäuse magnetischer Entschlammungsfilter MG Plus

Code	Size	Pack	Carton
3601.09.02	DN 50	1	1
3601.10.02	DN 65	1	1
3601.11.02	DN 80	1	1
3601.13.02	DN 100	1	1
3601.14.02	DN 125	1	1
3601.15.02	DN 150	1	1

Thermal insulation suitable for 3541 series MG Plus magnetic dirt separator filter insulation.

041

MG PLUS

SELF-CLEANING DIRT SEPARATOR WITH MAGNETS FOR BOILER ROOMS



IDEAL FOR INSTALLATION IN BOILER ROOMS

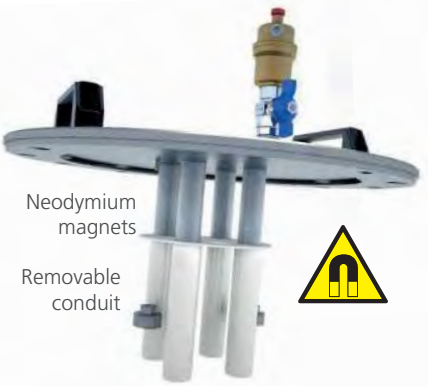

MG Plus, a self-cleaning multifunction dirt separator filter with magnets for boiler rooms, represents the best solution to solve plant problems due to pollution resulting from particles of sand and rust that form due to corrosion and incrustations during the normal operation of a system. Thanks to **its powerful magnetic capacity, its size and the flanged connections, MG Plus is used in industrial, commercial and large-scale civil systems.** Through its effective and constant action, the filter collects all the impurities present in the system, preventing them from circulating within it, thus avoiding wear and damage of all the components making up the system. The impurities blocked by the filter accumulate inside the basket. Cleaning starts by opening the designated discharge valve. In this way all the magnetic contaminants (ferrous residues) and non-magnetic (algae, sludge, sand...) in the system are removed.

- Removes any impurity
- Self-cleaning
- Maintains optimum system efficiency
- Application in industrial, commercial and large-scale civil systems
- Reinforced stainless steel filtering mesh with 100 micron filtering degree
- Fitted with a dosage point to add treatment fluids, easily accessible
- Limited overall dimensions (in relation to the product category)
- Reduced maintenance costs:
  - > Magnets protected from contact with water, easy to clean
  - > The large removable basket with check valve prevents impurities from falling into the filter
  - > The large water content extends maintenance intervals
  - > The possibility of cleaning the filter without emptying completely reduces the amount of chemical additives to be replenished after each maintenance operation
- Anti-condensation insulation casing available upon request

Magnetic filtering unit

Powerful neodymium magnets to capture ferrous particles such as rust that form due to corrosion during the normal operation of a system, metal debris, processing residues, etc.

The magnet assembly is protected by direct contact with water by a removable conduit that makes filter cleaning operations easier.

Sudden section increase

it causes the fluid to slow down.
Average incoming speed: 2.5 m/s
Average speed after the filter inlet: 0.2 m/s
The settling of particles due to the effect of gravity is favoured.

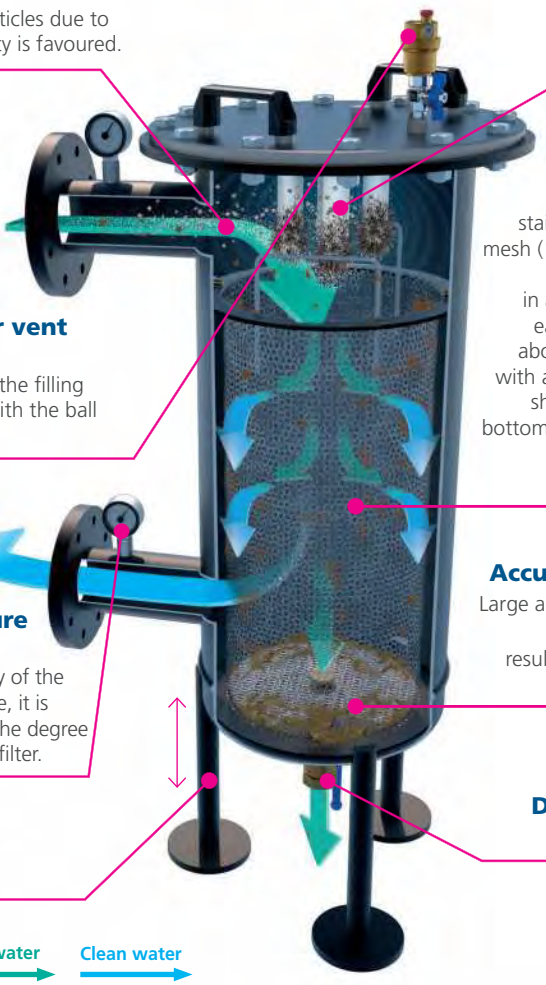

Filtering mesh

stainless steel stretched mesh (100 micron filtration degree) contained in a basket that can be easily pulled out from above. This is equipped with an automatic closing shutter, located at the bottom, to prevent leakage of impurities during maintenance.

Automatic air vent valve

to eliminate air at the filling stage, complete with the ball shut-off valve.

Accumulation zone

Large and very far from the flow passage, resulting in less frequent maintenance work.

Pair of pressure gauges

through the display of the differential pressure, it is possible to assess the degree of clogging of the filter.

Drain ball valve

Size 1" 1/4.

Base

adjustable height.

LEGEND: Dirty water Clean water

NT1™

ACID CONDENSATION NEUTRALISING FILTER FOR CONDENSING BOILERS

RBM Brass

PROTECTS YOUR DISCHARGE SYSTEM AGAINST CORROSION BY NEUTRALISING THE PH OF CONDENSATION



The installation of condensing boilers is spreading rapidly thanks to new regulatory requirements. However, these heat generators produce acid condensation which must be neutralised before disposal so that it cannot cause damage to the system piping and to the environment. By installing **NT1** downstream of the boiler, condensation passes inside the neutralising cartridge which neutralises the pH causing to fall within the limits provided, to allow free draining without damaging pipes, sinks or gutters.

From acid pH to alkaline pH thanks to a heart made of calcium carbonate granules.

Hose connection fittings

They allow quick and easy assembly.

Atmospheric vent cap

As required by the UNI 7129-05 standard. When removed, allows refilling of the neutralising medium.

Transparent body

Thanks to the transparent plastic body, the neutralizing medium level can be constantly monitored.



Neutralising medium

Contained in a stainless steel mesh,the neutralising medium has an operating time that varies according to the acidity, the amount of condensation to process and hours of operation of the boiler. Therefore, it must be refilled periodically and replaced in full every year.



Closure cap

It facilitates cleaning operations of the stainless steel mesh.

PH ALWAYS UNDER CONTROL



NT1 allows the pH of the water discharged to be always maintained within an optimal range, even if the condensation liquid should remain in the filter for a long time (for example, in the case of switch-off due to inactivity, during the night, etc.).

Install NT1 always in a vertical position

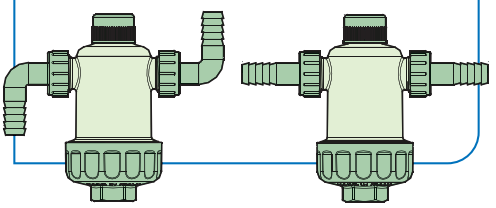

- Fights corrosion by acid condensation
- Resistant to chemicals dissolved in the steam which condenses in the boiler
- Quick & easy maintenance

3286



NT1
Acid condensation neutralising filter.

Transparent PA polyamide cartridge body.
PA polyamide caps and hose connection fittings.
Polymer fastening collar.
AISI 304 stainless steel neutralising mesh door.
Elastomer hydraulic seals.
Neutralising load of calcium carbonate (CaCO3).

Kit inclusive of:
- Acid condensation neutralising filter;
- Fastening collar;
- Pair of elbow hose connection fittings;
- 2 neutralising loads of calcium carbonate (CaCO3).

Acid condensation neutraliser filter
Filtre neutralisateur de condensat acide
Фильтр для нейтрализации кислотного конденсата
Filtru de neutralizare a condensului acid
Filtro neutralizador de la condensación ácida
Neutralisierender Filter für saures Kondensat

Code	Size A	Size B	Pack	Carton
3286.05.00	G 3/4"	DN 20	1	6

Technical drawing on page 205

Warnings: RBM recommends replacing the residual load annually, at the end or beginning of the season, after the filter has been cleaned.
Use RBM original parts exclusively (code 3290.00.00).

026

3287



Pair of straight hose connection fittings complete with flat seat seal.

PA polyamide fittings.

Pair of straight hose connection fittings
Paire de raccords porte-caoutchouc droits
Пара прямых штуцеров для шлангов
Pereche de racorduri drepte la suportul pentru cauciuc
Par de racores porta-goma rectos
Paar gerade Anschlüsse mit Gummihalterung

Code	Size A	Size B	Pack	Carton
3287.05.16	3/4"	DN 16	6	60
3287.05.20	3/4"	DN 20	6	60

041

3288



Pair of elbow hose connection fittings complete with flat seat seal.

PA polyamide fittings.

Pair of elbow hose connection fittings
Paire de raccords porte-caoutchouc coudés
Пара угловых штуцеров для шлангов
Pereche de racorduri cu cot la suportul pentru cauciuc
Par de racores codo porta-goma
Paar Winkelanschlüsse mit Gummihalterung

Code	Size A	Size B	Pack	Carton
3288.05.16	3/4"	DN 16	6	60
3288.05.20	3/4"	DN 20	6	60

041

3289



Thermal insulation made up from expanded polyethylene half-bearings with external antiscratch coating.

Half-bearings fixed with velcro already applied.

- Fire behaviour class1
- Density 33 kg/m^3
- Max operating temperature -40 ÷ +90 °C

NT1 filter thermal shell
Coque thermique filtre NT1
Тепловой кожух фильтра NT1
Înveliș termic filtru NT1
Caperuza térmica del filtro NT1
Thermoschale Filter NT1

Code	Size	Pack	Carton
3289.00.00	3/4"	1	5

Required with the installation of NT1 on outdoor boilers, with condensation discharge into the eaves.

041

3290



Neutralising load of calcium carbonate (CaCO3).

Neutralising load of calcium carbonate
Charge neutralisante de carbonate de calcium
Нейтрализующая заправка карбоната кальция
Sarcină neutralizantă cu carbonat de calciu
Carga base neutralizante de carbonato de calcio
Neutralisierende Ladung Calciumcarbonat

Code	Pack	Carton
3290.00.00	10	40

041

18



Manual air purge and venting valve.

Nickel brass body.
Heat resistant control knob.
Threaded connection M UNI-EN-ISO 228 with pre-gasket ring in PTFE.

- Max operating pressure 10 Bar
- Max operating temperature 90 °C

Technical drawing on page 205

Manual air venting valve
Petit purgeur d'air manuel
Ручной воздухотводчик
Supapă manuală de refulare a aerului
Purgador manual de aire, orientable
Handventil Luftabzug

Code	Size	Pack
18.01.00	1/8"	11
18.02.00	1/4"	12
18.03.00	3/8"	13
18.04.00	1/2"	14

019

3609



KILMA TREE CLEAN
"Kilma Tree Clean" additive.

Cleaner - Inhibitor - Passivator.

Recommended dose: A 1 kg package can process 100 litres of water.
Ecological: tannin-based;
Passivator: adheres to the sides of the surfaces to be treated, creating a thin protective film that prevents the corrosion reaction;
Anti-corrosion inhibitor;
Restorer: removes impurities and sludge. Contributes to reducing bacterial proliferation in heating systems;
Prevents noise in the boiler, the formation of hydrogen, corrosion and limescale deposits;
Effective on all metals and compatible with any kind of plastic and rubber commonly used in heating systems;
Guarantees maximum efficiency of the system;
neutral pH: ensures safe use of the product.

Cleaner - Inhibitor - Passivator
Nettoyeur - Inhibiteur - Passivant
Очиститель - Ингибитор - Пастеризатор
Produs de curățare - Inhibitor - Pasivant
Limpiador - Inhibidor - Pasivante
Reiniger - Inhibitor - Passivierungsmittel

Code	Weight (kg)	Pack	Carton
3609.00.02	1	1	15

037

2343



Connector for cleaning/washing system.

Accessory to be fitted on sludge remover filters model "Dirterm UP" series 3491, "SafeCleaner2" series 2319 - 2344 - 2405, "Mag-Nus2" series 3548 and deaerators model "Airterm UP" series 2649, for system washing.

Connector for cleaning/washing system
Connecteur pour nettoyage/lavage de l'installation
Коннектор для очистки/промывки системы
Conector pentru curățarea/spălarea instalației
Conector para limpieza/lavado instalación
Verbindungsstück für Reinigung / Waschen Anlage

Code	Size	Pack	Carton
2343.05.00	U	1	20

U = Universal

026

CONNECTOR TO WASH THE SYSTEMS

RBM provide a connection tool easy to use and makes it easier and quicker to wash a heating system (as required by law).

The RBM connector to wash systems is compatible with all components fitted with an adjustable diverter: SafeCleaner2 (2405 - 2344 - 2319 series) and Mag-Nus2 (3548 series) dirt separator filters and Airterm UP (2649 series) deaerators.

Thanks to the RBM connector, there is no need to take down the circulator or look for other points to access the system: simply unscrew the filter or deaerator body, screw the connector to the previously installed diverter and carry out flushing operations.



OPERATING INSTRUCTIONS:*

1

Shut off the device by closing the ball valves and remove the main body of the filter from the diverter.



2

Screw the connector onto the diverter body.

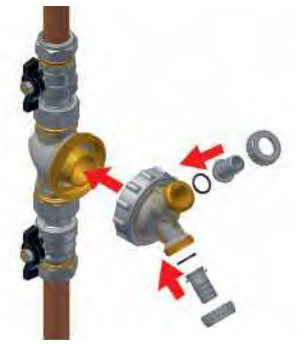

3

Connect the inlet and drain pipes to the two outlet connectors of the connector itself, open the ball valves and carry out the flushing.



4

After washing the system, shut it off, remove the connector and place the main body of the device back on the diverter.



** For further information, please see the product data sheet available at www.rbm.eu.*

- Strong: made entirely of brass
- Quick and easy to install
- With outlet connectors
- Universal: compatible with the whole range of SafeCleaner2 and Mag-Nus2 filters, and Airterm UP deaerators.


RBM
Brass

COMPONENTS FOR DOMESTIC WATER SYSTEMS

COMPOSANTS POUR INSTALLATIONS HYDRO-SANITAIRES

КОМПОНЕНТЫ ДЛЯ САНТЕХНИЧЕСКОГО ОБОРУДОВАНИЯ

COMPONENTE PENTRU INSTALAȚII DE APĂ DE CONSUM

COMPONENTES PARA INSTALACIONES HÍDRICAS Y SANITARIAS

KOMPONENTEN FÜR SANITÄR- UND HEIZUNGSANLAGEN

Cartridge filters	pag. 88	
Polyphosphate dosers	pag. 92	
Compensated diaphragm pressure reducing valves	pag. 94	
Piston-operated pressure reducing valve	pag. 98	
Magnetic anti-scale device	pag. 102	
Accessories for plumbing, heating and sanitary systems	pag. 103	

3



Line filter with removable filtering cartridge, FF connection. Suitable for water.

Nickel brass body.
Stainless steel AISI 304 stretched mesh filter.
Elastomer seals.
Threaded connections FF UNI-EN-ISO 228.

- Max operating pressure 16 Bar
- Max operating temperature 100 °C
- Filtering grade: 50-100-300-800 µm

Technical drawing on page 205

Replaceable filtering cartridge.
See spare parts pricelist.

Line filter 800 µm ff connection
Filtre de ligne 800 µm raccord ff
Линейный фильтр 800 мкм крепление внутр-внутр резьба
Filtru de linie 800 µm prindere Mamă-Mamă
Filtro de línea 800 µm conexión hh
Leitungsfilter 800 µm Anschluss IG/IG

Code	Size	Kv (m³/h)	Pack	Carton
3.03.00	G 3/8″	2,60	10	40
3.04.00	G 1/2″	3,40	10	40
3.05.00	G 3/4″	5,00	6	24
3.06.00	G 1″	8,70	6	24
3.07.00	G 1″1/4	14,10	4	4
3.08.00	G 1″1/2	26,50	2	2
3.09.00	G 2″	26,50	2	2
3.10.00	G 2″1/2	104,70	1	1
3.11.00	G 3″	108,20	1	1
3.13.00	G 4″	111,80	1	1

Line filter 300 µm ff connection
Filtre de ligne 300 µm raccord ff
Линейный фильтр 300 мкм крепление внутр-внутр резьба
Filtru de linie 300 µm prindere Mamă-Mamă
Filtro de línea 300 µm conexión hh
Leitungsfilter 300 µm Anschluss IG/IG

Code	Size	Kv (m³/h)	Pack	Carton
3.03.10	G 3/8″	2,00	10	40
3.04.10	G 1/2″	3,30	10	40
3.05.10	G 3/4″	4,90	6	24
3.06.10	G 1″	8,40	6	24
3.07.10	G 1″1/4	13,70	4	4
3.08.10	G 1″1/2	24,40	2	2
3.09.10	G 2″	24,40	2	2
3.10.10	G 2″1/2	100,10	1	1
3.11.10	G 3″	101,70	1	1
3.13.10	G 4″	108,00	1	1

Line filter 100 µm ff connection
Filtre de ligne 100 µm raccord ff
Линейный фильтр 100 мкм крепление внутр-внутр резьба
Filtru de linie 100 µm prindere Mamă-Mamă
Filtro de línea 100 µm conexión hh
Leitungsfilter 100 µm Anschluss IG/IG

Code	Size	Kv (m³/h)	Pack	Carton
3.03.70	G 3/8″	2,00	10	40
3.04.70	G 1/2″	3,30	10	100
3.05.70	G 3/4″	4,90	6	24
3.06.70	G 1″	8,20	6	24
3.07.70	G 1″1/4	13,40	4	4
3.08.70	G 1″1/2	23,60	2	2
3.09.70	G 2″	23,60	2	2

Line filter 50 µm ff connection
Filtre de ligne 50 µm raccord ff
Линейный фильтр 50 мкм крепление внутр-внутр резьба
Filtru de linie 50 µm prindere Mamă-Mamă
Filtro de línea 50 µm conexión hh
Leitungsfilter 50 µm Anschluss IG/IG

Code	Size	Kv (m³/h)	Pack	Carton
3.03.20	G 3/8″	1,60	10	40
3.04.20	G 1/2″	1,90	10	40
3.05.20	G 3/4″	3,50	6	24
3.06.20	G 1″	4,30	6	24
3.07.20	G 1″1/4	6,60	4	4
3.08.20	G 1″1/2	11,20	2	2
3.09.20	G 2″	11,20	2	2
3.10.20	G 2″1/2	-	1	1
3.11.20	G 3″	-	1	1
3.13.20	G 4″	-	1	1

4



Line filter with removable filtering cartridge, MF connection. Suitable for water.

Nickel brass body.
Stainless steel AISI 304 stretched mesh filter.
Elastomer seals.
Threaded connections MF UNI-EN-ISO 228.

- Max operating pressure 16 Bar
- Max operating temperature 100 °C
- Filtering grade: 50-100-300-800 µm

Technical drawing on page 205

Replaceable filtering cartridge.
See spare parts pricelist.

Line filter 800 µm mf connection
Filtre de ligne 800 µm raccord mf
Линейный фильтр 800 мкм крепление наружн-внутр резьба
Filtru de linie 800 µm prindere Tată-Mamă
Filtro de línea 800 µm conexión mh
Leitungsfilter 800 µm Anschluss AG/IG

Code	Size	Kv (m³/h)	Pack	Carton
4.04.00	G 1/2″	3,40	10	40
4.05.00	G 3/4″	5,00	6	24
4.06.00	G 1″	8,70	6	24
4.07.00	G 1″1/4	14,10	4	4
4.08.00	G 1″1/2	26,50	2	2
4.09.00	G 2″	26,50	2	2

Line filter 300 µm mf connection
Filtre de ligne 300 µm raccord mf
Линейный фильтр 300 мкм крепление наруж-внутр резьба
Filtru de linie 300 µm prindere Tată-Mamă
Filtro de línea 300 µm conexión mh
Leitungsfilter 300 µm Anschluss AG/IG

Code	Size	Kv (m³/h)	Pack	Carton
4.04.10	G 1/2″	3,30	10	40
4.05.10	G 3/4″	4,90	6	24
4.06.10	G 1″	8,40	6	24
4.07.10	G 1″1/4	13,70	4	4
4.08.10	G 1″1/2	24,40	2	2
4.09.10	G 2″	24,40	2	2

Line filter 100 µm mf connection
Filtre de ligne 100 µm raccord mf
Линейный фильтр 100 мкм крепление наруж-внутр резьба
Filtru de linie 100 µm prindere Tată-Mamă
Filtro de línea 100 µm conexión mh
Leitungsfilter 100 µm Anschluss AG/IG

Code	Size	Kv (m³/h)	Pack	Carton
4.04.70	G 1/2″	3,30	10	40
4.05.70	G 3/4″	4,90	6	24
4.06.70	G 1″	8,20	6	24
4.07.70	G 1″1/4	13,40	4	4
4.08.70	G 1″1/2	23,60	2	2
4.09.70	G 2″	23,60	2	2

Line filter 50 µm mf connection
Filtre de ligne 50 µm raccord mf
Линейный фильтр 50 мкм крепление наружн-внутр резьба
Filtru de linie 50 µm prindere Tată-Mamă
Filtro de línea 50 µm conexión mh
Leitungsfilter 50 µm Anschluss AG/IG

Code	Size	Kv (m³/h)	Pack	Carton
4.04.20	G 1/2″	1,90	10	40
4.05.20	G 3/4″	3,50	6	24
4.06.20	G 1″	4,30	6	24
4.07.20	G 1″1/4	6,60	4	4
4.08.20	G 1″1/2	11,20	2	2
4.09.20	G 2″	11,20	2	2

025

858



Y-shaped purifying filter with removable filtering cartridge. Suitable for water.

Brass body and cap.
Fibre sealing gaskets.
Stainless steel AISI 304 stretched mesh filter.
Elastomer seals.
Threaded connections FF UNI-EN-ISO 228.

- Max operating pressure 16 Bar
- Max operating temperature 100 °C
- Filtering grade: 100-300-800 µm

Technical drawing on page 206

Replaceable filtering cartridge.
See spare parts pricelist.

Y-strainer 800 µm
Filtre purificateur en Y 800 µm
Фильтр механической очистки Y-образный 800 мкм
Filtru depurator de 800 µm
Filtro en "Y", malla extraíble en inox. de 800 µm, H-H
Y-Reinigungsfilter 800 µm

Code	Size	Kv (m³/h)	Pack	Carton
858.04.12	G 1/2"	3,69	20	80
858.05.12	G 3/4"	6,57	12	48
858.06.12	G 1"	9,23	8	32
858.07.12	G 1"1/4	15,60	3	12
858.08.12	G 1"1/2	25,10	2	2
858.09.12	G 2"	38,80	1	1

Y-strainer 300 µm
Filtre purificateur en Y 300 µm
Фильтр механической очистки Y-образный 300 мкм
Filtru depurator în formă de y 300 µm
Filtro en "Y", malla extraíble en inox. de 300 µm, H-H
Y-Reinigungsfilter 300 µm

Code	Size	Kv (m³/h)	Pack	Carton
858.04.02	G 1/2"	3,00	20	80
858.05.02	G 3/4"	6,53	12	48
858.06.02	G 1"	8,79	8	32
858.07.02	G 1"1/4	14,15	3	12
858.08.02	G 1"1/2	23,80	2	2
858.09.02	G 2"	36,20	1	1

Y-strainer 100 µm
Filtre purificateur en Y 100 µm
Фильтр механической очистки Y-образный 100 мкм
Filtru depurator în formă de y 100 µm
Filtro en "Y", malla extraíble en inox. de 100 µm, H-H
Y-Reinigungsfilter 100 µm

Code	Size	Kv (m³/h)	Pack	Carton
858.04.72	G 1/2"	2,57	20	80
858.05.72	G 3/4"	5,74	12	48
858.06.72	G 1"	5,84	8	32
858.07.72	G 1"1/4	10,80	3	12
858.08.72	G 1"1/2	16,80	2	2
858.09.72	G 2"	28,20	1	1

025

SELF-CLEANING FILTER

WITH EXTRACTABLE CARTRIDGE (FILTRATION LEVEL: 100 - 300 - 800 MICRON) COMPLETE WITH PRESSURE GAUGE AND BALL-VALVE WITH HOSE CONNECTION



RBM self-cleaning filter solve system problems caused by particles in suspension pollution. RBM product range is suitable for small, medium and big water systems. The specific structure of the filter allows impurities collect on the bottom of the filter seat making the maintenance easier.
Cartridge can be cleaned opening the discharge ball valve with hose connection and leave the water pass through it.

INSTALLATION

Correct installation of the filter is in **horizontal position, with filter seat pointed to the bottom**. For a correct assembly please be careful to the arrow (representing water flowing direction) on the body of the ball valve.

MAINTENANCE

Passing through the meshes of the cartridge, water get cleaned and the impurities are collected on the bottom of the filter seat (*).
Periodically the filter must be cleaned.

Operation for the replace of the filtering cartridge

- Place the container under the filter.
- Close ball valves 1 and 2.
- Unscrew filter house-cap (in the case of high temperature system, be cautious and use right protections to avoid direct contact with fluid).
- Extract the cartridge and shortly open the ball-valve. Brush it under the water; in the case of damage replace it.
- Put the cleaned cartridge inside the seat.
- Close the cap.
- Open the ball-valves.

Operation for the cleaning of the filtering cartridge

Cartridge can be cleaned opening the discharge with hose connection and leave the water pass through it.

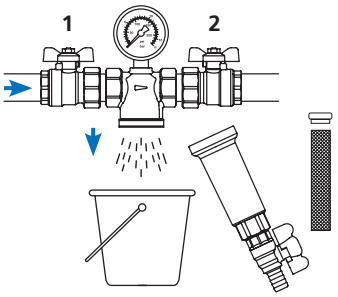

N.B.: During this operation ball valves 1 and 2 must be opened.

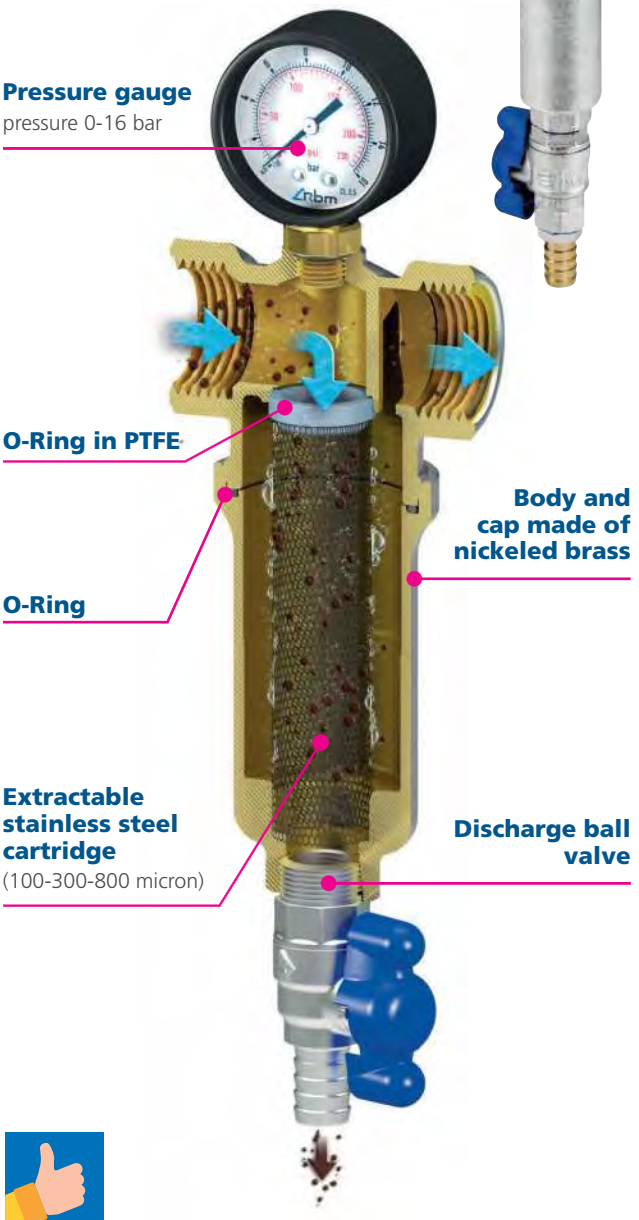

- SELF-CLEANING: Easy and effective clean of the cartridge opening the discharge ball valve
- Resistance to high pressure due to reinforced cartridge (PN 16)

126



Water self-cleaning filter with removable filtering cartridge. Complete with dial pressure gauge and discharge ball cock with hose connection.

Nickel brass body.
Stainless steel AISI 304 stretched mesh filter.
Elastomer seals.
Threaded connections FF UNI-EN-ISO 228.

- Max operating pressure 16 Bar
- Max operating temperature 100 °C
- Pressure gauge scale 0 ÷ 16 bar
- Standard filtering 100 µm

Technical drawing on page 206

Replaceable filtering cartridge.
See spare parts pricelist.

Self-cleaning filter 100 µm
Filtre autonettoyant 100 µm
Самоочищающийся фильтр 100 мкм
Filtru cu autocurățare de 100 µm
Filtro autolimpiante, malla extraíble en inox. de 100 µm, con manómetro y vál. vaciado, H-H
Selbstreinigender Filter 100 µm

Code	Size	Kv (m³/h)	Pack	Carton
126.03.10	G 3/8"	1,80	1	10
126.04.10	G 1/2"	3,10	1	10
126.05.10	G 3/4"	5,80	1	10
126.06.10	G 1"	8,55	1	10
126.07.10	G 1"1/4	14,85	1	1
126.08.10	G 1"1/2	24,40	1	6
126.09.10	G 2"	26,10	1	6
126.10.10	G 2"1/2	107,80	1	1
126.11.10	G 3"	120,20	1	1
126.13.10	G 4"	129,00	1	1

026

3703



Polyphosphate doser.

PP head.
Brass connection.
SAN tank.
Rubber bellows.
Elastomer seals.

- Max operating pressure 6 Bar
- Max. operating temperature +25 °C
- Dosage 2/4 ppm

Protects systems against limescale and corrosion.
Supplied with nr. 1 refill of sodium polyphosphate.

Polyphosphate doser
Doseur de polyphosphates
Дозатор полифосфатов
Dozator de polifosfați
Dosificador de polifosfatos
Polyphosphatdosierer

Code	Size	Pack	Carton
3703.04.02	1/2"	1	6
3703.05.02	3/4"	1	6
3703.06.02	1"	1	6

Polyphosphate doser with bypass
Doseur de polyphosphates avec dérivation
Дозатор полифосфатов с байпасом
Dozator de polifosfați cu by-pass
Dosificador de polifosfatos con bypass
Polyphosphatdosierer mit Nebenleitung

Code	Size	Pack	Carton
3703.04.12	1/2"	1	6

026

3707



Universal sodium polyphosphate refill.

Special refill for RMB polyphosphate doser series 3703.

Universal sodium polyphosphate refill
Recharge universelle de polyphosphate de sodium
Универсальная зарядка полифосфатами натрия
Rezervă universală de polifosfați de sodiu
Recarga universal de polifosfatos de sodio
Universelles Auffüllen mit Natriumpolyphosphat

Code	Size	Pack	Carton
3707.00.02*	1/2"	1	1
3707.00.12**	3/4"	1	1

*set consisting of 6 refills, 65 g ea.
**set consisting of 3 refills, 200 g ea.

026

RINOX

COMPENSATED PRESSURE REDUCING VALVES WITH DOUBLE STAINLESS STEEL SEAT. DIAPHRAGM OPERATED

Compliant with EN 1567 and Approved NF *(size 1/2" and 3/4")*

Conformity ACS



RBM **Rinox** pressure reducing valves are used in plumbing, heating and sanitary systems, especially to reduce pressure between the distribution network and the junctions of the main utility.

The structural features and diaphragm operation make **Rinox** the ideal product to use in circuits in which upstream pressure can be subject to strong oscillations (water hammers).
The compensation chamber in the pressure reducing valve also prevents these fluctuations from affecting the calibration pressure, keeping it stable.

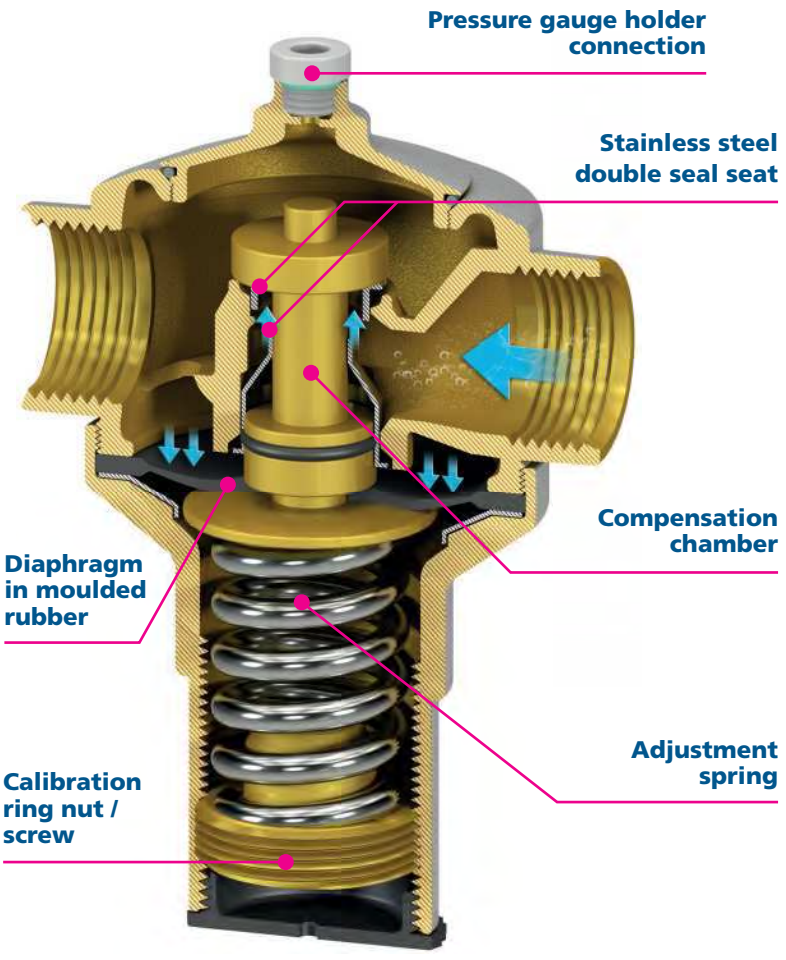

Representative section of the pressure reducing valve in the CLOSED position.

- Moulded diaphragm (enhanced sensitivity - longer duration - greatly reduced friction).
- Stainless steel double seal seat (protects moving parts - guides movement - enhanced adjustment sensitivity - not touched by scales).
- PN 40 bar: ideal for installations in high rising buildings.
- Resistant to high temperatures: max operating temperature 80°C.
- Compensated: pressure variations upstream are compensated, leaving the outlet calibration constant.
- Wide application range.
- Can be installed in any position: vertical, horizontal, diagonal or facing downwards.

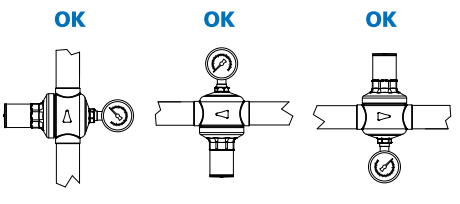

51



Rinox

Adjustable compensated pressure reducing valve, diaphragm operated, double seat, made of stainless steel, with anti-water hammer function. Suitable for water conveyance.

Nickel brass body.
Stainless steel AISI 303.
Elastomer seals.
Threaded connections FF UNI-EN-ISO 228.
Pressure gauge holder connection F 1/4".

- Nominal pressure 40 Bar
- Max upstream pressure 25 Bar
- Max operating temperature 80 °C

First reduction pressure reducing valve with FF connections - pn 40
Réducteur de pression de première réduction avec raccords FF - pn 40
Редуктор давления первого уменьшения с креплениями ВНУТР.-ВНУТР. резьба - pn 40
Reductor de presiune - prima reducere cu prinderi Mamă-Mamă - pn 40
Reductor de presión de primera reducción con conexiones HH - pn 40
Druckminderer für die erste Minderung mit Anschlüssen IG/IG - PN 40

Code	Size	Model	Pack	Carton
51.04.95	G 1/2"	Rinox	1	6
51.05.95	G 3/4"	Rinox	1	6
51.06.95	G 1"	Rinox	1	6
51.07.95	G 1"1/4	Rinox	1	4
51.08.95	G 1"1/2	Rinox	1	1
51.09.95	G 2"	Rinox	1	1

outlet adjustment 6 ÷ 10 Bar

Technical drawing on page 206

First reduction pressure reducing valve: this reduces upstream pressures near a value of 25 bar in compliance with the reduction ratio recommended by RBM.

In order to avoid cavitation phenomena, and therefore excessive noise of the component, it is best to avoid having the ratio between the upstream maximum pressure and the downstream adjustment pressure of the regulator exceed a value of 2.5.

021

51



Rinox

Adjustable compensated pressure reducing valve, diaphragm operated, double seat, made of stainless steel, with anti-water hammer function. Suitable for water conveyance.

Nickel brass body.
Stainless steel AISI 303.
Elastomer seals.
Threaded connections FF UNI-EN-ISO 228.
Pressure gauge holder connection F 1/4".

- Nominal pressure 40 Bar
- Max upstream pressure 25 Bar
- Max upstream pressure in compliance with standard NF 16 Bar
- Max operating temperature 80 °C
- Default presetting 3 Bar (only models with*)

NF certified (1/2" and 3/4" size)

Second reduction pressure reducing valve with FF connections - pn 40
Réducteur de pression de deuxième réduction avec raccords FF - pn 40
Редуктор давления второго уменьшения с креплениями ВНУТР.-ВНУТР. резьба - pn 40
Reductor de presiune - a doua reducere cu prinderi Mamă-Mamă - pn 40
Reductor de presión de segunda reducción con conexiones HH - pn 40
Druckminderer für die zweite Minderung mit Anschlüssen IG/IG - PN 40

Code	Size	Model	Pack	Carton
51.04.70	G 1/2"	Rinox *	1	6
51.05.70	G 3/4"	Rinox *	1	6
51.06.70	G 1"	Rinox *	1	6
51.07.70	G 1"1/4	Rinox **	1	4
51.08.70	G 1"1/2	Rinox **	1	1
51.09.70	G 2"	Rinox **	1	1
51.10.70	G 2"1/2	Rinox **	1	1
51.11.70	G 3"	Rinox **	1	1
51.13.70	G 4"	Rinox **	1	1

** outlet adjustment 0.8 - 5.5 Bar - available outlet adjustment 0.8 - 7 Bar (ordering code 51.0X.80).*
*** outlet adjustment 0.8-7 k Bar.*

Technical drawing on page 206

Pre-calibrated(*) with anti-water hammer function.

021

51



Rinox

Adjustable compensated pressure reducing valve, diaphragm operated, double seat, made of stainless steel, with anti-water hammer function. Suitable for water conveyance.

Nickel brass body.
Stainless steel AISI 303.
Elastomer seals.
PN 16 flanged connections.
Pressure gauge holder connection F 1/4".

- Reducing valve nominal pressure 40 Bar
- Nominal flange pressure 16 Bar
- Max upstream pressure 25 Bar
- Max operating temperature 80 °C

NF certified (1/2" and 3/4" size)

Technical drawing on page 206

Flange suitable for coupling with counter-flange UNI EN 1092-1. Equipped with floating flanges that simplify installation operations.

Pressure reducing valve with flanged connections - pn 16
Réducteur de pression avec raccords à bride - pn 16
Редуктор давления с фланцевым креплением - pn 16
Reductor de presiune cu prinderi cu flanșe - pn 16
Reductor de presión con conexiones embridadas - pn 16
Druckminderer mit geflanschten Anschlüssen - PN 16

Code	Size	Model	Pack	Carton
51.10.10	DN 65	Rinox **	1	1
51.11.10	DN 80	Rinox **	1	1
51.13.10	DN 100	Rinox **	1	1

*** outlet adjustment 0.8-7 Bar*

021

51



Rinox

Adjustable compensated pressure reducing valve, diaphragm operated, double seat, made of stainless steel, with anti-water hammer function. Suitable for water conveyance.

Nickel brass body.
Stainless steel AISI 303.
Elastomer seals.
Threaded connections MM UNI-EN-ISO 228.
Pressure gauge holder connection F 1/4".

- Nominal pressure 40 Bar
- Max upstream pressure 25 Bar
- Max upstream pressure in compliance with standard NF 16 Bar
- Max operating temperature 80 °C
- Default presetting 3 Bar (only models with*)

NF certified (1/2" and 3/4" size)

Technical drawing on page 206

Pre-calibrated(*) with anti-water hammer function.

Pressure reducing valve with MM union connections - pn 40
Réducteur de pression avec raccords écrou libre MM - pn 40
Редуктор давления со штуцерным соединением с НАРУЖН.-НАРУЖН. резьбой - pn 40
Reductor de presiune cu prinderi cu racord Tată-Tată - pn 40
Reductor de presión con conexiones con boca de llenado MM - pn 40
Druckminderer mit Anschlussstutzen AG/AG - PN 40

Code	Size	Model	Pack	Carton
51.04.10	G 1/2"	Rinox *	1	6
51.05.10	G 3/4"	Rinox *	1	6
51.06.10	G 1"	Rinox *	1	6
51.07.10	G 1"1/4	Rinox **	1	4
51.08.10	G 1"1/2	Rinox **	1	1
51.09.10	G 2"	Rinox **	1	1

** outlet adjustment 0.8-5.5 Bar.*
*** outlet adjustment 0.8-7 k Bar.*

021

2909



RinoxPlusSmart M

Adjustable pressure reducing valve, diaphragm operated, with measuring knob.

The internal cartridge can be easily inspected and extracted; provided with extractable filter.

Suitable for water channeling.

Anti-dezincification brass body (CR).
Elastomer seals.
Threaded connections MM UNI-EN-ISO 228.
Pressure gauge holder connection F 1/4".

- Nominal pressure 25 bar (cold water 40 °C) / 16 bar (hot water 80 °C) *
- Upstream pressure 25 bar (cold water 40 °C) / 16 bar (hot water 80 °C)
- Adjustable downstream pressure 0.8 ÷ 7 Bar
- Max operating temperature 80 °C
- Filtering grade 800 µm
- Default presetting 3 Bar

kiwa IT-TD-Ki0413 UNI ACS WRAS APPROVED PRODUCT

Pressure reducing valve with embedded filter and calibrating knob - pn 25* - 800 µm
Réducteur de pression avec filtre incorporé et manette d'étalonnage - pn 25 - 800 µm*
Редуктор давления со встроенным фильтром и калибровочной рукояткой - pn 25 - 800 мкм*
Reductor de presiune cu filtru încorporat și buton rotativ de calibrare - pn 25 - 800 µm*
Reductores de presión con filtro incorporado y manivela de calibración - pn 25 - 800 µm*
Druckminderer mit eingebautem Filter und Drehknopf zur Kalibrierung - PN 25 - 800 µm*

Code	Size	Model	Pack	Carton
2909.04.00	G 1/2"	RinoxPlusSmart M	1	6
2909.05.00	G 3/4"	RinoxPlusSmart M	1	6
2909.06.00	G 1"	RinoxPlusSmart M	1	6
2909.07.00	G 1"1/4	RinoxPlusSmart M	1	4
2909.08.00	G 1"1/2	RinoxPlusSmart M	1	4
2909.09.00	G 2"	RinoxPlusSmart M	1	4

Technical drawing on page 207

Pre-calibrated.
Replaceable cartridge. See spare parts pricelist.
Compact.
Complete with calibration knob.

021

2848



RinoxPlus M

Adjustable pressure reducing valve, diaphragm operated. The internal cartridge can be easily inspected and extracted; provided with extractable filter. Suitable for water channeling.

Anti-dezincification brass body (CR).
Elastomer seals.
Threaded connections FF UNI-EN-ISO 228.
Pressure gauge holder connection F 1/4".

- Nominal pressure 25 bar (cold water 40 °C) / 16 bar (hot water 80 °C) *
- Upstream pressure 25 bar (cold water 40 °C) / 16 bar (hot water 80 °C)
- Adjustable downstream pressure 0.8 ÷ 7 Bar
- Max operating temperature 80 °C
- Filtering grade 800 µm
- Default presetting 3 Bar

kiwa IT-TD-Ki0413 UNI ACS WRAS APPROVED PRODUCT

Pressure reducing valve with embedded filter pn 25* - 800 µm
Réducteur de pression avec filtre incorporé pn 25 - 800 µm*
Редуктор давления со встроенным фильтром pn 25 - 800 мкм*
Reductor de presiune cu filtru încorporat pn 25 - 800 µm*
Reductor de presión con filtro incorporado pn 25 - 800 µm*
Druckminderer mit eingebautem Filter PN 25 -800 µm*

Code	Size	Model	Pack	Carton
2848.04.00	G 1/2"	RinoxPlus M	1	10
2848.05.00	G 3/4"	RinoxPlus M	1	10
2848.06.00	G 1"	RinoxPlus M	1	4
2848.07.00	G 1"1/4	RinoxPlus M	1	4
2848.08.00	G 1"1/2	RinoxPlus M	1	4
2848.09.00	G 2"	RinoxPlus M	1	4

Technical drawing on page 207

Pre-calibrated.
Replaceable cartridge. See spare parts pricelist.
Compact.

021

RinoxPlus M & RinoxPlusSmart M

DIAPHRAGM PRESSURE REDUCING VALVES WITH INSPECTIONABLE INTERNAL CARTRIDGE AND REMOVABLE FILTER.

The **RBM RinoxPlus M** are diaphragm operated pressure reducing valves with inspectionable and easily interchangeable internal cartridge, complete with removable filter.

The cartridge is a compensated seat: upstream pressure variations do not affect the adjustment of the downstream pressure.

In addition, the **RinoxPlusSmart M** pressure reducing valve is equipped with a graduated knob to carry out the calibration, without the use of a pressure gauge and tools.



RinoxPlus M



RinoxPlusSmart M

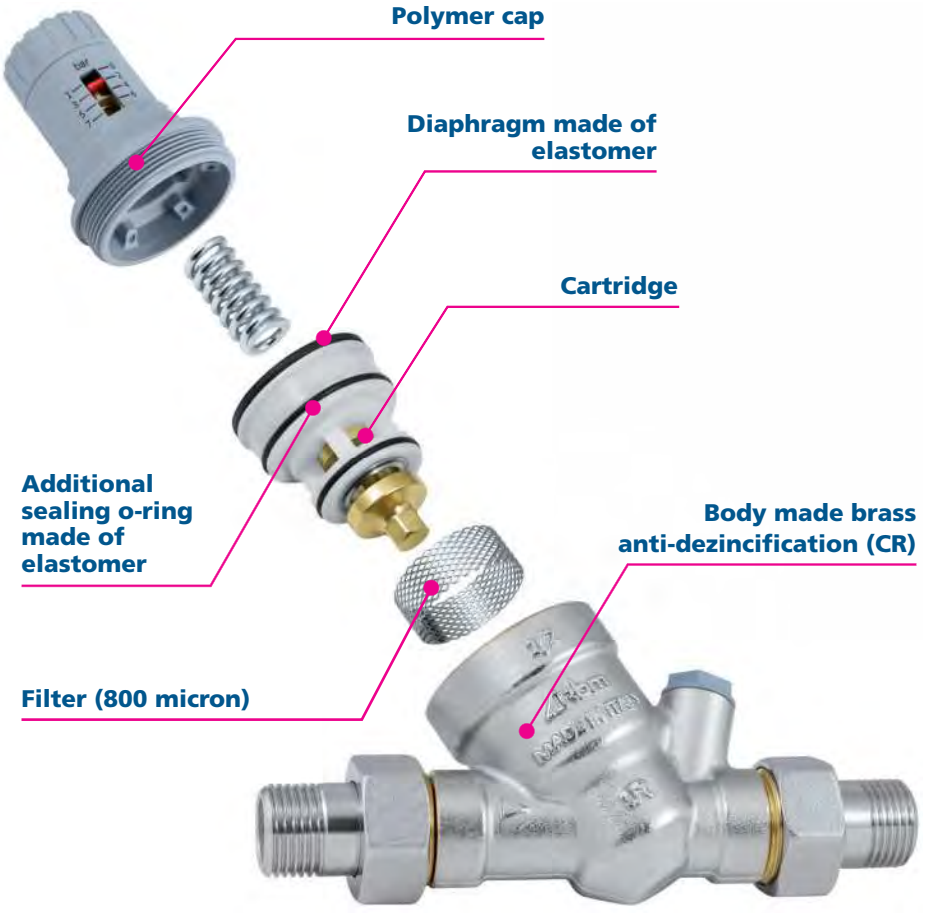

SPARE PARTS AND MAINTENANCE INTERVENTIONS

Before carrying out any maintenance operation, shut off the pressure reducing valve.

For the replacement, control and cleaning of the reducer, simply unscrew the cap and remove the internal cartridge, which contains all the mobile parts and consumables.
When replacing the cartridge the reducer goes back to being like new.

It is possible to remove the filter from the cartridge to carry out cleaning or replacement.

During these operations, the body remains installed on the system.



- Diaphragm pressure reducing valve
- Inspectionable internal cartridge and filter
- Body made of brass anti-dezincification (CR)
- Out pressure calibration knob
- Cartridge compensated

87



Adjustable pressure reducing valve, with single stainless steel seat and compensated piston operation. Suitable for water conveyance.

Nickel brass body.
Stainless steel AISI 303 seat seals.
Elastomer seals.
Threaded connections FF UNI-EN-ISO 228.
F1/4" pressure gauge holder connection.

- Nominal pressure 25 Bar
- Max upstream pressure 25 Bar
- Adjustable downstream pressure 0.5 ÷ 4 Bar (with inlet pressure of 8 Bar)
- Max operating temperature 80 °C
- Default presetting 3 Bar

RinoxDue. Pressure reducing valve with FF connections - pn 25
RinoxDue. Réducteur de pression avec raccords FF - pn 25
RinoxDue. Редуктор давления с креплениями ВНУТР.-ВНУТР. резьба - pn 25
RinoxDue. Reductor de presiune cu prinderi Mamă-Mamă - pn 25
RinoxDue. Reductor de presión con conexiones HH - pn 25
RinoxDue. Druckminderer mit Anschlüssen IG/IG - PN 25

Code	Size	Model	Pack	Carton
87.03.80	G 3/8"	RinoxDue	1	20
87.04.80	G 1/2"	RinoxDue	1	20
87.05.80	G 3/4"	RinoxDue	1	20

RinoxDue Silver. Pressure reducing valve with FF - pn 25 with TEA® treatment
RinoxDue Silver. Réducteur de pression avec raccords FF - pn 25 avec traitement TEA®
RinoxDue Silver. Редуктор давления с креплениями с ВНУТР.-ВНУТР. резьбой - pn 25 с отделкой TEA®®
RinoxDue Silver. Reductor de presiune cu prinderi Mamă-Mamă - pn 25 cu tratament TEA®
RinoxDue Silver. Reductor de presión con conexiones HH - pn 25 con tratamiento TEA®
RinoxDue Silver. Druckminderer mit Anschlüssen IG/IG - PN 25 mit TEA®-Behandlung

Code	Size	Model	Pack	Carton
87.03.10	G 3/8"	RinoxDue Silver	1	20
87.04.10	G 1/2"	RinoxDue Silver	1	20
87.05.10	G 3/4"	RinoxDue Silver	1	20

Technical drawing on page 207

Pre-calibrated.
TEA® treatment Definition: electro-deposited alloy, very stable; it replaces the classical electrolytic nickel-chromium. It complies with the limitations imposed by the international regulations in terms of water water intended for human consumption.
Features: Great corrosion resistance, both in acidic and alkaline environments and anti-magnetic properties that ensure great dezincification resistance.
It slows down the production of Limestone.
It complies with potability prerequisites.

021

87



Adjustable pressure reducing valve, with single stainless steel seat and compensated piston operation. Suitable for water conveyance.

Nickel brass body.
Stainless steel AISI 303 seat seals.
Elastomer seals.
Threaded connections FF UNI-EN-ISO 228.
F1/4" pressure gauge holder connection.

- Nominal pressure 25 Bar
- Max upstream pressure 25 Bar
- Adjustable downstream pressure 0.5 ÷ 7 Bar (with inlet pressure of 8 Bar)
- Max operating temperature 80 °C

RinoxDue. Pressure reducing valve with FF connections - pn 25
RinoxDue. Réducteur de pression avec raccords FF - pn 25
RinoxDue. Редуктор давления с креплениями ВНУТР.-ВНУТР. резьба - pn 25
RinoxDue. Reductor de presiune cu prinderi Mamă-Mamă - pn 25
RinoxDue. Reductor de presión con conexiones HH - pn 25
RinoxDue. Druckminderer mit Anschlüssen IG/IG - PN 25

Code	Size	Model	Pack	Carton
87.03.70	G 3/8"	RinoxDue	1	20
87.04.70	G 1/2"	RinoxDue	1	20
87.05.70	G 3/4"	RinoxDue	1	20
87.06.70	G 1"	RinoxDue	1	6
87.07.70	G 1"1/4	RinoxDue	1	6
87.08.70	G 1"1/2	RinoxDue	1	1
87.09.70	G 2"	RinoxDue	1	1

RinoxDue Silver. Pressure reducing valve with FF - pn 25 with TEA® treatment
RinoxDue Silver. Réducteur de pression avec raccords FF - pn 25 avec traitement TEA®
RinoxDue Silver. Редуктор давления с креплениями с ВНУТР.-ВНУТР. резьбой - pn 25 с отделкой TEA®®
RinoxDue Silver. Reductor de presiune cu prinderi Mamă-Mamă - pn 25 cu tratament TEA®
RinoxDue Silver. Reductor de presión con conexiones HH - pn 25 con tratamiento TEA®
RinoxDue Silver. Druckminderer mit Anschlüssen IG/IG - PN 25 mit TEA®-Behandlung

Code	Size	Model	Pack	Carton
87.04.60	G 1/2"	RinoxDue Silver	1	20
87.05.60	G 3/4"	RinoxDue Silver	1	20
87.06.60	G 1"	RinoxDue Silver	1	6
87.07.60	G 1"1/4	RinoxDue Silver	1	6
87.08.60	G 1"1/2	RinoxDue Silver	1	1
87.09.60	G 2"	RinoxDue Silver	1	1

Technical drawing on page 207

021

288



RinoxDue
Adjustable pressure reducing valve, with single stainless steel seat and compensated piston operation. Suitable for water conveyance.

Nickel brass body.
Stainless steel AISI 303 seat seals.
Elastomer seals.
Threaded connections MF UNI-EN-ISO 228.
F1/4" pressure gauge holder connection.

- Nominal pressure 25 Bar
- Max upstream pressure 25 Bar
- Adjustable downstream pressure 0.5 ÷ 4 Bar (with inlet pressure of 8 Bar)
- Max operating temperature 80 °C
- Default presetting 3 Bar

Pressure reducing valve with MM connections - pn 25
Réducteur de pression avec raccords MM - pn 25
Редуктор давления с креплениями НАРУЖН.-НАРУЖН. резьбой - pn 25
Reductor de presiune cu prinderi cu Tată-Tată - pn 25
Reductor de presión con conexiones MM - pn 25
Druckminderer mit Anschlüssen AG/AG - PN 25

Code	Size	Model	Pack	Carton
288.04.80	G 1/2"	RinoxDue	1	10
288.05.80	G 3/4"	RinoxDue	1	10

Technical drawing on page 208

Pre-calibrated.

021

1139



Ris

Adjustable pressure reducing valve, single seat, compensated piston operation. Suitable for water conveyance.

Nickel brass body.
Elastomer seals.
Threaded connections FF UNI-EN-ISO 228.
F1/4" pressure gauge holder connection.

- Nominal pressure 16 Bar
- Max upstream pressure 16 Bar
- Adjustable downstream pressure 0.5 ÷ 4 Bar (with inlet pressure of 8 Bar)
- Max operating temperature 80 °C
- Default presetting 3 Bar

Compact pressure reducing valve with FF connections with pressure gauge holder connection- pn 16
Réducteur de pression avec raccords FF avec raccord porte-manomètre- pn 16
Компактный редуктор давления с креплениями с ВНУТР.-ВНУТР. резьбой с креплением держателя манометра - pn 16
Reductor de presiune compact cu prinderi Mamă-Mamă cu racord pentru manometru - pn 16
Reductor de presión compacto con conexiones HH con conexión portamanómetro - pn 16
Kompakter Druckminderer mit Anschlüssen IG/IG mit Manometerhalteranschluss - PN 16

Code	Size	Model	Pack	Carton
1139.03.00	G 3/8"	Ris	1	30
1139.04.00	G 1/2"	Ris	1	30
1139.05.00	G 3/4"	Ris	1	20

Technical drawing on page 208

Pre-calibrated.
Compact.

021

1139



Ris

Adjustable pressure reducing valve, single seat, compensated piston operation. Suitable for water conveyance.

Nickel brass body.
Elastomer seals.
Threaded connections FF UNI-EN-ISO 228.

- Nominal pressure 16 Bar
- Max upstream pressure 16 Bar
- Adjustable downstream pressure 0.5 ÷ 4 Bar (with inlet pressure of 8 Bar)
- Max operating temperature 80 °C
- Default presetting 3 Bar

Compact pressure reducing valve with FF connections
Réducteur de pression compact avec raccords FF
Компактный редуктор давления с креплениями ВНУТР.-ВНУТР. (FF)
Reductor de presiune cu prinderi Mamă-Mamă
Reductor de presión compacto con conexiones HH
Kompakter Druckminderer mit Anschlüssen IG/IG

Code	Size	Model	Pack	Carton
1139.03.40	G 3/8"	Ris	1	30
1139.04.40	G 1/2"	Ris	1	30
1139.05.40	G 3/4"	Ris	1	30

Pre-calibrated.
Compact.
Version without pressure gauge holder connection.

021

1139



Ris

Pressure reducing valve with fixed calibration, single seat, compensated piston-operated. Suitable for water conveyance.

Brass body.
Elastomer seals.
Threaded connections FF UNI-EN-ISO 228.

- Nominal pressure 16 Bar
- Max upstream pressure 16 Bar
- Fixed downstream pressure 3 bar
- Max operating temperature 80 °C
- Fixed calibration 3 Bar

Pressure reducing valve with fixed calibration
Réducteur de pression à étalonnage fixe
Редуктор давления с фиксированной настройкой
Reductor de presiune cu calibrare fixă
Reductor de presión con calibración fija
Druckminderer mit fester Kalibrierung

Code	Size	Model	Pack	Carton
1139.03.90	G 3/8"	Ris	1	30
1139.04.90	G 1/2"	Ris	1	30
1139.05.90	G 3/4"	Ris	1	30

Compact.
Version without pressure gauge holder connection.

021

MAGNETIC ANTI-SCALE DEVICE

RBM Brass



Water that flows...
...Without leaving a trace



The only effective system to stop limescale and to avoid its formation. Thanks to a simple magnetisation treatment that does not alterate water potability and does not reduce or modify the presence of alkaline elements, **RBM Magnetic anti-scale device** avoids limescale formation "stopping" it while water flows.

304



Magnetic anti-scale device for physical treatment of water. Permanent annular magnets encapsulated in food-grade plastic polymer.

External nickel plated brass body.
Sintered ring magnet.
Elastomer seals.
Union threaded connections MM UNI-EN-ISO 228 up to 2".
2"1/2 threaded connections (UNI-EN-ISO 228).

- Magnetic field 700 GAUS
- Residual induction from 2300 to 3700 GAUS
- Max operating pressure 16 Bar
- Max operating temperature 80 °C

Magnetic anti-scale device
Anticalcaire magnétique
Магнитный нейтрализатор
Anticalcar magnetic
Anticalcáreo magnético
Magnetischer Verkalkungsschutz

Code	Size	Kv (m³/h)	Pack	Carton
304.04.00	G 1/2"	10,20	1	6
304.05.00	G 3/4"	14,80	1	6
304.06.00	G 1"	26,00	1	6
304.07.00	G 1"1/4	30,40	1	1
304.08.00	G 1"1/2	63,00	1	1
304.09.00	G 2"	74,00	1	1
304.10.00	G 2"1/2	125,00	1	1
304.11.00	G 3"	160,00	1	1
304.13.00	G 4"	252,00	1	1

Technical drawing on page 208

022

304



Test kit to control water hardness.

Easy-to-use supplied with case.

Water hardness control test kit
Kit test de contrôle de dureté de l'eau
Набор для анализа жесткости воды
Kit test control al durității apei
Kit test control de dureza del agua
Bausatz Wasserhärtetest

Code	Pack	Carton
304.00.02	1	1

022

3072



Water hammer damper.

Brass body.
Steel spring.
Polymer piston.
Elastomer seals.
Threaded connection M UNI-EN-ISO 228.

- Max operating pressure 10 Bar
- Max operating temperature 90 °C
- Start of active intervention 3 Bar

Water hammer damper
Amortisseur de coup de bélier
Компенсатор гидроудара
Amortizor pentru lovituri de berbec
Amortiguador golpe de ariete
Stoßdämpfer mit Wirkung gegen Druckstöße

Code	Size	Pack	Carton
3072.04.00	1/2"	1	20

021

2133



T-shaped adjustable thermostatic mixer for sanitary systems.

Chrome-plated body in anti-dezincification alloy (size 1/2" and 3/4").
Chrome-plated brass body (size 1" - 1"1/4 - 1"1/2 - 2").
Stainless steel springs.
Elastomer seals.
Threaded connections UNI-EN-ISO 228.

- Max dynamic pressure 5 Bar
- Max static pressure 10 Bar
- Max inlet temperature 85 °C
- Setting range +30 - +65 °C
- Precision ± 2 °C

T-shaped adjustable thermostatic mixer for sanitary systems
Mélangeur thermostatique en forme de T réglage pour installations sanitaires
Термостатический смеситель Т-образной формы, регулируемый, для санитарно-технического оборудования
Vană de amestec termostatică sub formă de T reglabilă pentru instalații sanitare
Mezclador termostático en forma de T regulable para instalaciones sanitarias
Einstellbarer Thermostatmischer in T-Form für sanitäre Anlagen

Code	Size A	Pack	Carton
2133.04.00	1/2"	1	10
2133.05.00	3/4"	1	10
2133.06.00	1"	1	10
2133.07.00	1"1/4	1	8
2133.08.00	1"1/2	1	-
2133.09.00	2"	1	-

Non-removable cartridge.

022

120



Threaded flange suited for connecting threaded reducers, filters and ball valves to flange distribution networks.

Nickel brass body.
Threaded connection M UNI-EN-ISO 228.
Flanged connection suited for coupling with counter flange UNI EN 1092-1.

- Max operating temperature 150 °C

Threaded flange - pn 16
Bride filetée - pn 16
Резьбовой фланец - PN 16
Flanșă filetată - pn 16
Brida roscada - pn 16
Gewindeflansch - pn 16

Code	Size A	Size B	Pack	Carton
120.09.00	2"	DN 50	2	2
120.10.00	2"1/2	DN 65	1	1
120.11.00	3"	DN 80	1	1
120.13.00	4"	DN 100	1	1

Flange suitable for coupling with counter-flange UNI EN 1092-1.
Floating flange

022

1213



Radial pressure gauge.

Pressure gauge for pressure reducing valves and self-cleaning filters.

Radial pressure gauge
Manomètre radial
Радиальный манометр
Manometru radial
Manómetro Ø 50mm conexión radial
Manometer mit Radialanschluss

Code	Size	Scale (bar)	Pack	Carton
121.30.05	1/4" Ø 50	0 ÷ 16	1	280

056


RBM
Brass

TERMINAL ELEMENT VALVES

VANNES POUR ÉLÉMENTS TERMINAUX
КЛАПОНЫ ДЛЯ КОНЦЕВЫХ ЭЛЕМЕНТОВ
ROBINEȚI PENTRU ELEMENTE TERMINALE
VÁLVULAS PARA ELEMENTOS TERMINALES
VENTILE FÜR ENDSTÜCKE

Valves with thermostatic option	pag. 108	
Valves with thermostatic option with presetting	pag. 116	
Thermostatically controlled pressure independent valves with pre-adjustment	pag. 120	
Controls for valves with thermostatic option	pag. 121	
Accessories for thermostatic heads	pag. 123	
Manual single adjustment valves	pag. 124	
Regulating lockshields	pag. 126	
Manual valves with double seal O-ring and jet-line series lockshield valves	pag. 128	
Valves for single and dual pipe systems	pag. 132	
Radiator valves kit	pag. 136	
Accessories for valves	pag. 140	
Valves for radiant plates	pag. 143	

RBM THERMOSTATIC VALVE WITH LOW THERMAL INERTIA



The RBM thermostatic valves and the thermostatic heads are certified in accordance with **European Standard UNI EN 215 (ED. 2007) "Thermostatic valves for radiators. Requirements and test methods".**

The Standard conformity certifications are guaranteed by the certificates granting use of trademark no. 43, issued by the certifying body.



PRODUCT CERTIFICATION

028

LICENSEE

R.B.M. S.p.A.

Via Industriale, 23
25060 S. Giovanni di Polaveno (BS)
Italia

LICENSEE IDENTITY NUMBER: 43

PRODUCT: Thermostatic Radiator Valve

LICENSE NUMBER: 07-RBM-TRV-A

REFERENCE DOCUMENTS:

- UNI EN 215: Thermostatic radiator valves. Requirements and test methods
- CEN Keymark scheme rules for thermostatic radiator valves
- CEN/CENELEC Internal regulation - Part 4: Certification

FIRST ISSUE: 30/06/2016

CURRENT ISSUE: 30/06/2016

EXPIRING DATE: 29/06/2020

LICENSE VALIDITY:

The right of use of the KEYMARK is conditioned by the respect of the reference documents. SIET regularly tests the products and verifies the Quality System implemented by the Licensee in order to assure the respect of the reference documents. The suspended or withdrawn certificates are available on SIET web site www.siet.it

TECHNICAL INFORMATION:

The Technical Information of the certified Thermostatic Radiator Valves (qn, kN, qm, sh, C_v, D_n, W_e, and Z_v) declared by the Licensee are available at page Product Certification on SIET web site www.siet.it

HEAD	TYPE
3087 (TL10W)	Liquid integral sensor

VALVE	FORM	NOMINAL SIZE	SERIES
31.03	Angle	DN10	(*)
31.04	Angle	DN15	(*)
32.03	Straight	DN10	(*)
32.04	Straight	DN15	(*)
48.03	Angle	DN10 (*)	(*)
48.04	Angle	DN15 (*)	(*)
49.03	Straight	DN10 (*)	(*)
49.04	Straight	DN15 (*)	(*)
2494.03	Angle	DN10	(*)
2494.04	Angle	DN15	(*)
2495.03	Straight	DN10	(*)
2495.04	Straight	DN15	(*)
2496.03	Angle	DN10 (*)	(*)
2496.04	Angle	DN15 (*)	(*)
2497.03	Straight	DN10 (*)	(*)
2497.04	Straight	DN15 (*)	(*)
2640.03	Angle	DN10	(*)
2640.04	Angle	DN15	(*)
2641.03	Straight	DN10	(*)
2641.04	Straight	DN15	(*)
2642.03	Angle	DN10 (*)	(*)
2642.04	Angle	DN15 (*)	(*)
2643.03	Straight	DN10 (*)	(*)
2643.04	Straight	DN15 (*)	(*)

(*) Copper tube fitting
(**) Dimensions and details on connection are not in accordance with the specific Series in Annex A of UNI EN 215

IAF ACCREDIA

CHIEF EXECUTIVE OFFICER
Alfredo Luce

SIET

SIET S.p.A. via Nino Bixio, 27/c - 29121 Piacenza - Italia
Tel. +39 0523 329011 - Fax +39 0523 329010
siet@siet.it www.siet.it

The valves' certification in accordance with Standard UNI EN 215, is the RBM thermostatic valve and head combination.

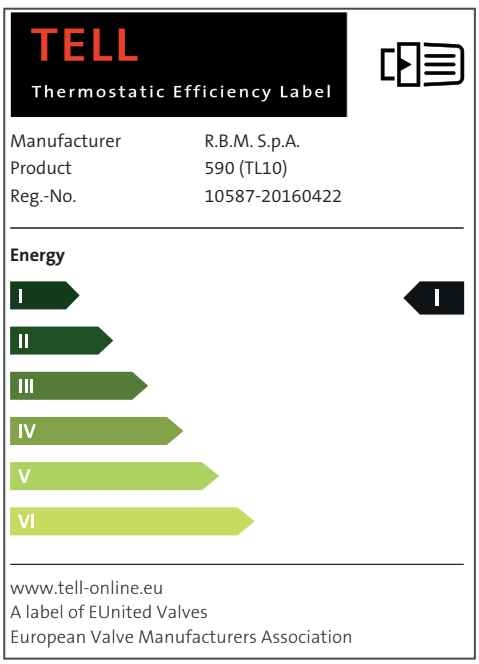

TELL

Thermostatic Efficiency Label

Manufacturer	R.B.M. S.p.A.
Product	590 (TL10)
Reg.-No.	10587-20160422

Energy

I
II
III
IV
V
VI

I

www.tell-online.eu
A label of EUnited Valves
European Valve Manufacturers Association

Termostatic Valve RBM High Energy Efficiency: Class I approved!

THERMOSTATIC VALVE:

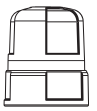

Possibility of maintenance service while system is in operation.

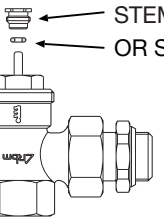

Liquid expansion thermostatic sensor
Higher Sensitivity.

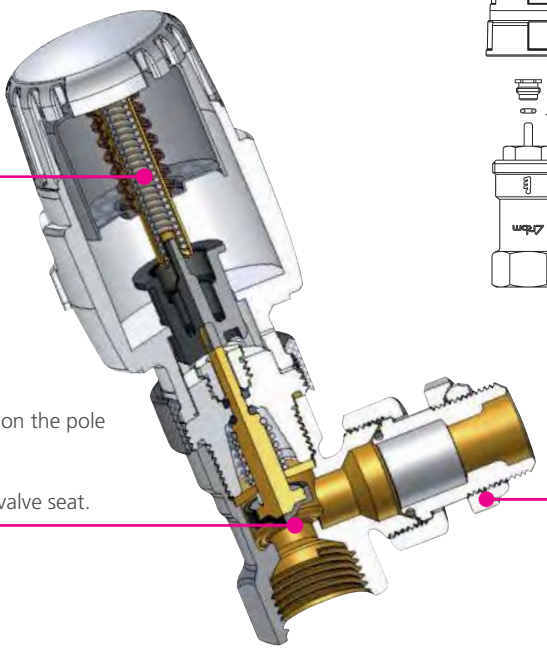



Pole with vulcanized elastomer disc
Elastomer directly vulcanized on the pole disc:
- Avoids noise
- Disc does not stick on the valve seat.

RFS radiator sealing made in PTFE
Water sealing vs leakage is assured for a long lasting time!

LOCKSHIELD VALVE WITH MICROMETRIC SETTING:

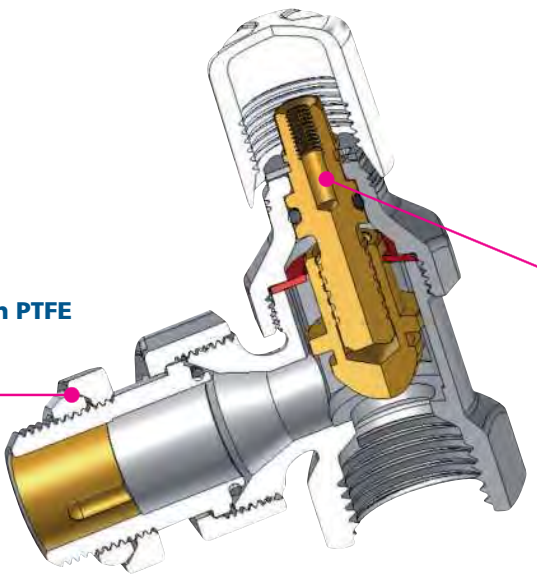

"Heavy" Lockshield valve
Micrometric setting!
Perfect for balancing.
KVS values (min. 9 values) can be set through the hand wheel on the top

RFS radiator sealing made in PTFE
Water sealing vs leakage is assured for a long lasting time!

31



Angle valve with thermostatic option for iron pipe, complying with standard UNI-EN 215.

Nickel brass body.
Double seal obturator.
Elastomer seals.
Shockproof ABS handwheel.
Threaded angled connection F UNI-EN-ISO 228 for iron pipe.
Connection to terminal through threaded M RFS (UNI-EN-ISO 228) with PTFE pre-gasket ogive (only for 3/8" and 1/2" diameters).

- Max operating temperature 110 °C
- Max operating pressure 10 Bar

D28

Angle valve with thermostatic option for iron pipe
Robinet thermostatique coudé pour tube métal
Угловой терморегулирующий клапан для железных труб
Supapă cu reglare termostatică cu cot pentru conductă din fier
Válvula termostatizable escuadra, niquelada, conexión para tubo de hierro
Mit Thermostat ausrüstbares Eckventil für Eisenrohr

Code	Size	Kv (m³/h)	Pack	Carton
31.03.00	G 3/8"	2,45	10	100
31.04.00	G 1/2"	2,45	10	100
31.05.00	G 3/4"	-	10	60
2640.06.90*	G 1"	-	5	20

**Thermostatically controlled valve with presetting*
Licensed use of trademark no. 43 (3/8" - 1/2")

Technical drawing on page 208

Use only series 9 lockshield valve with 3/4" and 1" valves (see page 126).

007

32



Straight valve with thermostatic option for iron pipe, complying with standard UNI-EN 215.

Nickel brass body.
Double seal obturator.
Elastomer seals.
Shockproof ABS handwheel.
Threaded straight connection F UNI-EN-ISO 228 for iron pipe.
Connection to terminal through threaded M RFS (UNI-EN-ISO 228) with PTFE pre-gasket ogive (only for 3/8" and 1/2" diameters).

- Max operating temperature 110 °C
- Max operating pressure 10 Bar

D28

Straight valve with thermostatic option for iron pipe
Robinet thermostatique droit pour tube métal
Прямой терморегулирующий клапан для железных труб
Supapă cu posibilitate de reglare termostatică dreaptă pentru conductă din fier
Válvula termostatizable recta, niquelada, conexión para tubo de hierro
Mit Thermostat ausrüstbares Ventil gerade für Eisenrohr

Code	Size	Kv (m³/h)	Pack	Carton
32.03.00	G 3/8"	1,60	10	100
32.04.00	G 1/2"	1,60	10	100
32.05.00	G 3/4"	-	10	50
2641.06.90*	G 1"	-	5	20

**Thermostatically controlled valve with presetting*
Licensed use of trademark no. 43 (3/8" - 1/2")

Technical drawing on page 209

Use only series 10 lockshield valve with 3/4" and 1" valves (see page 126).

007

48



Angle valve with thermostatic option for copper or polyethylene pipe, complying with standard UNI-EN 215.

Nickel brass body.
Double seal obturator.
Elastomer seals.
Shockproof ABS handwheel.
RBM standard threaded angled M connection, for copper, polyethylene and multilayer pipe fittings.
Connection to terminal through threaded M RFS (UNI-EN-ISO 228) with PTFE pre-gasket ogive.

- Max operating temperature 110 °C
- Max operating pressure 10 Bar

D28

Angle valve with thermostatic option for copper or polyethylene pipe
Robinet thermostatique coudé pour tube en cuivre ou polyéthylène
Угловой терморегулирующий клапан для медных и полиэтиленовых труб
Supapă cu posibilitate de reglare termostatică cu cot pentru conductă din cupru sau polietilenă
Válvula termostatizable escuadra, niquelada, conexión adaptador Standard RBM para tubo de cobre, polietileno y multicapa
Mit Thermostat ausrüstbares Eckventil für Kupfer- oder Polyethylenrohr

Code	Size	Kv (m³/h)	Pack	Carton
48.03.00	G 3/8"	2,45	10	100
48.04.00	G 1/2"	2,45	10	100

Licensed use of trademark no. 43

Technical drawing on page 209

Use fittings with Standard RBM thread (see page 180) for pipe connection.

007

49



Thermostatic straight valve for copper or polyethylene pipe, complying with standard UNI-EN 215.

Nickel brass body.
Double seal obturator.
Elastomer seals.
Shockproof ABS handwheel.
RBM standard threaded straight M connection for copper, polyethylene and multilayer pipe fittings.
Connection to terminal through threaded M RFS (UNI-EN-ISO 228) with PTFE pre-gasket ogive.

- Max operating temperature 110 °C
- Max operating pressure 10 Bar

CE 028

007

Straight valve with thermostatic option for copper or polyethylene pipe
Robinet thermostatique droit pour tube en cuivre ou polyéthylène
Прямой терморегулирующий клапан для медных и полиэтиленовых труб
Supapă cu posibilitate de reglare termostatică dreaptă pentru conductă din cupru sau polietilenă
Válvula termostatizable recta, niquelada, conexión adaptador Standard RBM para tubo de cobre, polietileno y multicapa
Mit Thermostat ausrüstbares Ventil gerade für Kupfer- oder Polyethylenrohr

Code	Size	Kv (m³/h)	Pack	Carton
49.03.00	G 3/8"	1,60	10	100
49.04.00	G 1/2"	1,60	10	100

Licensed use of trademark no. 43

Technical drawing on page 209

Use fittings with Standard RBM thread (see pg. 180) for pipe connection.

179



Inverse angle valve with thermostatic option for iron pipe.

Nickel brass body.
Double seal obturator.
Elastomer seals.
Shockproof ABS handwheel.
Threaded angled connection F UNI-EN-ISO 228 for iron pipe.
Connection to terminal through threaded M RFS (UNI-EN-ISO 228) with PTFE pre-gasket ogive.

- Max operating temperature 110 °C
- Max operating pressure 10 Bar

007

Inverse angle valve with thermostatic option for iron pipe
Robinet thermostatique inversée pour tube métal
Осевой терморегулирующий клапан для железных труб
Supapă cu opțiune de reglare termostatică inversă pentru conductă din fier
Válvula termostatizable inversa, niquelada, conexión para tubo de hierro
Mit Thermostat ausrüstbares Umkehrventil für Eisenrohr

Code	Size	Kv (m³/h)	Pack	Carton
179.03.00	G 3/8"	0,99	10	100
179.04.00	G 1/2"	0,99	10	100

Technical drawing on page 209

180



Inverse angle valve with thermostatic option for copper or polyethylene pipe

Nickel brass body.
Double seal obturator.
Elastomer seals.
Shockproof ABS handwheel.
RBM standard threaded straight M connection for copper, polyethylene and multilayer pipe fittings.
Connection to terminal through threaded M RFS (UNI-EN-ISO 228) with PTFE pre-gasket ogive.

- Max operating temperature 110 °C
- Max operating pressure 10 Bar

007

Inverse angle valve with thermostatic option for copper or polyethylene pipe
Robinet thermostatique inversée pour tube cuivre ou polyéthylène
Осевой терморегулирующий клапан для медных и полиэтиленовых труб
Supapă cu opțiune de reglare termostatică inversă pentru conductă din cupru sau polietilenă
Válvula termostatizable inversa, niquelada, conexión adaptador Standard RBM para tubo de cobre, polietileno y multicapa
Mit Thermostat ausrüstbares Umkehrventil für Kupfer- oder Polyethylenrohr

Code	Size	Kv (m³/h)	Pack	Carton
180.03.00	G 3/8"	0,99	10	100
180.04.00	G 1/2"	0,99	10	100

Technical drawing on page 209

Use fittings with Standard RBM thread (see pg. 180) for pipe connection.

395



Angle valve with thermostatic option for iron tube with reversible connections and orthogonal command.

Nickel brass body.
Double seal obturator.
Elastomer seals.
Shockproof ABS handwheel.
Straight threaded connections F UNI-EN-ISO 228 for iron pipe, reversible.
Connection to terminal through threaded M RFS (UNI-EN-ISO 228) with PTFE pre-gasket ogive.

- Max operating temperature 110 °C
- Max operating pressure 10 Bar

Valve with thermostatic option with reversible connections for iron pipe
Robinet thermostatique à raccords réversibles pour tube métal
Терморегулирующий клапан с обратимыми соединениями для железных труб
Supapă cu posibilitate de reglare termostatică cu prinderi reversibile pentru conductă din fier
Válvula termostatizable 3 vías, niquelada, conexión para tubo de hierro
Mit Thermostat ausrüstbares Ventil mit umkehrbaren Anschlüssen für Eisenrohr

Code	Size	Kv (m^3/h)	Pack	Carton
395.03.00	G 3/8"	1,55	10	100
395.04.00	G 1/2"	1,60	10	100

Technical drawing on page 210

System side reversible connections with closing cap of unused way.

To turn the valves for iron pipes into valves for copper or polyethylene pipes, provide for the adapter fitting code 83.0X.00 (see page 186).

007

2078



Thermostatic kit: Angle valve for thermostatic control for iron pipe, complying with standard UNI-EN 215. Angle lockshield valve for iron pipe.

Nickel brass body.
Double seal obturator.
Elastomer seals.
Shockproof ABS handwheel.
Liquid expansion thermostatic command TL30 with built-in sensor.
Threaded angled connection F UNI-EN-ISO 228 for iron pipe.
Connection to threaded terminal M UNI-EN-ISO 228.

- Max operating temperature 110 °C
- Max operating pressure 10 Bar

028

jet-line

Angle valve for thermostatic control and lockshield valve for iron pipe
Robinet thermostatique et détendeur coudé pour tube métal
Угловой термостатический клапан и настроечной клапан для железных труб
Supapă termostatică și acționator cu cot pentru conductă din fier
Válvula termostatizable y detentor escuadra Jet-Line, y Cabezal termostático conexión adaptador tubo de hierro
Thermostatventil und Rücklaufverschraubung gewinkelt für Eisenrohr

Code	Size	Pack	Carton
2078.03.00	3/8"	10	100
2078.04.00	1/2"	10	100

** Licensed use of trademark no. 43*

Supplied with:
valve with thermostatic option;
liquid expansion thermostatic head;
lockshield valve.
Kit components supplied in separate packages.

045

2079





Thermostatic kit: Straight thermostatic valve for iron pipe, complying with standard UNI-EN 215. Straight lockshield valve for iron pipe.

Nickel brass body.
Double seal obturator.
Elastomer seals.
Shockproof ABS handwheel.
Liquid expansion thermostatic command TL30 with built-in sensor.
Threaded straight connection F UNI-EN-ISO 228 for iron pipe.
Connection to threaded terminal M UNI-EN-ISO 228.

- Max operating temperature 110 °C
- Max operating pressure 10 Bar

028

jet-line

Straight valve for thermostatic control and lockshield valve for iron pipe
Robinet thermostatique et détendeur droits pour tube métal
Прямой термостатический клапан и настроечной клапан для железных труб
Supapă termostatică și acționator drepte pentru conductă din fier
Válvula termostatizable y detentor recto Jet-Line, y Cabezal termostático conexión adaptador tubo de hierro
Thermostatventil und Rücklaufverschraubung gerade für Eisenrohr

Code	Size	Pack	Carton
2079.03.00	3/8"	10	100
2079.04.00	1/2"	10	100

** Licensed use of trademark no. 43*

Supplied with:
valve with thermostatic option;
liquid expansion thermostatic head;
lockshield valve.
Kit components supplied in separate packages.

045

2080





Kit with thermostatic option: Angle valve with thermostatic option for iron pipe, complying with standard UNI-EN 215. Angle lockshield valve for iron pipe.

Nickel brass body.
Double seal obturator.
Elastomer seals.
Shockproof ABS handwheel.
Threaded angled connection F UNI-EN-ISO 228 for iron pipe.
Connection to threaded terminal M UNI-EN-ISO 228.

- Max operating temperature 110 °C
- Max operating pressure 10 Bar

028

jet-line

Angle valve with thermostatic option and lockshield valve for iron pipe
Robinet thermostatique et détendeur coudé pour tube métal
Угловой терморегулирующий клапан и настроечный клапан для железных труб
Supapă cu posibilitate de reglare termostatică și acționator cu cot pentru conductă din fier
Válvula termostatizable y detentor escuadra Jet-Line, conexión adaptador tubo de hierro
Ventil mit doppelter Einstellung Winkel für Eisenrohr

Code	Size	Pack	Carton
2080.03.00	3/8"	10	100
2080.04.00	1/2"	10	100

** Licensed use of trademark no. 43*

Supplied with:
valve with thermostatic option;
lockshield valve.
Kit components supplied in separate packages.

045

2081





Kit with thermostatic option: Straight valve with thermostatic option for iron pipe, complying with standard UNI-EN 215. Straight lockshield valve for iron pipe.

Nickel brass body.
Double seal obturator.
Elastomer seals.
Shockproof ABS handwheel.
Threaded straight connection F UNI-EN-ISO 228 for iron pipe.
Connection to threaded terminal M UNI-EN-ISO 228.

- Max operating temperature 110 °C
- Max operating pressure 10 Bar

Straight valve with thermostatic option and lockshield valve for iron pipe
Robinet thermostatique et détendeur droits pour tube métal
Прямой терморегулирующий клапан и настроечный клапан для железных труб
Supapă cu posibilitate de reglare termostatică și acționator drepte pentru conductă din fier
Válvula termostatizable y detentor recto Jet-Line, conexión adaptador tubo de hierro
Thermostatisierbares Ventil und Rücklaufverschraubung gerade für Eisenrohr

Code	Size	Pack	Carton
2081.03.00	3/8"	10	100
2081.04.00	1/2"	10	100

** Licensed use of trademark no. 43*

Supplied with:
valve with thermostatic option;
lockshield valve.
Kit components supplied in separate packages.

045

1342





Thermostatic kit: Angle valve for thermostatic control for copper or polyethylene pipe, complying with standard UNI-EN 215. Angle lockshield valve for copper or polyethylene pipe.

Nickel brass body.
Double seal obturator.
Shockproof ABS handwheel.
Elastomer seals.
Liquid expansion thermostatic command TL30 with built-in sensor.
Threaded angled M standard RBM connection for copper, polyethylene, multilayer pipe fittings.
Connection to threaded terminal M UNI-EN-ISO 228.

- Max operating temperature 110 °C
- Max operating pressure 10 Bar

Angle valve for thermostatic control and lockshield valve for copper or polyethylene pipe
Robinet thermostatique et détendeur coudé pour tube en cuivre ou polyéthylène
Угловой термостатический клапан и настроечный клапан для медных и полиэтиленовых труб
Supapă termostatică și acționator cu cot pentru conductă din cupru sau polietilenă
Válvula termostatizable y detentor escuadra Jet-Line, y Cabezal termostático conexión adaptador Standar RBM para tubo de cobre, polietileno y multicapa
Handventil und Rücklaufverschraubung gewinkelt für Kupfer- oder Polyethylenrohr

Code	Size	Pack	Carton
1342.03.00	RBM 3/8"	10	100
1342.04.00	RBM 1/2"	10	100

** Licensed use of trademark no. 43*
System side standard RBM thread W 24.5x19F

Supplied with:
valve with thermostatic option;
liquid expansion thermostatic head;
lockshield valve.
Use fittings with Standard RBM thread (see pg. 180) for pipe connection.
Kit components supplied in separate packages.

045

1343





Thermostatic kit: Straight valve for thermostatic control for copper or polyethylene pipe, complying with standard UNI-EN 215. Straight lockshield valve for copper or polyethylene pipe.

Nickel brass body.
Double seal obturator.
Shockproof ABS handwheel.
Elastomer seals.
Liquid expansion thermostatic command TL30 with built-in sensor.
Threaded straight M standard RBM connection for copper, polyethylene, multi-layer pipe fittings.
Connection to threaded terminal M UNI-EN-ISO 228.

- Max operating temperature 110 °C
- Max operating pressure 10 Bar

0528

jet-line

Straight valve for thermostatic control and lockshield valve for copper or polyethylene pipe
Robinet thermostatique et détendeur droit pour tube en cuivre ou polyéthylène
Прямой термостатический клапан и настроечный клапан для медных и полиэтиленовых труб
Supapă termostatică și acționator drepte pentru conductă din cupru sau polietilenă
Válvula termostatizable y detentor recto Jet-Line, y Cabezal termostático conexión adaptador Standar RBM para tubo de cobre, polietileno y multicapa
Thermostatventil und Rücklaufverschraubung gerade für Kupfer- oder Polyethylenrohr

Code	Size	Pack	Carton
1343.03.00	RBM 3/8″	10	100
1343.04.00	RBM 1/2″	10	100

** Licensed use of trademark no. 43*
System side standard RBM thread W 24.5x19F

Supplied with:
valve with thermostatic option;
liquid expansion thermostatic head;
lockshield valve.
Use fittings with Standard RBM thread (see pg. 180) for pipe connection.
Kit components supplied in separate packages.

045

1344





Kit with thermostatic option: Angle valve with thermostatic option for copper or polyethylene pipe, complying with standard UNI-EN 215. Angle lockshield valve for copper or polyethylene pipe.

Nickel brass body.
Double seal obturator.
Shockproof ABS handwheel.
Elastomer seals.
Threaded angled M standard RBM connection for copper, polyethylene, multilayer pipe fittings.
Connection to threaded terminal M UNI-EN-ISO 228.

- Max operating temperature 110 °C
- Max operating pressure 10 Bar

0528

jet-line

Angle valve with thermostatic option and lockshield valve for copper or polyethylene pipe
Robinet thermostatique et détendeur coudé pour tube en cuivre ou polyéthylène
Угловой терморегулирующий и настроечный клапан для медных и полиэтиленовых труб
Supapă cu reglare termostatică și acționator cu cotpentru conductă din cupru sau polietilenă
Válvula termostatizable y detentor escuadra Jet-Line, conexión adaptador Standard RBM para tubo de cobre, polietileno y multicapa
Thermostierbares Ventil und Rücklaufverschraubung gewinkelt für Kupfer- oder Polyethylenrohr

Code	Size	Pack	Carton
1344.03.00	RBM 3/8″	10	100
1344.04.00	RBM 1/2″	10	100

** Licensed use of trademark no. 43*
System side standard RBM thread W 24.5x19F

Supplied with:
valve with thermostatic option;
lockshield valve.
Use fittings with Standard RBM thread (see pg. 180) for pipe connection.
Kit components supplied in separate packages.

045

1345



Kit with thermostatic option: Straight valve with thermostatic option for copper or polyethylene pipe, complying with standard UNI-EN 215. Straight lockshield valve for copper or polyethylene pipe.

Nickel brass body.
Double seal obturator.
Shockproof ABS handwheel.
Elastomer seals.
RBM standard threaded straight M connection for copper, polyethylene and multilayer pipe fittings.
Connection to threaded terminal M UNI-EN-ISO 228.

- Max operating temperature 110 °C
- Max operating pressure 10 Bar

0128

jet-line

Straight valve with thermostatic option and lockshield valve for copper or polyethylene pipe
Robinet thermostatique et détendeur droit pour tube en cuivre ou polyéthylène
Прямой терморегулирующий и настроечный клапан для медных и полиэтиленовых труб
Supapă cu posibilitate de reglare termostatică și acționator drepte pentru conductă din cupru sau polietilenă
Válvula termostatizable y detentor recto Jet-Line, conexión adaptador Standard RBM para tubo de cobre, polietileno y multicapa
Thermostierbares Ventil und Rücklaufverschraubung gerade für Kupfer- oder Polyethylenrohr

Code	Size	Pack	Carton
1345.03.00	RBM 3/8"	10	100
1345.04.00	RBM 1/2"	10	100

** Licensed use of trademark no. 43*
System side standard RBM thread W 24.5x19F

Supplied with:
valve with thermostatic option;
lockshield valve.
Use fittings with Standard RBM thread (see pg. 180) for pipe connection.
Kit components supplied in separate packages.

045

THERMOSTATIC VALVE WITH PRE-SETTING

Thanks to a special internal device they allow the pre-setting of the head loss quickly and effectively.

The use in combination with thermostatic heads makes it possible to keep the ambient temperature constant, thus guaranteeing an effective energy saving.



Micrometric setting!

KVS values can be set through the pole on the top of the cap unit, simply using the adjustment tool.
6 Kvs values for pre-setting!

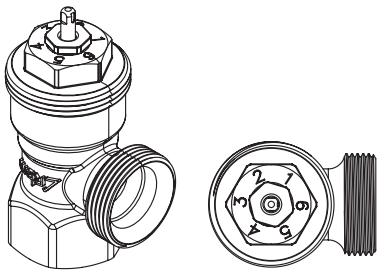

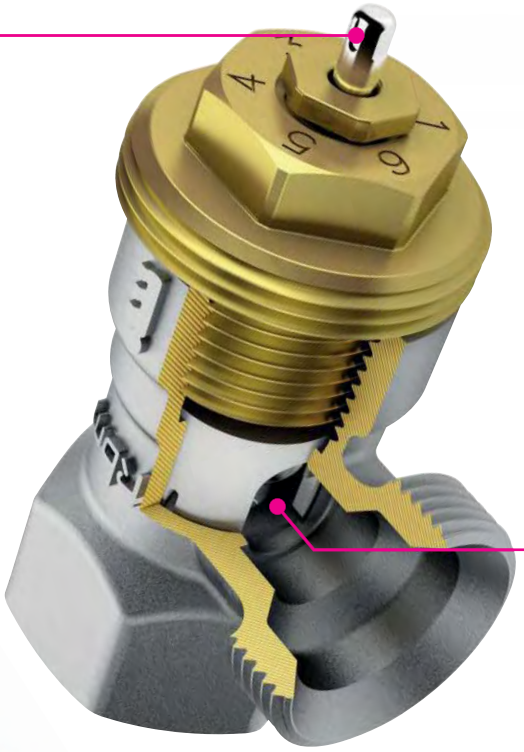

Pole with vulcanized elastomer disc.

Elastomer directly vulcanized on the pole disc:

- Avoids noise
- Disc does not stick on the valve seat



Adjustment tool

Cap unit for pre-setting

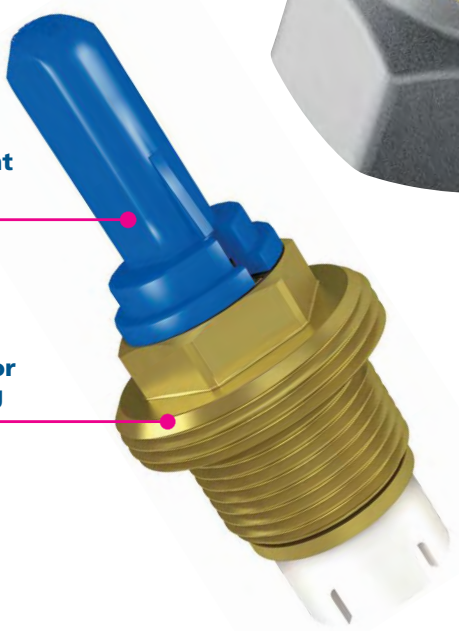

Liquid expansion thermostatic sensor. HIGHER SENSITIVITY!

Possibility of maintenance service while system is in operation.

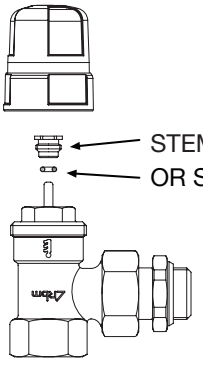

2640



Angle radiator valve for iron pipe with thermostatic option and pre-setting.

Nickel brass body.
Double seal obturator.
Elastomer seals.
Shockproof ABS handwheel.
Threaded angled connection F UNI-EN-ISO 228 for iron pipe.
Connection to threaded terminal M UNI-EN-ISO 228.

- Max operating temperature 110 °C
- Max operating pressure 10 Bar

028

Technical drawing on page 208

Valve with thermostatic option and pre-setting.
Use spanner code 2878.00.00 (see page 118) to adjust Kvs values.
Use only series 9 lockshield valve with 3/4" and 1" valves (see page 126).

Angle radiator valve for iron pipe with thermostatic option and pre-setting
Robinet thermostatique avec préréglage coudé pour tube métal
Угловой терморегулирующий клапан с предварительным регулированием для железной трубы
Robinet termostatabil cu prereglare, colţar, pentru tuburi de fier
Válvula controlada termostáticamente con pre-regulación, de ángulo, para tubo de hierro
Thermostatventil mit Voreinstellung, abgewinkelt, für Eisenrohr

Code	Size	Pack	Carton
2640.03.90	G 3/8"	10	100
2640.04.90	G 1/2"	10	100
2640.05.90	G 3/4"	10	60
2640.06.90	G 1"	5	20

Licensed use of trademark no. 43 (3/8" - 1/2")

007

2641



Straight radiator valve for iron pipe with thermostatic option and pre-setting.

Nickel brass body.
Double seal obturator.
Elastomer seals.
Shockproof ABS handwheel.
Threaded straight connection F UNI-EN-ISO 228 for iron pipe.
Connection to threaded terminal M UNI-EN-ISO 228.

- Max operating temperature 110 °C
- Max operating pressure 10 Bar

028

Technical drawing on page 209

Valve with thermostatic option and pre-setting.
Use spanner code 2878.00.00 (see page 118) to adjust Kvs values.
Use only series 10 lockshield valve with 3/4" and 1" valves (see page 126).

Straight radiator valve for iron pipe with thermostatic option and pre-setting
Robinet thermostatique avec préréglage droite pour tube métal
Прямой терморегулирующий клапан с предварительным регулированием для железной трубы
Robinet termostatabil cu prereglare, drept, pentru tuburi de fier
Válvula controlada termostáticamente con pre-regulación, recta, para tubo de hierro
Thermostatventil mit Voreinstellung, gerade, für Eisenrohr

Code	Size	Pack	Carton
2641.03.90	G 3/8"	10	100
2641.04.90	G 1/2"	10	100
2641.05.90	G 3/4"	10	50
2641.06.90	G 1"	5	20

Licensed use of trademark no. 43 (3/8" - 1/2")

007

2642



Angle radiator valve for copper and polyethylene pipe with thermostatic option and pre-setting.

Nickel brass body.
Double seal obturator.
Elastomer seals.
Shockproof ABS handwheel.
Threaded angled M standard RBM connection for copper, polyethylene, multilayer pipe fittings.
Connection to threaded terminal M UNI-EN-ISO 228.

- Max operating temperature 110 °C
- Max operating pressure 10 Bar

028

Angle radiator valve for copper and polyethylene pipe with thermostatic option and pre-setting
Robinet thermostatique avec préréglage coudé pour tube en cuivre ou polyéthylène
Угловой терморегулирующий клапан с предварительным регулированием для трубы из меди или полиэтилена
Robinet termostatabil cu prereglare, colţar, pentru tuburi de cupru sau polietilenă
Válvula controlada termostáticamente con pre-regulación, de ángulo, para tubo de cobre o polietileno
Thermostatventil mit Voreinstellung, abgewinkelt, für Kupfer- oder Polyethylenrohr

Code	Size	Pack	Carton
2642.03.90	G 3/8"	10	100
2642.04.90	G 1/2"	10	100

Licensed use of trademark no. 43

Technical drawing on page 209

Valve with thermostatic option and pre-setting.
Use fittings with Standard RBM thread (see pg. 180) for pipe connection.
Use spanner code 2878.00.00 (see page 118) to adjust Kvs values.

007

2643



Straight radiator valve for copper and polyethylene pipe with thermostatic option and pre-setting.

Nickel brass body.
Double seal obturator.
Elastomer seals.
Shockproof ABS handwheel.
Threaded straight M standard RBM connection for copper, polyethylene, multi-layer pipe fittings.
Connection to threaded terminal M UNI-EN-ISO 228.

- Max operating temperature 110 °C
- Max operating pressure 10 Bar

028

Straight radiator valve for copper and polyethylene pipe with thermostatic option and pre-setting
Robinet thermostatique avec préréglage droit pour tube en cuivre ou polyéthylène
Прямой терморегулирующий клапан с предварительным регулированием для трубы из меди или полиэтилена
Robinet termostatabil cu prereglare, drept, pentru tuburi de cupru sau polietilenă
Válvula controlada termostáticamente con pre-regulación, recta, para tubo de cobre o polietileno
Thermostatventil mit Voreinstellung, gerade, für Kupfer- oder Polyethylenrohr

Code	Size	Pack	Carton
2643.03.90	G 3/8"	10	100
2643.04.90	G 1/2"	10	100

Licensed use of trademark no. 43

Technical drawing on page 209

Valve with thermostatic option and pre-setting.
Use fittings with Standard RBM thread (see pg. 180) for pipe connection.
Use spanner code 2878.00.00 (see page 118) to adjust Kvs values.

007

2720



Radiator reversible valve for iron pipe with thermostatic option and pre-setting.

Nickel brass body.
Double seal obturator.
Elastomer seals.
Shockproof ABS handwheel.
Straight threaded connections F UNI-EN-ISO 228 for iron pipe, reversible.
Connection to threaded terminal M UNI-EN-ISO 228.

- Max operating temperature 110 °C
- Max operating pressure 10 Bar

Technical drawing on page 210

Valve with thermostatic option and pre-setting.
System side reversible connections with closing cap of unused way.
Use spanner code 2878.00.00 (see page 118) to adjust Kvs values.
To turn the valves for iron pipes into valves for copper or polyethylene pipes, provide for the adapter fitting code

Radiator reversible valve for iron pipe with thermostatic option and pre-setting
Robinet thermostatique avec préréglage avec raccords réversibles pour tube métal
Терморегулирующий клапан с предварительным регулированием с реверсивными креплениями для железной трубы
Robinet termostatabil cu prereglare, cu racorduri reversibile, pentru tuburi de fier
Válvula controlada termostáticamente con pre-regulación y racores reversibles, para tubo de hierro
Thermostatventil mit Voreinstellung, mit umkehrbaren Anschlüssen für Eisenrohr

Code	Size	Pack	Carton
2720.03.90	G 3/8"	10	10
2720.04.90	G 1/2"	10	10

007

2878



Cap adjusting wrench.

To adjust the kvs by simply acting on the external end of the control rod's thermostatic screw unit.

To be used to adjust valves size 3/8" - 1/2" - 3/4". Not suitable to adjust 1" valves.

Cap adjusting wrench
Clé pour réglage piston
Ключ для регулирования колпака
Cheie pentru reglarea capișonului
Llave de regulación de sombrerete
Schlüssel zur Haubenregulierung

Code	Pack	Carton
2878.00.00	10	10

007

THERMOSTATIC VALVE WITH PRE-SETTING INDEPENDENT FROM PRESSURE



The **thermostatic valve with pre-setting independent from pressure** is a radiator valve that performs the functions of a thermostatic valve and a differential pressure regulator. Designed for temperature control and hydraulic balancing in a single product, it is applied in double-pipe heating systems.
The ring nut for the flow rate pre-setting limits the maximum flow passing through the radiator and thereby ensures quick and effective circuit balancing. The differential pressure regulator – the nerve centre of the valve – resets pressure variations in a heating system, thus ensuring the preset flow rate.
When used in conjunction with the RBM thermostatic head, it maintains a constant temperature in the environment, ensuring energy savings.

Micrometric setting!

KVS values can be set through the pole on the top of the cap unit, simply using the adjustment tool.
6 Kvs values for pre-setting!

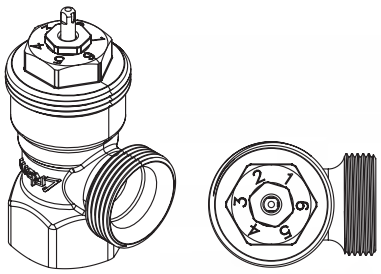

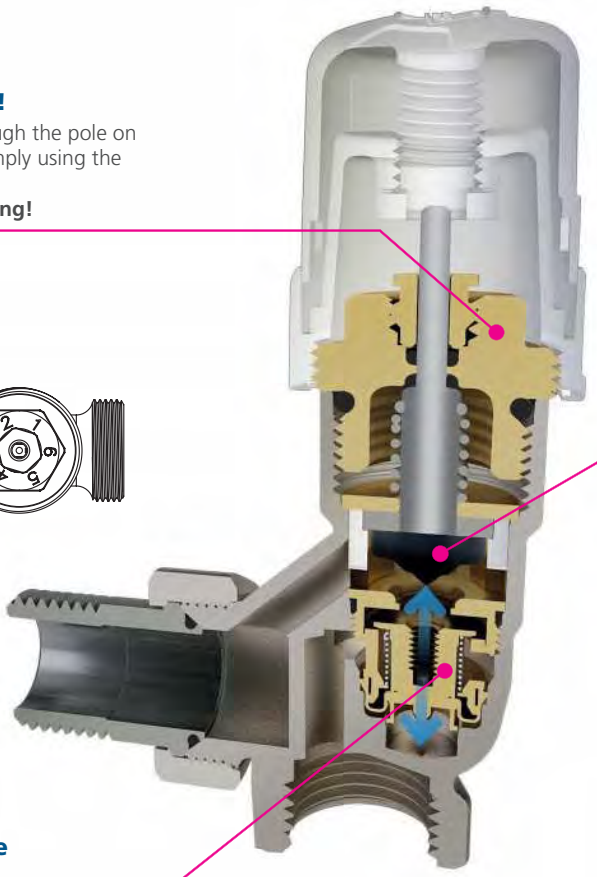

Pole with vulcanized elastomer disc.

Elastomer directly vulcanized on the pole disc:

- Avoids noise
- Disc does not stick on the valve seat



Differential pressure regulator (ΔP)

Resets pressure variations in systems.

Liquid expansion thermostatic sensor. HIGH SENSITIVITY!

Possibility of maintenance service while system is in operation.

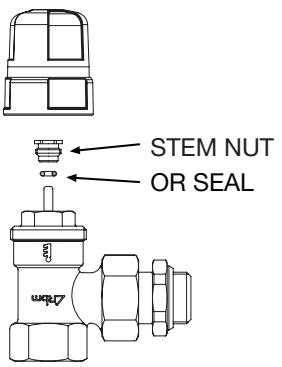

3563





Angle valve with thermostatic option with pre-setting independent from pressure for iron pipe.

Nickel brass body.
Double seal obturator.
Elastomer seals.
Shockproof ABS handwheel.
Threaded angled connection F UNI-EN-ISO 228 for iron pipe.
Connection to threaded terminal M UNI-EN-ISO 228.

- Max operating temperature 110 °C
- Max operating pressure 10 Bar

Technical drawing on page 210

Valve with thermostatic option and pre-setting.
Use spanner code 2878.00.00 (see page 118) to adjust Kvs values.

Thermostatically controlled corner valve with pre-setting independent from pressure for iron pipe
Robinet thermostatique avec préréglage indépendant de la pression coudé pour tube métal
Термостатический клапан с предварительной настройкой не зависящий от давления, под углом для железной трубы
Robinet controlat termostatic cu reglarea independentă a presiunii cu cot pentru țeava din fier
Válvula termostatizable con pre-regulación independiente de la presión de esquina para tubo de hierro
Winkelförmige Thermostatventile für Eisenrohr, mit Voreinstellung, die vom Druck unabhängig sind

Code	Size	Pack	Carton
3563.03.90	G 3/8"	7	28
3563.04.90	G 1/2"	7	28

007

3564





Straight valve with thermostatic option with pre-setting independent from pressure for iron pipe.

Nickel brass body.
Double seal obturator.
Elastomer seals.
Shockproof ABS handwheel.
Threaded straight connection F UNI-EN-ISO 228 for iron pipe.
Connection to threaded terminal M UNI-EN-ISO 228.

- Max operating temperature 110 °C
- Max operating pressure 10 Bar

Technical drawing on page 210

Valve with thermostatic option and pre-setting.
Use spanner code 2878.00.00 (see page 118) to adjust Kvs values.

Thermostatically controlled straight valve with pre-setting independent from pressure for iron pipe
Robinet thermostatique avec préréglage indépendant de la pression droit pour tube métal
Термостатический клапан с предварительной настройкой не зависящий от давления, прямой для железной трубы
Robinet controlat termostatic cu reglarea independentă a presiunii drept pentru țeava din fier
Válvula termostatizable con pre-regulación independiente de la presión recta para tubo de hierro
Gerade Thermostatventile für Eisenrohr, mit Voreinstellung, die vom Druck unabhängig sind

Code	Size	Pack	Carton
3564.03.90	G 3/8"	7	28
3564.04.90	G 1/2"	7	28

007

590







Thermostatic control for thermostatically-controlled valves. Internal sensitive element with liquid expansion.

Prearranged for temperature limitation and anti-tampering blockage.

- Max storage temperature 50 °C
- Anti-freeze triggering (*) 7 °C
- Setting field (1 ÷ 5) +10 ÷ +30 °C
- Hysteresis 0.3 °C
- Max differential pressure (head mounted on valve) 1 Bar
- Thermostatic ethyl-acetate bulb liquid
- Distance sensor cable length 2m (series TL 20)



Technical drawing on page 210

Liquid expansion sensor (TL10 - TL30 - TL70 - TL10W).
High energy efficiency.
Approved in Class I.

Thermostatic head with liquid expansion sensor
Tête thermostatique avec capteur à dilatation de liquide
Термостатическая головка с жидкостным сенсором
Cap termostatic cu senzor cu dilatare de lichid
Cabezal termostático blanco con sensor a líquido
Thermostatkopf mit Sensor Flüssigkeitsausdehnung

Code	Model	Pack	Carton
590.00.00*	TL10	10	100
720.00.30*	TL30	10	100
2633.00.00*	TL70	10	100
3087.00.00**	TL10W	1	100

** Licensed use of trademark no. 43*
*** Reduced W value*

Thermostatic head with distance sensor
Tête thermostatique avec capteur à distance
Термостатическая головка с дистанционным датчиком
Cap termostatic cu senzor la distanță
Cabeza termostática con sensor a distancia
Thermostatkopf mit Fernfühler

Code	Model	Pack	Carton
590.00.10*	TL20	1	25

** Licensed use of trademark nr. 43*

008

2501



Programmable thermostatic command with weekly program, for valves with thermostatic option.

- Power supply: 2 1,5V AA type batteries
- Autonomy: 5 years
- Operation: Automatic with two temperature levels (comfort or economy), or manual through the select dial
- Daily switchings: 4 in comfort mode and 4 in economy mode
- Functioning temperature: 0 ÷ +50 °C
- Anti-freeze protection temperature: 6 °C
- IP30 degree of protection
- Size (lxhxp): 52x83x65 mm
- Backlit display

Thermostatic head with weekly program
Tête chrono-thermostatique avec programme hebdomadaire
Хронотермостатическая головка с недельной программой
Cap crono-termostatic cu program săptămânal
Cabezal crono-termostático para válvulas termostatizables con programación semanal
Zeitthermostatkopf mit Wochenprogramm

Code	Power supply	Pack	Carton
2501.00.22	1.5 V	1	20

Programming device
Clé de programmation
Ключ для программирования
Cheie de programare
Llave de programación
Programmierschlüssel

Code	Ways	Pack	Carton
2962.00.02	x	1	20

To easily program the daily time bands of the COMFORT and ECONOMY temperatures on the central heating timer through the PC graphical interface. After saving on the device, the temperature profiles of the various rooms can be uploaded directly on the programmable thermostatic head.

058

2835



Thermostatic control for thermostatically-controlled valves. The remote control makes programming easier in any installation situation.

- Anti freezing protection: 8 °C
- Calibration field: (1 ÷ 5) 12 ÷ +28 °C
- Remote control cable length: 2m

Liquid expansion sensor. Remote command It makes installation procedures easier.

Thermostatic head with remote control
Tête thermostatique avec commande à distance
Термостатическая головка с дистанционным управлением
Cap termostatic cu comandă de la distanță
Cabeza termostática con mando a distancia
Thermostatkopf mit Fernsteuerung

Code	Pack	Carton
2835.00.02	1	1

058

306



Thermo-electrically controlled servo motor for valve with thermostatic option, complete with valve body clamping ring nut and electric power cable.

Normally closed valve position when power missing.

- Power supply 24/230 V
- Consumption 2.5W
- Frequency 50/60 Hz
- IP54 protection rating
- Operating temperature -5 ÷ +50 °C
- 4 mm stroke
- Switch contact rating (0.5A) 1 A (if any)

CE

Technical drawing on page 210

Servo control that can be matched with SERIES 608 - 2028 - 1410 - 1002 - 279 manifolds with a 50 mm centre distance, and Kilma-Zone SERIES 3615 - 3616 manifolds

Thermo-electrically controlled actuator
Servomoteur à commande électrothermique
Электротермический сервопривод
Servomotor cu comandă electrotermică
Cabezal electrotérmico normalmente cerrado para válvulas termostatizables
Servomotor mit elektrothermischer Steuerung

Code	Power supply	Pack	Carton
306.00.02	230V AC	1	50
306.00.12	24V AC	1	50

Version without auxiliary microswitch (2 wires)

Thermo-electrically controlled actuator, with auxiliary micro switch
Servomoteur à commande électrothermique avec microrupteur auxiliaire
Электротермический сервопривод с вспомогательным микропереключателем
Servomotor cu comandă electrotermică, cu microîntrerupător auxiliar
Cabezal electrotérmico normalmente cerrado con microinterruptor, para válvula termostatizable y válvula de zona compacta
Servomotor mit elektrothermischer Steuerung mit Hilfmikroschalter

Code	Power supply	Pack	Carton
306.00.42	230V AC	1	50
306.00.52	24V AC	1	50

Version supplied with auxiliary microswitch (4 wires)

015

209



Pair of temperature limitation inserts for thermostatic head.

For example to block the knob at position 3 (T=20 °C), insert the specific inserts in the two slots close to number 20 on the fixed knob. To limit the adjustment to a wider value, move the inserts to the desired positions.

Pair of inserts already included in the supply of the RBM thermostatic head.
Inserts compatible with RBM thermostatic head model TL10 - TL30 - TL70 - TL10W - TL20.

008

Pair of temperature limitation inserts for thermostatic head RBM
Paire d'inserts pour limitation de température pour tête thermostatique
Пара вставок для ограничения температуры в термостатических головках
Pereche de plăcuțe pentru limitarea temperaturii pentru cap termostatic
Par de limitadores para limitación de la abertura y bloqueo en cabezales termostáticos
Eisatzpaar für Temperaturbeschränkung für Thermostatkopf

Code	Pack	Carton
209.00.00	1	50

2274



Vandal proof and anti-tampering knob for thermostatic head RBM (Figure 1).

Specific tool for mounting vandal proof knob (Figure 2).

008

Vandal proof and anti-tampering knob for thermostatic head RBM
Poignée anti-vandalisme et anti-altération pour tête thermostatique RBM
Антивандальная и блокирующая насадка для термостатической головки RBM
Buton antivandalizare și antideteriorare pentru cap termostatic RBM
Sistema antirrobo y antimanipulación para cabezal termostático RBM
Zerstörungs- und abänderungssicheres Handrad für Thermostatkopf RBM

Code	Figure	Pack	Carton
227.40.05*	1+2	6	6
227.30.05**	2	1	1

**A 6-knob package includes a mounting tool code 2273.005*
***Tool supplied together with 12 fixing screws*

316



Vandal proof clamp for thermostatic head RBM.

The RBM thermostatic head can be equipped with a vandal proof clamp allowing it to be removed by just using the specific tool (code 2151.005).

008

Vandal proof clamp for thermostatic head RBM
Collier anti-vandalisme pour tête thermostatique RBM
Антивандальная скоба для термостатической головки RBM
Colier antivandalizare și antideteriorare pentru cap termostatic RBM
Abrazadera antirrobo para cabezal termostático RBM
Zerstörungssichere Schelle für Thermostatkopf RBM

Code	Figure	Pack	Carton
316.00.10	1	1	20
215.10.05	2	2	2
316.00.00	1+2	1	20

7



Manual single adjustment angle valve for iron pipe.

Nickel brass body.
Elastomer seals.
Shockproof ABS handwheel.
Threaded angled connection F UNI-EN-ISO 228 for iron pipe.
Connection to terminal through threaded M RFS (UNI-EN-ISO 228) with PTFE pre-gasket ogive (only for 3/8" and 1/2" diameters).

- Max operating temperature 110 °C
- Max operating pressure 10 Bar

Technical drawing on page 210

Single regulating angle valve for iron pipe
Robinet à simple réglage coudé pour tube métal
Угловой клапан простой регулировки для железных труб
Supapă cu reglare simplă cu cot pentru conductă din fier
Válvula manual escuadra de simple regulación, niquelada, conexión para tubo de hierro
Ventil mit einfacher Einstellung Winkel für Eisenrohr

Code	Size	Kv (m^3/h)	Pack	Carton
7.03.00	G 3/8"	3,2	10	100
7.04.00	G 1/2"	4,0	10	100
7.05.00	G 3/4"	10,8	10	60
7.06.00	G 1"	17,1	6	6
7.07.00	G 1"1/4	22,5	4	4

009

8



Manual single adjustment straight valve for iron pipe.

Nickel brass body.
Elastomer seals.
Shockproof ABS handwheel.
Threaded straight connection F UNI-EN-ISO 228 for iron pipe.
Connection to terminal through threaded M RFS (UNI-EN-ISO 228) with PTFE pre-gasket ogive (only for 3/8" and 1/2" diameters).

- Max operating temperature 110 °C
- Max operating pressure 10 Bar

Technical drawing on page 211

Single regulating straight valve for iron pipe
Robinet à simple réglage droite pour tube métal
Прямой клапан простой регулировки для железных труб
Supapă cu reglare simplă dreaptă pentru conductă din fier
Válvula manual recta de simple regulación, niquelada, conexión para tubo de hierro
Ventil mit einfacher Einstellung gerade für Eisenrohr

Code	Size	Kv (m^3/h)	Pack	Carton
8.03.00	G 3/8"	1,4	10	100
8.04.00	G 1/2"	1,8	10	100
8.05.00	G 3/4"	5,2	10	50
8.06.00	G 1"	8,2	6	6
8.07.00	G 1"1/4	22,5	4	4

009

27



Manual single adjustment angle valve for copper or polyethylene pipe.

Nickel brass body.
Elastomer seals.
Shockproof ABS handwheel.
Threaded angled M standard RBM connection for copper, polyethylene, multilayer pipe fittings.
Connection to threaded terminal M UNI-EN-ISO 228 with pre-gasket ogive in PTFE.

- Max operating temperature 110 °C
- Max operating pressure 10 Bar

Technical drawing on page 211

Use fittings with Standard RBM thread (see pg. 180) for pipe connection.

Single regulating angle valve for copper or polyethylene pipe
Robinet à simple réglage en angle pour tube cuivre ou polyéthylène
Угловой клапан простой регулировки для медных или полиэтиленовых труб
Supapă cu reglare simplă cu cot pentru conductă din cupru sau polietilenă
Válvula manual escuadra de simple regulación, niquelada, conexión adaptador Standard RBM para tubo de cobre, polietileno y multicapa
Ventil mit einfacher Einstellung Winkel für Kupfer- oder Polyethylenrohr

Code	Size	Kv (m^3/h)	Pack	Carton
27.03.00	G 3/8"	3,2	10	100
27.03.10	G 3/8" Ø 18 (*)	3,2	10	10
27.04.00	G 1/2"	4,0	10	100
27.04.10	G 1/2" Ø 18 (*)	4,0	10	10

(*): Can be fed by Ø18 copper pipes (kit valve + reduction code 57.18.00)

009

28



Manual single adjustment straight valve for copper or polyethylene pipe.

Nickel brass body.
Elastomer seals.
Shockproof ABS handwheel.
Threaded straight M standard RBM connection for copper, polyethylene, multi-layer pipe fittings.
Connection to threaded terminal M UNI-EN-ISO 228 with pre-gasket ogive in PTFE.

- Max operating temperature 110 °C
- Max operating pressure 10 Bar

Technical drawing on page 211

Use fittings with Standard RBM thread (see pg. 180) for pipe connection.

Single straight regulating valve for copper or polyethylene pipe
Robinet à simple réglage droite pour tube cuivre ou polyéthylène
Прямой клапан простой регулировки для медных или полиэтиленовых труб
Supapă cu reglare simplă dreaptă pentru conductă din cupru sau polietilenă
Válvula manual recta de simple regulación, niquelada, conexión adaptador Standard RBM para tubo de cobre, polietileno y multicapa
Ventil mit einfacher Einstellung gerade für Kupfer- oder Polyethylenrohr

Code	Size	Kv (m^3/h)	Pack	Carton
28.03.00	G 3/8"	1,4	10	100
28.03.10	G 3/8" Ø 18 (*)	1,4	10	10
28.04.00	G 1/2"	1,8	10	100
28.04.10	G 1/2" Ø 18 (*)	1,8	10	10

(*): Can be fed by Ø18 copper pipes (kit valve + reduction code 57.18.00)

009

9



Angle lockshield shut-off and regulating valve for iron pipe

Nickel brass body.
Elastomer seals.
Shockproof ABS cap.
Threaded angled connection F UNI-EN-ISO 228 for iron pipe.
Connection to terminal through threaded M RFS (UNI-EN-ISO 228) with PTFE pre-gasket ogive (only for 3/8" and 1/2" diameters).

- Max operating temperature 110 °C
- Max operating pressure 10 Bar

Angle lockshield regulating valve for iron pipe
Détendeur de réglage coudé pour tube métal
Угловой настроечный клапан для железных труб
Acționator de reglare cu cot pentru conductă din fier
Detentor escuadra Jet-Line, conexión para tubo de hierro
Rücklaufverschraubung zur Einstellung Winkel für Eisenrohr

Code	Size	Kv (m³/h)	Pack	Carton
9.03.00	G 3/8"	3,2	10	100
9.04.00	G 1/2"	4,0	10	100
9.05.00	G 3/4"	10,8	10	60
9.06.00	G 1"	17,1	6	6
9.07.00	G 1"1/4	22,5	4	4

Technical drawing on page 211

009

10



Straight lockshield shut-off and regulating valve for iron pipe.

Nickel brass body.
Elastomer seals.
Shockproof ABS cap.
Threaded straight connection F UNI-EN-ISO 228 for iron pipe.
Connection to terminal through threaded M RFS (UNI-EN-ISO 228) with PTFE pre-gasket ogive (only for 3/8" and 1/2" diameters).

- Max operating temperature 110 °C
- Max operating pressure 10 Bar

Straight lockshield regulating valve for iron pipe
Détendeur de régulation droit pour tube métal
Прямой настроечный клапан для железных труб
Acționator de reglare drept pentru conductă din fier
Detentor recto, niquelado, conexión para tubo de hierro
Rücklaufverschraubung zur Einstellung gerade für Eisenrohr

Code	Size	Kv (m³/h)	Pack	Carton
10.03.00	G 3/8"	1,4	10	100
10.04.00	G 1/2"	1,8	10	100
10.05.00	G 3/4"	4,9	10	60
10.06.00	G 1"	8,2	6	6
10.07.00	G 1"1/4	22,5	4	4

Technical drawing on page 212

009

29



Angle lockshield shut-off and regulating valve for copper or polyethylene pipe.

Nickel brass body.
Elastomer seals.
Shockproof ABS cap.
Threaded angled M standard RBM connection for copper, polyethylene, multilayer pipe fittings.
Connection to threaded terminal M UNI-EN-ISO 228 with pre-gasket ogive in PTFE.

- Max operating temperature 110 °C
- Max operating pressure 10 Bar

Angle lockshield regulating valve for copper or polyethylene pipe
Détendeur de régulation coudé pour tube cuivre ou polyéthylène
Угловой настроечный клапан для медных и полиэтиленовых труб
Acționator de reglare cu cot pentru conductă din cupru sau polietilenă
Detentor escuadra, niquelado, conexión adaptador Standard RBM para tubo de cobre, polietileno y multicapa
Rücklaufverschraubung zur Einstellung Winkel für Kupfer- oder Polyethylenrohr

Code	Size	Kv (m³/h)	Pack	Carton
29.03.00	G 3/8"	3,2	10	100
29.03.10	G 3/8" Ø 18 (*)	3,2	10	10
29.04.00	G 1/2"	4,0	10	100
29.04.10	G 1/2" Ø 18 (*)	4,0	10	10

(*): Can be fed by Ø18 copper pipes (kit lockshield + reduction code 57.18.00)

Technical drawing on page 211

Use fittings with Standard RBM thread (see pg. 180) for pipe connection.

009

30



Straight lockshield shut-off and regulating valve for copper or polyethylene pipe.

Nickel brass body.
Elastomer seals.
Shockproof ABS cap.
Threaded straight M standard RBM connection for copper, polyethylene, multi-layer pipe fittings.
Connection to threaded terminal M UNI-EN-ISO 228 with pre-gasket ogive in PTFE.

- Max operating temperature 110 °C
- Max operating pressure 10 Bar

Straight lockshield regulating valve for copper or polyethylene pipe
Détendeur de régulation droit pour tube cuivre ou polyéthylène
Прямой настроечный клапан для медных и полиэтиленовых труб
Acționator de reglare drept pentru conductă din cupru sau polietilenă
Detentor recto, niquelado, conexión adaptador Standard RBM para tubo de cobre, polietileno y multicapa
Rücklaufverschraubung zur Einstellung gerade für Kupfer- oder Polyethylenrohr

Code	Size	Kv (m^3/h)	Pack	Carton
30.03.00	G 3/8"	1,4	10	100
30.03.10	G 3/8" Ø 18 (*)	1,4	10	10
30.04.00	G 1/2"	1,8	10	100
30.04.10	G 1/2" Ø 18 (*)	1,8	10	10

(*): Can be fed by Ø18 copper pipes (kit lockshield + reduction code 57.18.00)

Technical drawing on page 212

Use fittings with Standard RBM thread (see pg. 180) for pipe connection.

009

151



Angle valve with double seal O-ring for "jet-line" series iron pipe.

Nickel brass body.
Elastomer seals.
Shockproof ABS handwheel.
Threaded angled connection F UNI-EN-ISO 228 for iron pipe fittings.
Connection to threaded terminal M UNI-EN-ISO 228 (with pre-gasket ogive in PTFE series *).

- Max operating temperature 110 °C
- Max operating pressure 10 Bar

jet-line

Double seal O.R. angle valve for iron pipe - RFS seal on radiator*
*Robinet coudé à double étanchéité O.R. pour tube métal - Étanchéité RFS sur le radiateur**
*Угловой клапан с двойным уплотнительным кольцом OR для железных труб - Система быстрого монтажа RFS**
*Supapă cu cot cu dublă etanșare o.r. pentru conductă din fier – Garnitură RFS pe radiator**
*Válvula manual escuadra Jet-Line, conexión para tubo de hierro y autojunta RFS**
*Eckventil mit doppelter OR-Dichtung für Eisenrohr - Dichtung RFS auf Heizkörper**

Code	Size	Pack	Carton
151.03.00	RFS 3/8"	10	100
151.04.00	RFS 1/2"	10	100

Angle valve with double seal o-ring for iron pipe
Robinet coudé à double étanchéité O.R. pour tube métal
Угловой клапан с двойным уплотнительным кольцом для железных труб
Supapă cu cot cu dublă etanșare o.r. pentru conductă din fier
Válvula manual escuadra Jet-Line, conexión para tubo de hierro
Ventil mit doppelter OR-Dichtung für Eisenrohr

Code	Size	Pack	Carton
151.03.40	3/8"	10	100
151.04.40	1/2"	10	100
151.05.40	3/4"	10	100

Thread MF UNI-EN-ISO 228

038

152



Straight valve with double seal O-ring for "jet-line" series iron pipe.

Nickel brass body.
Elastomer seals.
Shockproof ABS handwheel.
Threaded straight connection F UNI-EN-ISO 228 for iron pipe fittings.
Connection to threaded terminal M UNI-EN-ISO 228 (with pre-gasket ogive in PTFE series *).

- Max operating temperature 110 °C
- Max operating pressure 10 Bar

jet-line

Double seal O.R. straight valve for iron pipe - RFS seal on radiator*
*Robinet droit à double étanchéité O.R. pour tube métal - Étanchéité RFS sur le radiateur**
*Прямой настроечный клапан с двойным уплотнительным кольцом OR для железных труб - Система быстрого монтажа RFS**
*Supapă dreaptă cu dublă etanșare o.r. pentru conductă din fier – Garnitură RFS pe radiator**
*Válvula manual recta Jet-Line, conexión para tubo de hierro y autojunta RFS**
*Gerades Ventil mit doppelter OR-Dichtung für Eisenrohr - Dichtung RFS auf Heizkörper**

Code	Size	Pack	Carton
152.03.00	RFS 3/8"	10	100
152.04.00	RFS 1/2"	10	100

Straight valve with double seal o-ring for iron pipe
Robinet droit à double étanchéité O.R. pour tube métal
Прямой клапан с двойным уплотнительным кольцом для железных труб
Supapă dreaptă cu dublă etanșare o.r. pentru conductă din fier
Válvula manual recta Jet-Line, conexión para tubo de hierro
Ventil mit OR-Dichtung gerade für Eisenrohr

Code	Size	Pack	Carton
152.03.40	3/8"	10	100
152.04.40	1/2"	10	100
152.05.40	3/4"	10	100

Thread MF UNI-EN-ISO 228

038

153



Angle lockshield regulating valve for “jet-line” series iron pipe.

Nickel brass body.
Elastomer seals.
Shockproof ABS handwheel.
Threaded angled connection F UNI-EN-ISO 228 for iron pipe fittings.
Connection to threaded terminal M UNI-EN-ISO 228 (with pre-gasket ogive in PTFE series *).

- Max operating temperature 110 °C
- Max operating pressure 10 Bar

jet-line

Angle lockshield regulating valve for iron pipe - RFS seal on radiator*
*Détendeur de réglage coudé pour tube métal - Étanchéité RFS sur le radiateur**
*Угловой настроечный клапан для железных труб - Система быстрого монтажа RFS**
*Acționator de reglare cu cot pentru conductă din fier – Garnitură RFS pe radiator**
*Detentor escuadra Jet-Line, conexión para tubo de hierro y autojunta RFS**
*Rücklaufverschraubung zur Einstellung gewinkelt für Eisenrohr - Dichtung RFS auf Heizkörper**

Code	Size	Pack	Carton
153.03.00	RFS 3/8”	10	100
153.04.00	RFS 1/2”	10	100

Angle lockshield regulating valve for iron pipe
Détendeur de réglage coudé pour tube métal
Угловой настроечный клапан для железных труб
Acționator de reglare cu cot pentru conductă din fier
Detentor escuadra Jet-Line, conexión para tubo de hierro
Rücklaufverschraubung zur Einstellung Winkel für Eisenrohr

Code	Size	Pack	Carton
153.03.40	3/8”	10	100
153.04.40	1/2”	10	100
153.05.40	3/4”	10	100

Thread MF UNI-EN-ISO 228

038

154



Straight lockshield regulating valve for “jet-line” series iron pipe.

Nickel brass body.
Elastomer seals.
Shockproof ABS handwheel.
Threaded straight connection F UNI-EN-ISO 228 for iron pipe fittings.
Connection to threaded terminal M UNI-EN-ISO 228 (with pre-gasket ogive in PTFE series *).

- Max operating temperature 110 °C
- Max operating pressure 10 Bar

jet-line

Straight lockshield regulating valve for iron pipe - RFS seal on radiator*
*Détendeur de réglage droit pour tube métal - Étanchéité RFS sur le radiateur**
*Прямой настроечный клапан с двойным уплотнительным кольцом OR для железных труб - Система быстрого монтажа RFS**
*Acționator de reglare drept pentru conductă din fier – Garnitură RFS pe radiator**
*Detentor recto Jet-Line, conexión para tubo de hierro y autojunta RFS**
*Rücklaufverschraubung zur Einstellung gerade für Eisenrohr - Dichtung RFS auf Heizkörper**

Code	Size	Pack	Carton
154.03.00	RFS 3/8”	10	100
154.04.00	RFS 1/2”	10	100

Straight lockshield regulating valve for iron pipe
Détendeur de régulation droit pour tube métal
Прямой настроечный клапан для железных труб
Acționator de reglare drept pentru conductă din fier
Detentor recto, niquelado, conexión para tubo de hierro
Rücklaufverschraubung zur Einstellung gerade für Eisenrohr

Code	Size	Pack	Carton
154.03.40	3/8”	10	100
154.04.40	1/2”	10	100
154.05.40	3/4”	10	100

Thread MF UNI-EN-ISO 228

038

587



Angle valve with double seal O-ring for copper or polyethylene pipe, standard rbm connection, "jet-line" series.

Nickel brass body.
Elastomer seals.
Shockproof ABS handwheel.
Threaded angled standard RBM connection for copper, polyethylene, multi-layer pipe fittings.
Connection to threaded terminal M UNI-EN-ISO 228 (with pre-gasket ogive in PTFE series *).

- Max operating temperature 110 °C
- Max operating pressure 10 Bar

jet-line

Use fittings with Standard RBM thread (see pg. 180) for pipe connection.

Angle valve with double O.R. seal for copper or polyethylene pipe, RFS seal on radiator*
*Vanne coudée à double étanchéité O.R. pour tube en cuivre ou polyéthylène Garniture RFS sur le radiateur**
*Угловой клапан с двойным уплотнительным кольцом для медных или полиэтиленовых труб. Уплотнитель RFS на радиаторе**
*Robinet de colț cu garnitură de etanșare dublă O.R. pentru tub din cupru sau polietilenă. Garnitură RFS pe radiator**
*Válvula de ángulo de doble retención O.R. para tubo de cobre o de polietileno Retención RFS en el radiador**
*Eckventil mit doppelter OR-Dichtung für Kupfer- oder Polyethylenrohr Dichtung RFS auf Heizkörper**

Code	Size	Pack	Carton
587.03.00	RFS 3/8"	10	100
587.04.00	RFS 1/2"	10	100

Angle valve with double O.R. seal for copper or polyethylene pipe
Vanne coudée à double étanchéité O.R. pour tube en cuivre ou polyéthylène
Угловой клапан с двойным уплотнительным кольцом для медных или полиэтиленовых труб
Robinet de colț cu garnitură de etanșare dublă O.R. pentru tub din cupru sau polietilenă
Válvula de ángulo de doble retención O.R. para tubo de cobre o de polietileno
Eckventil mit doppelter OR-Dichtung für Kupfer- oder Polyethylenrohr

Code	Size	Pack	Carton
587.03.40	RBM 3/8"	10	100
587.04.40	RBM 1/2"	10	100

System side standard RBM thread W 24.5x19F

038

588



Straight valve with double seal O-ring for copper or polyethylene pipe, standard rbm connection,"jet-line" series.

Nickel brass body.
Elastomer seals.
Shockproof ABS handwheel.
Threaded straight standard RBM connection for copper, polyethylene, multi-layer pipe fittings.
Connection to threaded terminal M UNI-EN-ISO 228 (with pre-gasket ogive in PTFE series *).

- Max operating temperature 110 °C
- Max operating pressure 10 Bar

jet-line

Use fittings with Standard RBM thread (see pg. 180) for pipe connection.

Straight valve with double O.R. seal for copper or polyethylene pipe - RFS seal on radiator*
*Robinet droite à double étanchéité O.R. pour tube en cuivre ou polyéthylène Étanchéité RFS sur le radiateur**
*Прямой клапан с двойным уплотнительным кольцом OR для медных и полиэтиленовых труб - Система быстрого монтажа RFS**
*Supapă dreaptă cu dublă etanșare o.r. pentru conductă din cupru sau polietilenă – Garnitură RFS pe radiator**
*Válvula manual recta Jet-Line, conexión adaptador Standar RBM para tubo de cobre, polietileno y multicapa y autojunta RFS**
*Gerades Ventil mit doppelter OR-Dichtung für Kupfer- oder Polyethylenrohr - Dichtung RFS auf Heizkörper**

Code	Size	Pack	Carton
588.03.00	RFS 3/8"	10	100
588.04.00	RFS 1/2"	10	100

Straight valve with double seal o-ring for copper or polyethylene pipe
Robinet droite à double étanchéité O.R. pour tube en cuivre ou polyéthylène
Прямой клапан с двойным уплотнительным кольцом OR для медных и полиэтиленовых труб
Supapă dreaptă cu dublă etanșare o.r. pentru conductă din cupru sau polietilenă
Válvula manual recta Jet-Line, conexión adaptador Standard RBM para tubo de cobre, polietileno y multicapa
Gerades Ventil mit doppelter OR-Dichtung für Kupfer- oder Polyethylenrohr

Code	Size	Pack	Carton
588.03.40	RBM 3/8"	10	100
588.04.40	RBM 1/2"	10	100

System side standard RBM thread W 24.5x19F

038

564



Angle lockshield regulating valve for copper or polyethylene pipe, standard rbm connection, "jet-line" series.

Nickel brass body.
Elastomer seals.
Shockproof ABS handwheel.
Threaded angled standard RBM connection for copper, polyethylene, multi-layer pipe fittings.
Connection to threaded terminal M UNI-EN-ISO 228 (with pre-gasket ogive in PTFE series *).

- Max operating temperature 110 °C
- Max operating pressure 10 Bar

jet-line

Use fittings with Standard RBM thread (see pg. 180) for pipe connection.

Angle lockshield regulating valve for copper or polyethylene pipe - RFS seal on radiator*
*Détendeur de réglage coudé pour tube en cuivre ou polyéthylène Étanchéité RFS sur le radiateur**
*Угловой настроечный клапан для медных или полиэтиленовых труб - Система быстрого монтажа RFS**
*Acționator de reglare cu cot pentru conductă din cupru sau polietilenă – Garnitură RFS pe radiator**
*Detentor escuadra Jet-Line, conexión adaptador Standar RBM para tubo de cobre, polietileno y multicapa y autojunta RFS**
*Rücklaufverschraubung zur Einstellung gewinkelt für Kupfer- oder Polyethylenrohr - Dichtung RFS auf Heizkörper**

Code	Size	Pack	Carton
564.03.00	RFS 3/8"	10	100
564.04.00	RFS 1/2"	10	100

Angle lockshield regulating valve for copper or polyethylene pipe
Détendeur de régulation coudé pour tube cuivre ou polyéthylène
Угловой настроечный клапан для медных и полиэтиленовых труб
Acționator de reglare cu cot pentru conductă din cupru sau polietilenă
Detentor escuadra, niquelado, conexión adaptador Standard RBM para tubo de cobre, polietileno y multicapa
Rücklaufverschraubung zur Einstellung Winkel für Kupfer- oder Polyethylenrohr

Code	Size	Pack	Carton
564.03.40	RBM 3/8"	10	100
564.04.40	RBM 1/2"	10	100

System side standard RBM thread W 24.5x19F

038

565



Straight lockshield regulating valve for copper or polyethylene pipe, standard rbm connection, "jet-line" series.

Nickel brass body.
Elastomer seals.
Shockproof ABS handwheel.
Threaded straight standard RBM connection for copper, polyethylene, multi-layer pipe fittings.
Connection to threaded terminal M UNI-EN-ISO 228 (with pre-gasket ogive in PTFE series *).

- Max operating temperature 110 °C
- Max operating pressure 10 Bar

jet-line

Use fittings with Standard RBM thread (see pg. 180) for pipe connection.

Straight lockshield regulating valve for copper or polyethylene pipe - RFS seal on radiator*
*Détendeur de réglage droit pour tube en cuivre ou polyéthylène Étanchéité RFS sur le radiateur**
*Прямой настроечный клапан для медных или полиэтиленовых труб - Система быстрого монтажа RFS**
*Acționator de reglare drept pentru conductă din cupru sau polietilenă – Garnitură RFS pe radiator**
*Detentor recto Jet-Line, conexión adaptador Standar RBM para tubo de cobre, polietileno y multicapa y autojunta RFS**
*Rücklaufverschraubung zur Einstellung gerade für Kupfer- oder Polyethylenrohr - Dichtung RFS auf Heizkörper**

Code	Size	Pack	Carton
565.03.00	RFS 3/8"	10	100
565.04.00	RFS 1/2"	10	100

Straight lockshield regulating valve for copper or polyethylene pipe
Détendeur de régulation droit pour tube cuivre ou polyéthylène
Прямой настроечный клапан для медных и полиэтиленовых труб
Acționator de reglare drept pentru conductă din cupru sau polietilenă
Detentor recto, niquelado, conexión adaptador Standard RBM para tubo de cobre, polietileno y multicapa
Rücklaufverschraubung zur Einstellung gerade für Kupfer- oder Polyethylenrohr

Code	Size	Pack	Carton
565.03.40	RBM 3/8"	10	100
565.04.40	RBM 1/2"	10	100

System side standard RBM thread W 24.5x19F

038

25



"Single flow" 4-way valve for single pipe circuits.

Nickel-plated brass body. Elastomer seals. Shockproof ABS hand wheel. Internal by-pass with fixed leakage. Polymer probe.
Line connections, centre distance 37 mm threaded M standard RBM for copper, polyethylene and multilayer pipe fittings.
Connection to the radiator threaded M UNI-EN-ISO 228.

- Max operating temperature 110 °C
- Max operating pressure 10 Bar
- Probe length 300 mm
- Probe outside diameter 15 mm

Technical drawing on page 212

Use fittings with Standard RBM thread (see pg. 180) for pipe connection.

4-way valve for single pipe circuits
Robinet à 4 voies pour installations monotube
Четырёхходовой клапан для однотрубных систем
Supapă cu 4 canale pentru instalații cu o singură conductă
Válvula monotubo manual "Monoflusso", niquelada, conexiones para adaptador Standard RBM para tubo de cobre, polietileno y multicapa
4-Wege Ventil für Einzelrohranlagen

Code	Size	Model	Pack	Carton
25.05.00	G 3/4"	Single flow	5	20
25.05.10	G 3/4" Ø 18 (*)	Single flow	5	20
25.05.50	G 3/4" SX (**)	Single flow	5	20
25.06.00	G 1"	Single flow	5	20
25.06.10	G 1" Ø 18 (*)	Single flow	5	20
25.06.50	G 1" SX (**)	Single flow	5	20

(*): Can be fed by Ø18 copper pipes (kit valve + reduction code 57.18.00)
(**): Left thread radiator connection

010

22



"Uniflux" 4-way valve for single pipe circuits.

Nickel-plated brass body. Elastomer seals. Shockproof ABS hand wheel. Internal by-pass with fixed leakage. Polymer probe.
Line connections, centre distance 37 mm threaded M standard RBM for copper, polyethylene and multilayer pipe fittings.
Connection to the radiator threaded M UNI-EN-ISO 228.

- Max operating temperature 110 °C
- Max operating pressure 10 Bar
- Probe length 300 mm
- 1/2" probe outside diameter 10 mm
- 3/4" probe outside diameter 13 mm

Technical drawing on page 213

Use fittings with Standard RBM thread (see pg. 180) for pipe connection.

4-way valve for single pipe circuits
Robinet à 4 voies pour installations monotube
Четырёхходовой клапан для однотрубных систем
Supapă cu 4 canale pentru instalații cu o singură conductă
Válvula monotubo manual "Monoflusso", niquelada, conexiones para adaptador Standard RBM para tubo de cobre, polietileno y multicapa
4-Wege Ventil für Einzelrohranlagen

Code	Size	Model	Pack	Carton
22.04.00	G 1/2"	Uniflux	5	20
22.04.20	G 1/2"	Uniflux s.c.	5	20
22.05.00	G 3/4"	Uniflux	5	20
22.05.30	G 3/4" Ø 18 (*)	Uniflux	5	20

(*): Can be fed by Ø18 copper pipes (kit valve + reduction code 57.18.00)

010

585



"Biflux" 4-way valve for single pipe circuits.

Nickel brass body.
Elastomer seals.
Shockproof ABS handwheel.
Internal bypass with fixed leakage.
Polymer probe.
In-line connections, centre distance 37 mm M standard RBM thread for copper, polyethylene and multilayer pipe fittings.
Threaded radiator connection M UNI-EN-ISO 228.

- Max operating temperature 110 °C
- Max operating pressure 10 Bar
- Probe length 100 mm
- Probe outside diameter 11 mm

4-way valve for single pipe circuits
Robinet à 4 voies pour installations monotube
Четырёхходовой клапан для однотрубных систем
Supapă cu 4 canale pentru instalații cu o singură conductă
Válvula monotubo manual "Monoflusso", niquelada, conexiones para adaptador Standard RBM para tubo de cobre, polietileno y multicapa
4-Wege Ventil für Einzelrohranlagen

Code	Size	Model	Pack	Carton
585.04.00	G 1/2"	Biflux	5	20
585.04.10	G 1/2" Ø 18 (*)	Biflux	5	20
585.05.00	G 3/4"	Biflux	5	20
585.05.10	G 3/4" Ø 18 (*)	Biflux	5	20

(*): Can be fed by Ø18 copper pipes (kit valve + reduction code 57.18.00)

Technical drawing on page 212

Use fittings with Standard RBM thread (see pg. 180) for pipe connection.

010

1028



"Termoflux" 4-way thermostatically controlled valve for single pipe circuits.

Nickel brass body.
Built-in micrometric lockshield valve.
Elastomer seals.
Shockproof ABS cap and handwheel.
Polymer probe.
In-line connections, centre distance 37 mm M standard RBM thread for copper, polyethylene and multilayer pipe fittings.
Threaded radiator connection M UNI-EN-ISO 228.

- Max operating temperature 110 °C
- Max operating pressure 10 Bar
- Probe length 295 mm
- 1/2" probe outside diameter 10 mm
- 3/4" probe outside diameter 13 mm

4-way valve with thermostatic option for single pipe circuits
Robinet à 4 voies thermostatique pour installations monotube
Терморегулирующий четырёхходовой клапан для однотрубных систем
Robinet termostatic cu 4 căi pentru instalații cu una sau două conducte
Válvula monotubo termostatizable "Termoflux", niquelada, conexiones para adaptador Standard RBM para tubo de cobre, polietileno y multicapa
Thermostierbares 4-Wege-Ventil für Einzelrohranlagen

Code	Size	Model	Pack	Carton
1028.04.00	G 1/2"	Termoflux	4	16
1028.05.00	G 3/4"	Termoflux	4	16

Technical drawing on page 213

Use fittings with Standard RBM thread (see pg. 180) for pipe connection.

010

3101



4-way valve with thermostatic option with variable centre distance and pre-setting, for single pipe and dual pipe circuits.

Nickel brass body.
Built-in micrometric lockshield valve.
Elastomer seals.
Shockproof ABS cap and handwheel.
Polymer probe.
In-line connections, variable centre distance 35 ÷ 40 mm M standard RBM thread for copper, polyethylene and multilayer pipe fittings.
Threaded radiator connection M UNI-EN-ISO 228.

- Max operating temperature 110 °C
- Max operating pressure 10 Bar
- Probe length 110/300 mm
- Probe outside diameter 11 mm

Technical drawing on page 212

Valve with thermostatic option and pre-setting.

Use fittings with Standard RBM thread (see pg. 180) for pipe connection.
Use spanner code 2878.00.00 (see page 118) to adjust Kvs values.

4-way valve with thermostatic option with variable centre distance and pre-setting. For single pipe and dual pipe systems
Robinet à 4 voies thermostatiques à entraxe variable avec préréglage pour installations bitube et monotube
ходовой терморегулирующий клапан с переменным межосевым расстоянием, с предварительной регулировкой для двутрубных-однотрубных систем
Robinet termostatic cu 4 căi cu interax variabil cu reglare prealabilă pentru instalații cu una sau două conducte
Válvula de 4 vías con control de la temperatura a distancia entre ejes variable con prerregulación para instalaciones bitubo - monotubo
Ausrüstbares 4-Wege-Ventil mit variabler Weite mit Voreinstellung für Zwei-Rohr- und Ein-Rohr-Anlagen

Code	Size	Pack	Carton
3101.04.00	G 1/2"	4	16
3101.05.00	G 3/4"	4	16
3101.06.00	G 1"	4	16

010

754



4-way valve with thermostatic option for radiator.

Nickel brass body.
Elastomer seals.
Shockproof ABS cap and handwheel.
Brass probe.
Built-in micrometric lockshield valve.
In-line connections, centre distance 37 mm M standard RBM thread for copper, polyethylene and multilayer pipe fittings.
Threaded connections to radiator M UNI-EN-ISO 228 with pre-gasket ogive in PTFE.

- Max operating temperature 110 °C
- Max operating pressure 10 Bar
- Kv mod. with thermostatic option 1.80 m^3/h
- Kv mod. thermostatic 1.44 m^3/h
- Probe length 300 mm
- Probe outside diameter. 10 mm
- Flow rate at radiator Adjustable bypass

4-way valves with thermostatic option for single pipe - double pipe circuits
Robinet à 4 voies thermostatique pour installations bitube et monotube
Терморегулирующий четырёхходовой клапан для однотрубных и двухтрубных систем
Supapă cu 4 canale cu posibilitate de reglare termostatică pentru instalații cu două - o conductă/e
Válvula monotubo-bitubo termostatizable vertical, niquelada, conexiones para adaptador Standard RBM para tubo de cobre, polietileno y multicapa
Thermostierbares 4-Wege-Ventil für Doppel- und Einzelrohranlagen

Code	Size	Pack	Carton
754.04.00	G 1/2"	4	16

Technical drawing on page 213

For connection to radiators.
Use fittings with Standard RBM thread (see pg. 180) for pipe connection.

010

424



"Uniflux" 4-way valve for single pipe circuits with external probe.

Nickel brass body.
Elastomer seals.
Shockproof ABS handwheel.
Internal bypass with fixed leakage.
In-line connections, centre distance 37 mm M standard RBM thread for copper, polyethylene and multilayer pipe fittings.
Threaded radiator connection M UNI-EN-ISO 228.
Connections for external probe Ø 10 or Ø 15.

- Max operating temperature 110 °C
- Max operating pressure 10 Bar
- Probe not included.

Technical drawing on page 213

Radiator side hot fluid inlet.
Use fittings with Standard RBM thread (see pg. 180) for pipe connection.

Uniflux 4-way valve for single pipe circuits with external probe
Vanne "uniflux" à 4 voies à sonde externe pour installations monotube
Четырёхходовой клапан "uniflux" с внешним зондом для однотрубных систем
Supapă "uniflux" cu 4 canale cu sondă externă pentru instalații cu o singură conductă
Grupo monotubo manual "uniflux", niquelado, conexiones para adaptador Standard RBM para tubo de cobre, polietileno y multicapa
4-Wege-Ventil "Uniflex" mit externer Sonde für Einzelrohranlagen

Code	Size	Model	Pack	Carton
424.04.70	G 1/2"	Uniflux E.P. Ø 10	4	16
424.04.90	G 1/2"	Uniflux E.P. Ø 15	4	16

010

223



Kit for heating units fed by single pipe and double pipe circuits.

Nickel brass body.
Elastomer seals.
Shockproof ABS cap and handwheel.
Built-in micrometric lockshield valve.
Internal bypass with 50% bore only for single pipe applications.
In-line connections, centre distance 37 mm M standard RBM thread for copper, polyethylene and multilayer pipe fittings.
Connections for external probe Ø 15 mm.
Threaded connections to terminal M UNI-EN-ISO 228 with pre-gasket ogive in PTFE.

- Max operating temperature 110 °C
- Max operating pressure 10 Bar
- Probe not included.

Kit including diverter valve + thermostatically controlled 1/2" straight valve for single- and double-pipe systems
Kit vanne de déviation + vanne thermostatique droite de 1/2" pour installations monotube et bitube
Комплект распределительный + терморегулирующий прямой клапан 1/2" для двухтрубных и однотрубных систем
Kit robinet deviator + robinet termostatizabil drept de 1/2" pentru instalații cu unul sau două tuburi
Kit desviadora + termostatizable recta de 1/2" para instalaciones monotubo y bitubo
Verzweigerbausatz + thermostabilisierbar gerade zu 1/2" für Einzel- und Doppelrohranlagen

Code	Size	Model	Pack	Carton
223.04.50	G 1/2"	Kit 50%*	1	10
223.04.00	G 1/2"	Kit 100%**	1	10

** Single pipe circuits*
***Double pipe circuits*

Technical drawing on page 213

Floor or baseboard distribution in-line power supply connections.
Use fittings with Standard RBM thread (see pg. 180) for pipe connection.

010

225



Kit for heating units fed by single pipe and double pipe circuits.

Nickel brass body.
Elastomer seals.
Shockproof ABS cap and handwheel.
Built-in micrometric lockshield valve.
Internal bypass with 50% bore only for single pipe applications.
In-line connections, centre distance 37 mm M standard RBM thread for copper, polyethylene and multilayer pipe fittings.
Connections for external probe Ø 15 mm.
Threaded connections to terminal M UNI-EN-ISO 228 with pre-gasket ogive in PTFE.

- Max operating temperature 110 °C
- Max operating pressure 10 Bar
- Probe not included.

Kit including diverter valve + thermostatically controlled 1/2" reverse valve for single- and double-pipe systems
Kit vanne de déviation + vanne thermostatique inverse de 1/2" pour installations monotube et bitube
Комплект распределительный + терморегулирующий обратный клапан 1/2" для двухтрубных и однотрубных систем
Kit robinet deviator + robinet termostatizabil de 1/2" pentru instalații cu unul sau două tuburi
Kit desviadora + termostatizable inversa de 1/2" para instalaciones monotubo y bitubo
Verzweigerbausatz + thermostabilisierbar Umkehrung zu 1/2" für Einzel- und Doppelrohranlagen

Code	Size	Model	Pack	Carton
225.04.50	G 1/2"	Kit 50%*	1	10
225.04.00	G 1/2"	Kit 100%**	1	10

** Single pipe circuits*
***Double pipe circuits*

Technical drawing on page 214

Floor or baseboard distribution in-line power supply connections.
Use fittings with Standard RBM thread (see pg. 180) for pipe connection.

010

249



Kit for heating units fed by single pipe and double pipe circuits.

Nickel brass body.
Elastomer seals.
Shockproof ABS cap and handwheel.
Built-in micrometric lockshield valve.
Internal bypass with 50% bore only for single pipe applications.
In-line connections, centre distance 37 mm M standard RBM thread for copper, polyethylene and multilayer pipe fittings.
Connections for external probe Ø 15 mm.
Threaded connections to terminal M
UNI-EN-ISO 228 with pre-gasket ogive in PTFE.

- Max operating temperature 110 °C
- Max operating pressure 10 Bar
- Probe not included.

Kit including diverter valve + 1/2" manual angle valve for single- and double-pipe systems
Kit vanne de déviation + vanne coudée manuelle de 1/2'' pour installations monotube et bitube
Комплект распределительный + ручной угловой клапан 1/2" для двухтрубных и однотрубных систем
Kit robinet deviator + robinet de colț manual de 1/2" pentru instalații cu unul sau două tuburi
Kit desviadora + válvula de ángulo manual de 1/2" para instalaciones monotubo y bitubo
Verzweigerbausatz + manuelles Ventil gewinkelt zu 1/2" für Einzel- und Doppelrohranlagen

Code	Size	Model	Pack	Carton
249.04.50	G 1/2"	Kit 50%*	1	10
249.04.00	G 1/2"	Kit 100%**	1	10

** Single pipe circuits*
*** Double pipe circuits*

Technical drawing on page 214

Floor or baseboard distribution in-line power supply connections.
Use fittings with Standard RBM thread (see pg. 180) for pipe connection.

010

211



Kit for heating units fed by single pipe and double pipe circuits.

Nickel brass body.
Elastomer seals.
Shockproof ABS cap and handwheel.
Built-in micrometric lockshield valve.
Internal bypass with 50% bore only for single pipe applications.
Angle connections, centre distance 37 mm M standard RBM thread for copper, polyethylene and multilayer pipe fittings.
Connections for external probe Ø 15 mm.
Threaded connections to terminal M
UNI-EN-ISO 228 with pre-gasket ogive in PTFE.

- Max operating temperature 110 °C
- Max operating pressure 10 Bar
- Probe not included.

Kit including angle diverter valve + thermostatically controlled 1/2" straight valve for single- and double-pipe systems
Kit vanne de déviation coudée + vanne thermostatique droite de 1/2'' pour installations monotube et bitube
Комплект угловой распределительный + терморегулирующий прямой клапан 1/2" для двухтрубных и однотрубных систем
Kit robinet deviator de colț + robinet termostatizabil drept de 1/2" pentru instalații cu unul sau două tuburi
Kit desviadora de ángulo + termostatizable recta de 1/2" para instalaciones monotubo y bitubo
Verzweigerbausatz Winkel + thermostabilisierbar gerade zu 1/2" für Einzel- und Doppelrohranlagen

Code	Size	Model	Pack	Carton
211.04.50	G 1/2"	Kit 50%*	1	10
211.04.00	G 1/2"	Kit 100%**	1	10

** Single pipe circuits*
*** Double pipe circuits*

Technical drawing on page 214

Angle connections fed from wall.
Use fittings with Standard RBM thread (see pg. 180) for pipe connection.

010

213



Kit for heating units fed by single pipe and double pipe circuits.

Nickel brass body.
Elastomer seals.
Shockproof ABS cap and handwheel.
Built-in micrometric lockshield valve.
Internal bypass with 50% bore only for single pipe applications.
Angle connections, centre distance 37 mm M standard RBM thread for copper, polyethylene and multilayer pipe fittings.
Connections for external probe Ø 15 mm.
Threaded connections to terminal M
UNI-EN-ISO 228 with pre-gasket ogive in PTFE.

- Max operating temperature 110 °C
- Max operating pressure 10 Bar
- Probe not included.

Kit including angle diverter valve + thermostatically controlled 1/2" reverse valve for single- and double-pipe systems
Kit vanne de déviation coudée + vanne thermostatique inverse de 1/2" pour installations monotube et bitube
Комплект угловой распределительный + терморегулирующий обратный клапан 1/2" для двухтрубных и однотрубных систем
Kit robinet deviator de colț + robinet termostatizabil invers de 1/2" pentru instalații cu unul sau două tuburi
Kit desviadora de ángulo + termostatizable inversa de 1/2" para instalaciones monotubo y bitubo
Verzweigerbausatz Winkel + thermostabilisierbares Umkehrung zu 1/2 für Einzel- und Doppelrohranlagen

Code	Size	Model	Pack	Carton
213.04.50	G 1/2"	Kit 50%*	1	10
213.04.00	G 1/2"	Kit 100%**	1	10

** Single pipe circuits*
***Double pipe circuits*

Technical drawing on page 214

Angle connections fed from wall.
Use fittings with Standard RBM thread (see pg. 180) for pipe connection.

010

212



Kit for heating units fed by single pipe and double pipe circuits.

Nickel brass body.
Elastomer seals.
Shockproof ABS cap and handwheel.
Built-in micrometric lockshield valve.
Internal bypass with 50% bore only for single pipe applications.
Angle connections, centre distance 37 mm M standard RBM thread for copper, polyethylene and multilayer pipe fittings.
Connections for external probe Ø 15 mm.
Threaded connections to terminal M
UNI-EN-ISO 228 with pre-gasket ogive in PTFE.

- Max operating temperature 110 °C
- Max operating pressure 10 Bar
- Probe not included.

Kit including diverter angle valve + 1/2" manual angle valve for single- and double-pipe systems
Kit vanne de déviation coudée + vanne coudée manuelle de 1/2" pour installations monotube et bitube
Комплект угловой распределительный + ручной угловой клапан 1/2" для двухтрубных и однотрубных систем
Kit robinet deviator de colț + robinet de colț manual de 1/2" pentru instalații cu unul sau două tuburi
Kit desviadora de ángulo + válvula de ángulo manual de 1/2" para instalaciones monotubo y bitubo
Verzweigerbausatz Winkel + manuelles Ventil gewinkelt zu 1/2" für Einzel- und Doppelrohranlagen

Code	Size	Model	Pack	Carton
212.04.50	G 1/2"	Kit 50%*	1	10
212.04.00	G 1/2"	Kit 100%**	1	10

** Single pipe circuits*
***Double pipe circuits*

Technical drawing on page 215

Angle connections fed from wall.
Use fittings with Standard RBM thread (see pg. 180) for pipe connection.

010

165



Straight 4-way diverter valve for single pipe and the double pipe circuits.

Nickel brass body.
Elastomer seals.
Shockproof ABS cap.
Built-in micrometric lockshield valve.
Internal bypass with 50% bore only for single pipe applications.
In-line connections, centre distance 37 mm M standard RBM thread for copper, polyethylene and multilayer pipe fittings.
Threaded connections to radiator M UNI-EN-ISO 228 with pre-gasket ogive in PTFE.
Connection for external probe Ø 15 mm.

- Max operating temperature 110 °C
- Max operating pressure 10 Bar

Technical drawing on page 215

Use fittings with Standard RBM thread (see pg. 180) for pipe connection.

4-way straight diverter valve for single pipe and double pipe circuits
Vanne déviatrice à 4 voies droite pour installations monotube et bitube
Прямой узел нижнего подключения с четырьмя выходами для однотрубных и двухтрубных систем
Supapă deviatoare cu 4 canale directă pentru instalații cu o singură/două conductă/e
Válvula monotubo-bitubo termostatizable recta, niquelada, conexiones para adaptador Standard RBM para tubo de cobre, polietileno y multicapa
4-Wege-Verzwigerventil gerade für Einzel- und Doppelrohranlagen

Code	Size	Model	Pack	Carton
165.04.50	G 1/2"	50%*	10	10
160.04.00	G 1/2"	100%**	10	10

** Single pipe circuits*
***Double pipe circuits*

010

214



Angle 4-way diverter valve for single pipe and the double pipe circuits.

Nickel brass body.
Elastomer seals.
Shockproof ABS cap.
Built-in micrometric lockshield valve.
Internal bypass with 50% bore only for single pipe applications.
Angle connections, centre distance 37 mm M standard RBM thread for copper, polyethylene and multilayer pipe fittings.
Threaded connections to radiator M UNI-EN-ISO 228 with pre-gasket ogive in PTFE.
Connection for external probe Ø 15 mm.

- Max operating temperature 110 °C
- Max operating pressure 10 Bar

Technical drawing on page 215

Use fittings with Standard RBM thread (see pg. 180) for pipe connection.

4-way angle diverter valve for single pipe and double pipe circuits
Vanne déviatrice à 4 voies en angle pour installations monotube et bitube
Угловой узел нижнего подключения с четырьмя выходами для однотрубных и двухтрубных систем
Supapă deviatoare cu 4 canale cu cot pentru instalații cu o singură/două conductă/e
Válvula monotubo-bitubo termostatizable escuadra, niquelada, conexiones para adaptador Standard RBM para tubo de cobre, polietileno y multicapa
4-Wege-Verzwigerventil gewinkelt für Einzel- und Doppelrohranlagen

Code	Size	Model	Pack	Carton
214.04.50	G 1/2"	50%*	10	10
214.04.00	G 1/2"	100%**	10	10

** Single pipe circuits*
***Double pipe circuits*

010

177



Elbow fitting for valve-pipe connection.

Nickel brass body.
Elastomer seals.
Threaded pipe connection M standard RBM for copper, polyethylene and multilayer pipe fittings.
Connection to valve with RBM standard F threaded fitting

- Max operating temperature 110 °C
- Max operating pressure 10 Bar

Elbow fitting for valve-pipe connection
Raccord coudé pour raccordement robinet-tube
Угловой фитинг для присоединения клапана к трубе
Racord curbat pentru conexiune supapă sistem de conducte
Racor curvo para válvulas de unidades terminales, conexiones para adaptador Standard rbm para tubo de cobre, polietileno y multicapa
Anschlussbogen für Anschluss Rohrleitungsventil

Code	Figure	Centre distance (mm)	Pack	Carton
177.00.00	2	32	20	20
177.00.10	1	60	20	20

Technical drawing on page 215

For distribution outside of baseboard.
Valve-pipe connection.
Use fittings with Standard RBM thread (see pg. 180) for pipe connection.

041

700



Elbow fitting for valve-pipe connection.

Nickel plated copper body.
Pipe side fitting in nickel plated brass.
Threaded pipe connection M standard RBM for copper, polyethylene and multilayer pipe fittings (excluding fitting).
Valve side connection for compression fittings ø 14 mm (excluding fitting).
Valve-connection centre distance 50mm.

- Max operating temperature 110 °C
- Max operating pressure 10 Bar

Elbow fitting for valve-pipe connection
Raccord coudé pour raccordement robinet-tube
Угловой фитинг для присоединения клапана к трубе
Racord curbat pentru conexiune supapă sistem de conducte
Racor curvo para válvulas de unidades terminales, conexiones para adaptador Standard rbm para tubo de cobre, polietileno y multicapa
Anschlussbogen für Anschluss Rohrleitungsventil

Code	Size A	Size B	Pack	Carton
700.14.00	RBM 50	Ø 14	15	15

Suitable for valve-pipe connection with connections located behind radiator.

041

308



Single hole plastic openable washer.

Application flush with the wall for aesthetic closure of pipe passage hole.

- Washer outside diameter 60 mm

Single hole washer
Rondelle mono-trou
Декоративная чашка
Rozetă cu un singur orificiu
Florón simple Ø60mm, en plástico
Einloch-Unterlegscheibe

Code	Size	Pack	Carton
308.10.02	Ø 10	100	100
308.12.02	Ø 12	100	100
308.14.02	Ø 14	100	100
308.16.02	Ø 16	100	100
308.18.02	Ø 18	100	100
308.00.12	U	100	100

U = Universal

041

308

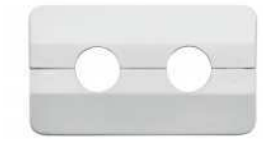

Double hole plastic openable washer.

Application flush with the wall for aesthetic closure of pipe passage hole.

- External dimensions 98x48 mm
- Hole centre distance 37 mm

Suitable for all Single flow and Double flow centre distance 37 mm valves.

Double hole washer
Rondelle bi-trou
Декоративная чашка
Rozetă cu două orificii
Florón doble en plástico
Zweiloch-Unterlegscheibe

Code	Size	Pack	Carton
308.00.02	U	50	50

U = Universal

041

175



Nickel plated brass elbow fitting.

- Threaded F standard RBM connection for RBM valves.
- Threaded M connection (UNI-EN-ISO 228) with PTFE pre-gasket ogive.

Elbow fitting
Raccord coudé
Фитинг угловой
Racord curbat
Racor curvo para grupo monotubo-bitubo, conexiones para adaptador Standard RBM para tubo de cobre, polietileno y multicapa
Anschlussbogen

Code	Size	Pack	Carton
175.04.00	RFS 1/2"	20	20

041

310



Chrome plated steel probe with end not countersunk.

- Max operating temperature 110 °C
- Max operating pressure 10 Bar

Chrome plated steel probe
Canne en acier chromé
Зонд из хромированной стали
Sondă din oțel cromată
Tubo en acero cromado para grupo monotubo-bitubo
Sonde aus verchromtem Stahl

Code	ØxL (mm)	Suitable for valve	Pack	Carton
310.10.60	Ø 10 x 600	Uniflux E.P.	1	10
310.10.90	Ø 10 x 900	Uniflux E.P.	1	10
310.10.10	Ø 10 x 1000	Uniflux E.P.	1	10

041

348



Chrome plated steel probe with end not countersunk.

- Max operating temperature 110 °C
- Max operating pressure 10 Bar

Chrome plated steel probe
Canne en acier chromé
Зонд из хромированной стали
Sondă din oțel cromată
Tubo en acero cromado para grupo monotubo-bitubo
Sonde aus verchromtem Stahl

Code	ØxL (mm)	Suitable for valve	Pack	Carton
348.15.60	Ø 15 x 600	Uniflux E.P. kit	35	35
348.15.90	Ø 15 x 900	Uniflux E.P. kit	35	35
348.15.10	Ø 15 x 1000	Uniflux E.P. kit	35	35

041

312



Brass steel probe with countersunk end.

- Max operating temperature 110 °C
- Max operating pressure 10 Bar

Suitable for 25 series valve.

Brass probe
Canne en laiton
Латунный зонд
Sondă din alamă
Tubo en latón para grupo monotubo-bitubo
Sonde aus Messing

Code	ØxL (mm)	Suitable for valve	Pack	Carton
03121560 *	Ø 15 x 600	Single flow	1	10
03121590 **	Ø 15 x 900	Single flow	1	10

**non-chrome-plated brass probe*
***chrome-plated brass probe*

041

1138



Thermal insulation made up from expanded polyethylene half-bearings with external antiscratch coating.

Half-bearings fixed with double-sided adhesive tape already applied.

- Fire behaviour class1
- Density 33 kg/m^3
- Max operating temperature -40 ÷ +90 °C

Angle valve thermal shell
Coque isolante vannes en angle
Теплоизоляционный кожух для угловых клапанов
Carcasă termică supape cu cot
Aislamiento térmico para válvula a escuadra, en polietileno expandido con revestimiento anticondensación
Wärmeschale Eckventile

Code	Size	Pack	Carton
1138.00.20	3/4"	10	10

Angle lockshield valves thermal shell
Coque isolante détendeurs en angle
Теплоизоляционный кожух для настроечных угловых клапанов
Carcasă termică acționatoare cu cot
Aislamiento térmico para detentor a escuadra, en polietileno expandido con revestimiento anticondensación
Wärmeschale Eckrücklaufverschraubungen

Code	Size	Pack	Carton
1138.00.30	3/4"	10	10

041

301



Coupled valves, only for shut-off of radiant plates, equipped with adjustable bypass, for single pipe circuits.

Nickel brass body.
Elastomer seals.
Euroconus F G3/4"plate side swivel connections.
M G3/4" Euroconus system side connections.
Connections centre distance 50 mm.

- Max operating temperature 110 °C
- Max operating pressure 10 Bar

Use Euroconus fittings with G3/4" thread (see page 188) for pipe connection.

Coupled valve with straight bypass
Corps répartiteurs pour installations monotube droite
Прямой узел нижнего подключения с байпасом
Supapă îmbinată cu by-pass dreaptă
Válvula monotubo recta con by-pass para panel de acero, niquelada, conexión para adaptador Euroconus para tubo de cobre, polietileno y multicapa
Mit Nebenleitung gekoppeltes gerades Ventil

Code	Size	Pack	Carton
301.05.10	3/4"	5	5

Coupled valve with angle bypass
Corps répartiteurs pour installations monotube coudé
Угловой узел нижнего подключения с байпасом
Supapă îmbinată cu by-pass cu cot
Válvula monotubo escuadra con by-pass para panel de acero, niquelada, conexión para adaptador Euroconus para tubo de cobre, polietileno y multicapa
Mit Nebenleitung gekoppeltes gewinkeltes Ventil

Code	Size	Pack	Carton
302.05.10	3/4"	5	5

010

301



Coupled double pipe valves, only for shut-off of radiant plates, for dual pipe circuits.

Nickel brass body.
Elastomer seals.
Euroconus F G3/4"plate side swivel connections.
M G3/4" Euroconus system side connections.
Connections centre distance 50 mm.

- Max operating temperature 110 °C
- Max operating pressure 10 Bar

Use Euroconus fittings with G3/4" thread (see page 188) for pipe connection.

Coupled valve without straight bypass
Corps répartiteurs pour installations bitube droite
Прямой узел нижнего подключения без байпаса
Supapă îmbinată fără by-pass dreaptă
Válvula bitubo recta para panel de acero, niquelada, conexión para adaptador Euroconus para tubo de cobre, polietileno y multicapa
Ohne Nebenleitung gekoppeltes gerades Ventil

Code	Size	Pack	Carton
301.05.80	3/4"	1	50

Coupled valve without angle bypass
Corps répartiteurs pour installations bitube coudé
Угловой узел нижнего подключения без байпаса
Supapă îmbinată fără by-pass cu cot
Válvula bitubo escuadra para panel de acero, niquelada, conexión para adaptador Euroconus para tubo de cobre, polietileno y multicapa
Ojne Nebenleitung gekoppeltes gewinkeltes Ventil

Code	Size	Pack	Carton
302.05.80	3/4"	1	50

010

349



Pair of brass reducing couplings for connecting to radiant plates with F 1/2" connections. Accessories for double- and single-pipe valves.

Brass body.
Elastomer seals.
Euroconus M G3/4" x M 1/2" threaded connections (UNI-ENISO 228).

- Max operating temperature 110 °C
- Max operating pressure 10 Bar

Pair of reductions
Couple de réductions
Пара переходников
Pereche de reducţii
Par reducciones
Reduzierstückpaar

Code	Size A	Size B	Pack	Carton
349.00.00	3/4"	1/2"	1	125

Tapered seal fitting which can be coupled to radiant plate valves series 301.

010


RBM
Brass

DISTRIBUTION MANIFOLDS AND ACCESSORIES

COLLECTEURS DE DITRIBUTION ET ACCESSOIRES

КОЛЛЕКТОРЫ РАСПРЕДЕЛЕНИЯ И КОМПЛЕКТУЮЩИЕ

COLECTOARE DE DISTRIBUȚIE ȘI ACCESORII

COLECTORES DE DISTRIBUCIÓN Y ACCESORIOS

VERTEILER-SAMMELBEHÄLTER UND ZUBEHÖR

MONOBLOCK simple and coplanar manifolds - RBM standard connection junctions	pag. 146	
Simple MONOBLOCK manifolds	pag. 151	
MONOBLOCK manifolds for domestic water systems	pag. 156	
Modular manifolds for sanitary systems	pag. 159	
Accessories for heating and DHW systems	pag. 160	
Valves and accessories for manifolds	pag. 161	
Manifolds kit	pag. 162	

34



Monoblock®

Single modular manifold, with in-line connections and unilateral junctions.

Nickel brass body.
Junction connections, centre distance 37 mm threaded M standard RBM, for copper, polyethylene and multilayer pipe fittings.
Threaded in-line connections MF UNI-EN-ISO 228.

- Max operating temperature 110 °C
- Max operating pressure 10 Bar

Technical drawing on page 216

Use fittings with Standard RBM thread (see pg. 180) for pipe connection.
Please use brackets cod. 129.0X.00 for fixing in plastic boxes or brackets cod. 899.00.00 for fixing in metal boxes.

Module for RBM standard modular simple manifold, male junctions
Module pour collecteur simple modulable dérivations mâle standard RBM
Модуль для простого сборного коллектора с отводами с наружной резьбой стандарта RBM
Modul pentru colector simplu modular, derivații Tată, standard RBM
Módulo para colector simple componible derivaciones macho estándar RBM
Modul für einfachen kombinierbaren Sammelbehälter Steckverzweigungen Standard RBM

Code	Size	Ways	Pack	Carton
34.05.00	G 3/4"	1	10	40
35.05.00	G 3/4"	2	10	40
36.05.00	G 3/4"	3	10	40
34.06.00	G 1"	1	10	40
35.06.00	G 1"	2	10	40
36.06.00	G 1"	3	10	40
35.07.00	G 1"1/4	2	10	40
36.07.00	G 1"1/4	3	10	40

Standard RBM thread W24.5x19F junction side

016

35



Monoblock®

Single modular manifold, with in-line connections and unilateral junctions.

Nickel brass body.
FG1/2" threaded junction connections, centre distance 37 mm, UNI-EN-ISO 228.
Threaded in-line connections MF UNI-EN-ISO 228.

- Max operating temperature 110 °C
- Max operating pressure 10 Bar

Technical drawing on page 216

Please use brackets cod. 129.0X.00 for fixing in plastic boxes or brackets cod. 899.00.00 for fixing in metal boxes.

Module for g1/2" modular simple manifold, female junctions
Module pour collecteur simple modulable dérivations femme g1/2"
Модуль для простого сборного коллектора с отводами с внутренней резьбой g1/2"
Modul pentru colector simplu modular derivații Mamă g1/2"
Módulo para colector simple componible derivaciones hembra g1/2"
Modul für einfachen kombinierbaren Sammelbehälter Aufsteckverzeigungen g1/2"

Code	Size	Ways	Pack	Carton
35.05.40	G 3/4" F	2x1/2"F	10	40
36.05.40	G 3/4" F	3x1/2"F	10	40
35.06.40	G 1" F	2x1/2"F	10	40
36.06.40	G 1" F	3x1/2"F	10	40

Junctions side thread FG1/2"

016

35



Monoblock®
Single modular manifold, with in-line connections and unilateral junctions.

Nickel brass body.
M G1/2" threaded junction connections, centre distance 37 mm, for multilayer pipe fittings.
Threaded in-line connections MF UNI-EN-ISO 228.

- Max operating temperature 110 °C
- Max operating pressure 10 Bar

Technical drawing on page 216

Use series 2796 fittings with G1/2" thread (see page 195) for pipe connection.
Please use brackets cod. 129.0X.00 for fixing in plastic boxes or brackets cod. 899.00.00 for fixing in metal boxes.

Module for modular simple manifold, g1/2" male junctions
Module pour collecteur simple modulable dérivations mâle g1/2"
Модуль для простого сборного коллектора с отводами с наружной резьбой g1/2"
Modul pentru colector simplu modular, derivații tată g1/2"
Módulo para colector simple componible derivaciones macho g1/2"
Modul für einfachen kombinierbaren Sammelbehälter Steckverzweigungen g1/2"

Code	Size	Ways	Pack	Carton
35.05.50	G 3/4" M	2x1/2"M	10	40
36.05.50	G 3/4" M	3x1/2"M	10	40
35.06.50	G 1" M	2x1/2"M	10	40
36.06.50	G 1" M	3x1/2"M	10	40

Junctions side thread M G1/2"

016

63



Monoblock®
Manifold, single, with in-line connections and unilateral junctions.

Nickel brass body.
Junction connections, centre distance 37 mm threaded M standard RBM for copper, polyethylene and multilayer pipe fittings.
Threaded in-line connections FF UNI-EN-ISO 228.

- Max operating temperature 110 °C
- Max operating pressure 10 Bar

Technical drawing on page 216

Use fittings with Standard RBM thread (see pg. 180) for pipe connection.
Please use brackets cod. 129.0X.00 for fixing in plastic boxes or brackets cod. 899.00.00 for fixing in metal boxes.

Simple manifold
Collecteur simple
Простой коллектор
Colector simplu
Colector simple
Einfacher Sammelbehälter

Code	Size	Ways	Pack	Carton
63.05.00	G 3/4"	4	3	12
63.05.20	G 3/4"	5	3	12
64.05.00	G 3/4"	6	3	12
64.05.20	G 3/4"	7	3	12
65.05.00	G 3/4"	8	3	12
63.06.00	G 1"	4	3	12
63.06.20	G 1"	5	3	12
64.06.00	G 1"	6	3	12
64.06.20	G 1"	7	3	12
65.06.00	G 1"	8	3	12
66.06.00	G 1"	10	3	12

016

59

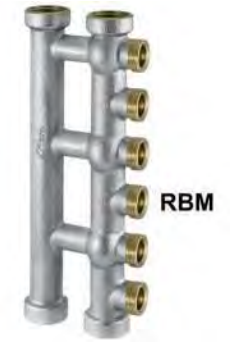

Monoblock®

Coplanar unilateral manifold, single, with in-line connections and unilateral junctions.

Nickel brass body.
Junction connections, centre distance 37 mm threaded M standard RBM for copper, polyethylene and multilayer pipe fittings.
Threaded FF in-line connections, centre distance 50 mm, UNI-ENISO 228.

- Max operating temperature 110 °C
- Max operating pressure 10 Bar

Technical drawing on page 216

Use fittings with Standard RBM thread (see pg. 180) for pipe connection.
Please use brackets cod. 128.0X.00 for fixing in plastic boxes.

Single-sided coplanar manifold
Collecteur coplanaire unilatéral
Компланарный коллектор односторонний
Colector complanar monolateral
Colector coplanar monolateral
Einfacher paralleler Sammelbehälter

Code	Size	Ways	Pack	Carton
59.05.00	G 3/4"	4	1	6
60.05.00	G 3/4"	6	1	6
61.05.00	G 3/4"	8	1	6
62.05.00	G 3/4"	10	1	6
59.06.00	G 1"	4	1	6
60.06.00	G 1"	6	1	6
61.06.00	G 1"	8	1	6
62.06.00	G 1"	10	1	6

Standard RBM thread W24.5x19F junction side

017

52



Monoblock®

Coplanar double-sided manifold, with in-line connections and two-sided junctions.

Nickel brass body.
Junction connections, centre distance 37 mm threaded M standard RBM for copper, polyethylene and multilayer pipe fittings.
In-line connections, threaded FF UNI-EN-ISO 228.
Connections centre distance 50mm (manifold 3/4").
Connection centre distance 55mm (1" manifold).

- Max operating temperature 110 °C
- Max operating pressure 10 Bar

Technical drawing on page 217

Use fittings with Standard RBM thread (see pg. 180) for pipe connection.
Please use brackets cod. 128.0X.00 for fixing in plastic boxes.

Double-sided coplanar manifold
Collecteur coplanaire bilatéral
Компланарный коллектор двусторонний
Colector complanar bilateral
Colector coplanar bilateral
Beidseitiger paralleler Sammelbehälter

Code	Size	Ways	Pack	Carton
52.05.20	G 3/4"	2+2	1	6
52.05.00	G 3/4"	4+4	1	6
53.05.00	G 3/4"	6+6	1	6
54.05.00	G 3/4"	8+8	1	6
55.05.00	G 3/4"	10+10	1	6
52.06.20	G 1"	2+2	1	6
52.06.00	G 1"	4+4	1	6
53.06.00	G 1"	6+6	1	6
54.06.00	G 1"	8+8	1	6
55.06.00	G 1"	10+10	1	6

Standard RBM thread W24.5x19F junction side

017

433



Mono-Zona®

Coplanar manifold, composed of a manifold with in-line connections and double-sided junctions with integrated 4-way motorized zone valve NC with adjustable bypass.

Nickel brass body.
Elastomer rod seals.
Obturator and seal in elastomer.
Silicon steel springs.
Cap for manual opening in ABS.
Junction connections, centre distance 37 mm threaded M standard RBM for copper, polyethylene and multilayer pipe fittings.
Threaded in-line connections FF UNI-EN-ISO 228.
Connections centre distance 50mm (manifold 3/4").
Connection centre distance 55mm (1" manifold).

- Max operating temperature 95 °C
- Max operating pressure 10 Bar
- Max differential pressure 1 Bar

Technical drawing on page 217

Replaceable screw unit.
Cod. 2440.013 See spare parts pricelist.
Use fittings with Standard RBM thread (see pg. 180) for pipe connection.
Please use brackets cod. 128.0X.00 for fixing in plastic boxes.

017

Double-sided coplanar manifold with built-in 4-way zone valve
Collecteur coplanaire bilatéral avec vanne de zone 4 voies intégrée
Компланарный коллектор двусторонний с встроенным 4-ходовым зонным клапаном
Colector complanar bilateral cu ventil de zonă cu 4 căi integrat
Colector coplanar bilateral con válvula de zona de 4 vías incorporada
Beidseitiger paralleler Sammelbehälter mit integriertem 4-Wege Zonenventil

Code	Size	Ways	Pack	Carton
433.05.00	G 3/4"	4+4	1	6
434.05.00	G 3/4"	6+6	1	6
435.05.00	G 3/4"	8+8	1	6
433.06.00	G 1"	4+4	1	6
434.06.00	G 1"	6+6	1	6
435.06.00	G 1"	8+8	1	6

Standard RBM thread W24.5x19F junction side

1150



Thermal insulation for RBM single Monoblock manifold consisting of expanded polyethylene half-casings with external antiscratch coating.

Complete with clips to fix half-bearings.

- Fire behaviour class I
- Density 33 kg/m^3
- Max operating temperature -40 ÷ +90 °C

Thermal insulation suitable for manifolds with junction connections 37 mm centre distance.

Single Monoblock manifold thermal shell
Coque thermique collecteur Monoblock simple
Теплоизоляционный кожух для коллекторов "Monoblock"
Carcasă termică colector Monobloc simplă
Aislante térmico para colector simple
Wärmeschale Block einfacher Sammler

Code	Size	Ways	Pack	Carton
1150.05.00	3/4"	2	5	5
1150.05.10	3/4"	3	5	5
1150.05.20	3/4"	4	5	5
1150.05.30	3/4"	5	1	5
1150.05.40	3/4"	6	5	5
1150.05.50	3/4"	7	1	20
1150.05.60	3/4"	8	1	1
1150.06.00	1"	2	1	5
1150.06.10	1"	3	1	5
1150.06.20	1"	4	1	5
1150.06.30	1"	5	1	5
1150.06.40	1"	6	1	5
1150.06.50	1"	7	1	1
1150.06.60	1"	8	1	1
1150.06.80	1"	10	1	30
3102.07.20	1"1/4	2	1	15
3102.07.30	1"1/4	3	1	10

041

866



Thermal insulation for RBM double-sided Monoblock manifold made up from expanded polyethylene half-bearings with external antiscratch coating.

Complete with clips to fix half-bearings.

- Fire behaviour class I
- Density 33 kg/m^3
- Max operating temperature -40 ÷ +90 °C

Can be cut along preformed lines to obtain the desired number of junctions.
Thermal insulation suitable for manifolds with junction connections 37 mm centre distance.

Double-sided Monoblock manifold thermal shell
Coque thermique collecteur Monoblock bilatéral
Теплоизоляционный кожух для двухсторонних коллекторов Monoblock
Carcasă termică colector Monobloc bilaterală
Aislante térmico para colector coplanar bilateral
Wärmeschale Block Sammler beidseitig

Code	Size	Ways	Pack	Carton
866.06.30	1"	4+4	1	1
866.06.20	1"	6+6	1	1
866.06.00	1"	10+10	1	1

041

895



Thermal insulation for RBM Mono-Zona Monoblock manifold made up from expanded polyethylene half-bearings with external antiscratch coating.

Complete with clips to fix half-bearings.

- Fire behaviour class I
- Density 33 kg/m^3
- Max operating temperature -40 ÷ +90 °C

Thermal insulation suitable for manifolds with junction connections 37 mm centre distance.

Single zone monoblock manifold thermal shell
Coque thermique collecteur Monoblock Mono-Zone
Теплоизоляционный кожух для коллекторов Monoblock Mono-Zona
Carcasă termică colector Monobloc Mono-Zonă
Aislante térmico para colector coplanar monolateral
Wärmeschale Block Sammler einzonig

Code	Size	Ways	Pack	Carton
895.06.20	1"	4+4	1	1
895.06.10	1"	6+6	1	1
895.06.00	1"	8+8	1	1

041

100



Single modular manifold, with in-line connections and one-way lateral junctions.

Nickel brass body.
Euroconus M3/4" threaded junction connections, centre distance 50 mm, for copper, polyethylene and multilayer pipe fittings.
Threaded in-line connections MF UNI-EN-ISO 228.

- Max operating temperature 110 °C
- Max operating pressure 10 Bar

Module for modular single manifold
Module pour collecteur simple modulable
Модуль для сборного коллектора
Modul pentru colector simplu combinabil
Colector simple con conexiones principales 1" Macho-Hembra, conexiones derivaciones G3/4" Euroconus
Modul für kombinierbarer einfachen Sammler

Code	Size	Ways	Pack	Carton
100.06.50	G 1"	2x3/4"	10	10
101.06.50	G 1"	3x3/4"	8	8
102.06.50	G 1"	4x3/4"	3	3

EUROCONUS thread G3/4" UNI-EN-ISO 228

Technical drawing on page 216

Use Euroconus fittings with G3/4" thread (see page 188) for pipe connection.
Use brackets cod. 219.0X.00 for metal case fastening.

016

227



Basic 1"1/4 manifold kit

Nickel-plated brass manifolds.
Steel brackets.
EUROCONUS M 3/4" threaded junction connections, centre distance 50 mm for copper, polyethylene and multilayer pipe fittings.
Threaded in-line FF connections (UNI-EN-ISO 228).

- Max. temperature: 110° C
- Maximum operating pressure: 1000 kPa

1"1/4 manifold kit
Kit collecteurs 1"1/4
Комплект коллекторов 1"1/4
Kit colectoare 1"1/4
Kit colectores 1"1/4
Bausatz Sammelbehälter 1"1/4

Code	Size	Ways	Pack	Carton
227.07.80	G 1"1/4	3	1	1
228.07.80	G 1"1/4	4	1	1
229.07.80	G 1"1/4	5	1	1
230.07.80	G 1"1/4	6	1	1
231.07.80	G 1"1/4	7	1	1
232.07.80	G 1"1/4	8	1	1
233.07.80	G 1"1/4	9	1	1
234.07.80	G 1"1/4	10	1	1
235.07.80	G 1"1/4	11	1	1
236.07.80	G 1"1/4	12	1	1

Euroconus G3/4" thread - UNI-EN-ISO 228

016

196



Simple MONOBLOCK manifold produced from casting, with in-line connections and one-way lateral junctions.

Nickel brass body.
EUROCONUS M 3/4" threaded junction connections, centre distance 50 mm for copper, polyethylene and multilayer pipe fittings.
Threaded in-line connections FF UNI-EN-ISO 228.

- Max. temperature: 110° C
- Maximum operating pressure: 1000 kPa

FF 1"1/4 simple manifolds
Collecteurs simples FF 1"1/4
Простые коллекторы ВНУТР.-ВНУТР. резьба 1"1/4
Colectoare simple Mamă-Mamă 1"1/4
Colectores simples HH 1"1/4
Einfacher Sammelbehälter IG/IG 1"1/4

Code	Size	Ways	Pack	Carton
196.07.30	G 1"1/4	3	3	3
197.07.30	G 1"1/4	4	2	2
198.07.30	G 1"1/4	5	3	3
199.07.30	G 1"1/4	6	2	2
200.07.30	G 1"1/4	7	3	3
201.07.30	G 1"1/4	8	2	2
202.07.30	G 1"1/4	9	2	2
203.07.30	G 1"1/4	10	2	2
204.07.30	G 1"1/4	11	2	2
205.07.30	G 1"1/4	12	2	2

Euroconus G3/4" thread - UNI-EN-ISO 228

016

3769

Thermal insulation for 1"1/4 manifold consisting of expanded polyethylene half-casings with external antiscratch coating.

Fire behaviour class I
Density 33 kg/m³
Max operating temperature -40 ÷ +90 °C

Thermal shell for manifold
Coque thermique pour collecteur
Теплоизоляционный кожух для коллектора
Carcasă termică pentru colector
Protección térmica para colector
Wärmeschale für Sammelbehälter

Code	Ways	Pack	Carton
3769.12.00	12	1	1

041

451



In line fitting with thermowell and socket and dial thermometer to check the manifold's temperature.

Threaded line connections MF UNI-EN-ISO 228

- Thermometer scale 0÷80 °C

In-line fitting with thermometer included
Raccord en ligne avec thermomètre inclus
Фитинг в линии с термометром
Racord de linie cu termometru inclus
Racor en línea con termómetro incluido
Verbindungsstück für Leitungen einschließlich Thermometer

Code	Size	Pack	Carton
451.06.00	1"	10	10
451.07.00	1"1/4	10	10

037

3781

Thermal insulation for thermometer holder well consisting of expanded polyethylene half-casings with external antiscratch coating.

Fire behaviour class I
Density 33 kg/m³
Max operating temperature -40 ÷ +90 °C

Thermal shell for thermometer holder well
Coque thermique pour puits porte-thermomètre
Теплоизоляционный кожух для корпуса-держателя термометров
Carcasă termică pentru teacă pentru termometru
Protección térmica para pozo porta termómetro
Wärmeschale für Schacht Thermometerhalterung

Code	Size	Pack	Carton
3781.00.00	G 1"1/4	1	1

041

303



Two dial thermometers complete with thermowell.

- Thermometer scale 0 ÷ 80 °C
- G1/2" connection (UNI-EN-ISO 228)

Two dial thermometers complete with thermowell
Couple de thermomètres à cadran avec puits thermométrique
Пара термометров со шкалой в комплекте с корпусом-держателем термометров
Pereche de termometre cu cadran, dotate cu teacă pentru termometru
Par de termómetros con cuadrante con pozo termométrico
Quadranten-Thermometerpaar komplett mit Temperaturanzeige-Fühlerschacht

Code	Size	Pack	Carton
303.04.00	Ø 40	1	1

016

216



VasaTre

Automatic air vent valve, degasser, complete with built-in drain valve and Gardena quick connector, pressure gauge connection. Float operation.

Nickel brass body.
Float and lever in PP.
Elastomer seals.
Threaded angle connection M UNI-EN-ISO 228.
Pressure gauge connection F G1/4.

- Max operating pressure 6 Bar
- Max operating temperature 100 °C
- Allowed fluid water and water+glycol 30 %

MAXIMUM DISCHARGE PRESSURE 2,5 bar

IDEAL FOR INSTALLATION ON MANIFOLDS

Automatic air vent valve for corner connection with protective cap
Purgeur d'air automatique raccord coudé avec capuchon de protection
Автоматический воздуоотводчик, угловой фитинг с защитным колпачком
Supapă automată de evacuare a aerului cu prindere unghiulară și capac de protecție
Válvula automática de purga de aire de la conexión de ángulo con capuchón de protección
Automatisches Ventil zum Luftabzug Winkelanschluss mit Schutzkappe

Code	Size	Model	Pack	Carton
216.05.60	G 3/4"	VasaTre	3	12
216.06.60	G 1"	VasaTre	3	12
216.07.60	G 1"1/4	VasaTre	3	3

Notes: To be installed on circuits with positive pumping pressures.
Assembly on horizontally developed manifolds and pipes.

Technical drawing on page 201

Replaceable float unit.
Cod. 891.00.00 See spare parts pricelist.

019

3780

Thermal insulation for automatic air vent valve/degasser consisting of expanded polyethylene half-casings with external antiscratch coating.

Fire behaviour class I
Density 33 kg/m³
Max operating temperature -40 ÷ +90 °C

NEW

Automatic air vent valve thermal shell, degasser
Coque thermique pour purgeur automatique d'air, dégazeur
Теплоизоляционный кожух для автоматического воздуоотводчика, дегазатора
Carcasă termică pentru supapa automată de aerisire și degazare
Protección térmica para válvula automática de purga de aire, desgasificador
Wärmeschale für automatisches Entlüftungsventil, Entgaser

Code	Size	Pack	Carton
3780.00.00	1"1/4	1	1

041

450



Air and water manual discharge terminal unit.

Air and water manual discharge terminal
Groupe terminal de décharge manuelle, air et eau
Завершающий узел ручного сброса воздуха и воды
Grup terminal de evacuare manual pentru aer și apă
Grupo terminal de purga manual de aire y agua
Abschlusseinheit manueller Luft- und Wasserauslass

Code	Size	Pack	Carton
450.06.00	1"	1	10
450.07.00	1"1/4	1	10

016

3782

Thermal insulation for discharge terminal unit consisting of expanded polyethylene half-casings with external antiscratch coating.

Fire behaviour class I
Density 33 kg/m³
Max operating temperature -40 ÷ +90 °C

NEW

Thermal shell for discharge terminal unit
Coque thermique pour groupe terminal de décharge
Теплоизоляционный кожух для завершающего узла сброса
Carcasă termică pentru grupul terminal de evacuare
Protección térmica para grupo terminal de descarga
Wärmeschale für Auslass-Abschlusseinheit

Code	Size	Pack	Carton
3782.00.00	1"1/4	1	1

041

221



056

Ball discharge cock, with hose connection and rotating cap.

- Threaded connection M UNI-EN-ISO 228

Ball discharge cock, with hose connection and rotating cap
Robinet de décharge à bille, avec raccord porte-caoutchouc et bouchon pivotant
Сливной кран шарового типа со штуцером для резинового шланга и поворотной заглушкой
Robinet de evacuare cu bilă, cu prindere la suportul pentru furtun și capac rotativ
Grifo de descarga de bola, con conexión portagoma y tapa giratoria
Auslasskugelhahn mit Schlauchanschluss und Drehverschluss

Code	Size	Pack	Carton
221.04.00	1/2"	10	10





016

T-terminal fitting with plugged junctions, suitable for the possible connection of air vent valve and cock

Nickel brass body.
Junction connections, F 3/8" and F 1/2".
Threaded connections M UNI-EN-ISO 228.

- Max. temperature: 110° C
- Max pressure: 1000 kPa

T-shaped terminal fitting
Raccord terminal en T
Конечный фитинг "Т"-образной формы
Racord terminal în T
Racor terminal en T
T-förmiges End-Verbindungsstück

Code	Size	Pack	Carton
70.07.10	1"1/4	10	10

T-shaped terminal fitting
Raccord terminal en T
Конечный фитинг "Т"-образной формы
Racord terminal în T
Racor terminal en T
T-förmiges End-Verbindungsstück

Code	Size	Pack	Carton
70.07.00	1"1/4	10	10

96



016

Multifunction line fitting with plugged junction. Suitable for the possible connection of air vent valve, thermometer or discharge cock

Nickel brass body.
F 1/2" junction connections.
Threaded connections MF UNI-EN-ISO 228.

- Max. temperature: 110° C
- Max pressure: 1000 kPa

In-line fitting with well
Raccord en ligne avec puits
Прямолинейный фитинг с корпусом-держателем
Racord în linie cu teaca
Racor en línea con pozo
Verbindungsstück in Linie mit Schacht

Code	Size	Pack	Carton
96.07.00	1"1/4	10	10

219



041

Pair of steel brackets to fixing single manifolds in metal boxes (for boxes code 2606.XX.02).

- Centre distance 220 mm

Pair of steel brackets for fixing manifolds
Paire d'étriers en acier pour fixation collecteurs
Пара стальных хомутов для крепления коллекторов
Pereche de bride din oțel pentru fixarea colectoarelor
Par de soportes para colectores simples, en acero
Bügelpaar aus Eisen zur Befestigung der Sammler

Code	Size	Pack	Carton
219.06.00	1"	1	50
219.07.00	1"1/4	1	50

293



Module for modular simple manifold, centre distance 50mm, flat seat, G 1/2”

Nickel brass body.
Junction connections, M G 1/2”, flat seat for copper, polyethylene and multilayer pipe fittings. Centre distance 50 mm.

- Max operating temperature 110 °C
- Max operating pressure 10 Bar

ACS

jet-line

Technical drawing on page 216

Use fittings with G1/2” thread, flat seat (see page 194) for pipe connection.
Please use brackets cod. 899.00.00 for fixing in metal boxes.

Module for modular simple manifold, flat seat (centre distance 50mm), m g 1/2”
Module pour collecteur simple modulable logement plat (entraxe 50 mm) m g 1/2”
Модуль для простого сборного коллектора, плоское седло (межосевое расстояние 50 мм) m g 1/2”
Modul pentru colector simplu modular, suport drept (interaxă 50 mm) m g 1/2”
Módulo para colector simple componible con alojamiento plano (distancia entre ejes 50 mm) m g 1/2”
Modul für einfachen kombinierbaren Sammelbehälter flacher Sitz (Weite 50 mm) m g 1/2”

Code	Size A	Size B	Ways	Pack	Carton
293.05.00	G 3/4”	G 1/2”	3	10	40
294.05.00	G 3/4”	G 1/2”	4	10	40
295.05.00	G 3/4”	G 1/2”	5	8	32
296.05.00	G 3/4”	G 1/2”	6	5	20
297.05.00	G 3/4”	G 1/2”	7	5	20
298.05.00	G 3/4”	G 1/2”	8	5	20

Junctions side thread M G 1/2" (flat seat)

039

3147



Module for modular simple manifold, centre distance 37mm (3/4”) 50mm (1”), G 1/2” junctions

Nickel brass body.
M G1/2” threaded junction connections for multilayer pipe fittings.
Centre distance 37mm (3/4”) - 50mm (1”).

- Max operating temperature 110 °C
- Max operating pressure 10 Bar

ACS

jet-line

Technical drawing on page 216

Use series 2796 fittings with G1/2” thread (see page 195) for pipe connection.
Please use brackets cod. 129.0X.00 for fixing in plastic boxes or brackets cod. 899.00.00 for fixing in metal boxes.

Module for modular simple manifold (centre distance 37mm), m g 1/2”
Module pour collecteur simple modulable (entraxe 37 mm) m g 1/2”
Модуль для простого сборного коллектора (межосевое расстояние 37 мм) m g 1/2”
Modul pentru colector simplu modular (interaxă 37 mm) m g 1/2”
Módulo para colector simple componible (distancia entre ejes 37 mm) m g 1/2”
Modul für einfachen kombinierbaren Sammelbehälter (Achsabstand 37 mm) m g 1/2”

Code	Size	Ways	Pack	Carton
3147.05.50	G 3/4”	2	10	40
3148.05.50	G 3/4”	3	10	40
3149.05.50	G 3/4”	4	10	40

Thread M G 1/2" junctions side

Module for modular simple manifold, (centre distance 50mm) m g 1/2”
Module pour collecteur simple modulable (entraxe 50 mm) m g 1/2”
Модуль для простого сборного коллектора (межосевое расстояние 50 мм) m g 1/2”
Modul pentru colector simplu modular (interaxă 50 mm) m g 1/2”
Módulo para colector simple componible (distancia entre ejes 50 mm) m g 1/2”
Modul für einfachen kombinierbaren Sammelbehälter (Achsabstand 50 mm) m g 1/2”

Code	Size	Ways	Pack	Carton
3150.06.50	G 1”	5	10	40
3151.06.50	G 1”	6	10	40
3152.06.50	G 1”	7	10	40

Thread M G 1/2" junctions side

039

967





Domestic Monoblock D.M.

Manifold to be used for distribution in domestic water systems. Main connections complete with shut-off valves. With inspection box complete with removable cover and plastering protection. Flush mount installation.

Nickel-plated brass manifold body.
Elastomer seals.
Shockproof ABS cap, ring nut and box
Side distribution connections, centre distance 37 mm threaded M standard RBM for copper, polyethylene and multilayer pipe fittings.
Euroconus G3/4" threaded main connections, centre distance 50mm, for copper, polyethylene, multilayer pipes.

- Max operating temperature 95 °C
- Max operating pressure 10 Bar

Technical drawing on page 217

Replaceable screw unit.
See spare parts pricelist.
Use Euroconus fittings with G3/4" thread (see page 188) for pipe connection on main connections side.
Use fittings with Standard RBM thread (see pg. 180) for junction side pipe connection.

Manifold with butterfly handwheel adjustment, case with external knob on cover
Collecteur réglage avec volant papillon boîte avec bouton externe sur le couvercle
Коллектор с дроссельным регулятором с помощью маховика, коробка с наружной ручкой на крышке
Colector de reglare cu roată manuală tip fluture, casetă cu mâner exterior pe capac
Colector de regulación con volante de mariposa caja con pomo externo en la tapa
Sammelbehälter Flügelradeinstellung Kasten mit externem Knauf auf dem Deckel

Code	Ways	Pack	Carton
967.00.00	5+3	1	10

Manifold with screwdriver adjustment, case without knob
Collecteur de réglage et tournevis boîte sans bouton
Коллектор с регулировкой отверткой, коробка без ручки
Colector reglare cu șurubelniță, casetă fără mâner
Colector de regulación con destornillador caja sin pomo
Sammelbehälter Einstellung mit Schraubendreher Kasten ohne Knauf

Code	Ways	Pack	Carton
967.00.10	5+3	1	10

Patent nr 261918

016A

903



Domestic Monoblock D.M.

Manifold to be used for distribution in domestic water systems. Main connections complete with shut-off valves. With inspection box complete with removable cover and plastering protection. Flush mount installation.

Nickel-plated brass manifold body.
Elastomer seals.
Shockproof ABS cap, ring nut and box
Side distribution connections, centre distance 37 mm threaded M standard RBM for copper, polyethylene and multilayer pipe fittings.
Euroconus G3/4" threaded main connections, centre distance 50mm; for copper, polyethylene, multilayer pipes.

- Max operating temperature 95 °C
- Max operating pressure 10 Bar



ACS

Technical drawing on page 217

Replaceable screw unit.
See spare parts pricelist.
Use Euroconus fittings with G3/4" thread (see page 188) for pipe connection on main connections side.
Use fittings with Standard RBM thread (see page 10.00 180) for junction side pipe connection.

Manifold with butterfly handwheel adjustment, case with external knob on cover
Collecteur réglage avec volant papillon boîte avec bouton externe sur le couvercle
Коллектор с дроссельным регулятором с помощью маховика, коробка с наружной ручкой на крышке
Colector de reglare cu roată manuală tip fluture, casetă cu mâner exterior pe capac
Colector de regulación con volante de mariposa caja con pomo externo en la tapa
Sammelbehälter Flügelradeinstellung Kasten mit externem Knauf auf dem Deckel

Code	Ways	Pack	Carton
903.00.50	4+6	1	10

Manifold with screwdriver adjustment, case without knob
Collecteur de réglage et tournevis boîte sans bouton
Коллектор с регулировкой отверткой, коробка без ручки
Colector reglare cu șurubelniță, casetă fără mâner
Colector de regulación con destornillador caja sin pomo
Sammelbehälter Einstellung mit Schraubendreher Kasten ohne Knauf

Code	Ways	Pack	Carton
903.00.60	6+4	1	10

Patent nr 261918

016A

1143



Extension kit for Monoblock-Sanitario M.S. manifold box.

- Max extension 50 mm

- Kit composed of:
- Extended threaded knobs;
- Extended cover fixing screw;
- Additional extensions for adjustments;
- Extensions fixing screws.

Extension kit for Monoblock-Sanitario M.S. manifold box
Kit de rallonge pour coffret collecteur Monoblock Sanitaire M.S.
Набор удлинителей для коллектора Monoblock-Sanitario M.S.
Kit de prelungitor pentru casetă colector Monobloc-Sanitar M.S.
Kit prolongación para colector Monoblock-Sanitario M.S.
Bausatz Verlängerung für Kasten Sammler Block-Brauchwasser M.S.

Code	Pack	Carton
1143.00.00	1	10

016A

2673



Thermal anti-condensation insulation made up from expanded polyethylene half-bearings with external antiscratch coating.

- Fire behaviour class1
- Density 33 kg/m^3
- Max operating temperature -40 ÷ +90 °C

Anti-condensation thermal shell
Coque thermique anti-condensation
Антиконденсационный термоизоляционный кожух
Carcasă termică anticondens
Aislante térmico anticondensación para colector coplanar bilateral de gran capacidad
Wärmeschale gegen Kondenswasser

Code	Model	Pack	Carton
2673.00.00	5+3	1	1
2674.00.00	6+4	1	1

041

MODULAR MANIFOLD FOR SANITARY SYSTEMS



RBM modular manifolds make it possible to implement compositions suitable for the control and distribution of sanitary water.

They are equipped with shut-off valves and indication of the utility supplied on each junction way.

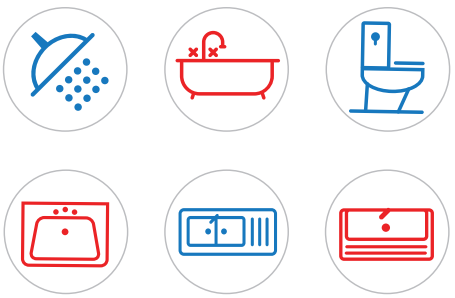

PRACTICAL INSTALLATION:

When assembling several elements one to another, the connections of the junctions are always perfectly aligned.





PRODUCTION RANGE:

RBM modular manifolds are made in sizes 3/4" and 1" with male and female connections at the ends. They are available in versions with 2, 3 and 4 distribution ways.

The junction connections are available with two different threads: standard RBM W24.5x19F or gas M G1/2".

To complete the range, plastic housing boxes and relative fixing brackets are available to make installation of the manifolds easy and quick.

- Manifold with o-ring seat;
- Micrometric shut-off valves on each junction;
- Indication of utility supplied on each junction.

171



Simple modular manifold with in-line connections, used for domestic water circuit distribution. Unilateral junctions complete with built-in micrometric shut-off valves.

Nickel brass body.
Elastomer seals.
Shockproof ABS handwheel.
RBM standard threaded M junction connections, centre distance 37 mm, for copper, polyethylene and multilayer pipe fittings, or M G1/2" (according to version).
In-line threaded connections MF UNI-EN-ISO 228.

- Max operating temperature 95 °C
- Max operating pressure 10 Bar

Technical drawing on page 217

Use fittings with Standard RBM thread (see pg. 180) or series 2796 with G 1/2" thread (see page 188) for pipe connection, according to versions.
O.R. seal manifold.

Modular manifold, Standard RBM connections
Collecteur sanitaire modulable raccords Standard RBM
Сборный коллектор, резьба стандартная RBM
Colector combinabil, prinderi Standard RBM
Colector con válvulas para instalaciones sanitarias, conexiones principales Macho-Hembra, conexiones derivaciones Standard RBM
Kombinierbarer Sammler, Standardanschlüsse RBM

Code	Size	Ways	Pack	Carton
171.05.00	G 3/4"	2	5	5
172.05.00	G 3/4"	3	5	5
1330.05.00	G 3/4"	4	5	5
171.06.00	G 1"	2	5	5
172.06.00	G 1"	3	5	5
1330.06.00	G 1"	4	5	5

Standard RBM thread W24.5x19F junction side

Modular domestic water manifold, G 1/2" connections
Collecteur sanitaire modulable raccords G1/2"
Сборный коллектор воды для хозяйственных нужд, крепления G 1/2"
Colector sanitar modular, prinderi G 1/2"
Colector sanitario componible conexiones G 1/2"
Kombinierbarer Sanitär-Sammelbehälter, Anschlüsse G 1/2"

Code	Size	Ways	Pack	Carton
2793.05.50	G 3/4"	2	5	5
2794.05.50	G 3/4"	3	5	5
2795.05.50	G 3/4"	4	5	5
2793.06.50	G 1"	2	5	5
2794.06.50	G 1"	3	5	5
2795.06.50	G 1"	4	5	5

Thread M G 1/2" junctions side

016

1331



Manifold plastic containment and inspection box, complete with removable cover.

Brackets for fixing manifold supplied separately.

Recessed assembly

- Box size mm (WxHxD) = 314x280x90
- Cover size mm (WxH) = 340x306

Can also be inserted in partition walls with 8 cm boxed structures, plastered on both sides. Paintable cover.

Sanitary manifold box
Coffret pour collecteurs sanitaires
Монтажный шкаф для санитарных коллекторов
Casetă pentru colectoare sanitare
Caja para colectores sanitarios, con soportes de fijación y tapa, en plástico
Kasten für Brauchwassersammler

Code	Pack	Carton
1331.30.00	10	10

018

1942



Pair of plastic brackets to fix simple modular manifolds in plastic boxes (for boxes code 1331.30.00).

Pair of plastic brackets
Paire d'étriers en plastique
Пара пластиковых хомутов
Pereche de bride din plastic
Par de soportes para caja de colectores sanitarios, en plástico
Bügelpaar aus Kunststoff

Code	Size	Pack	Carton
1942.05.00	3/4"	1	20
1942.06.00	1"	1	20

018

181



Buried connection elbow for DHW and heating systems.

Internal elbow in OT58, threaded M standard RBM (pipe side) and F 1/2" UNI-EN-ISO 228 (cock side). Shockproof PP container.

- Max temperature 90 °C
- Maximum operating pressure 1000 kPa

Connection elbow for DHW systems
Coude de branchement pour installations sanitaires
Кривая подключения для санитарно-технического оборудования
Curbă de racordare pentru instalații sanitare
Curva de conexión para instalaciones sanitarias
Anschlussbogen für Brauchwasseranlagen

Code	Figure	Size	Pack	Carton
181.00.20*	1	G 1/2"	1	20
181.00.30**	2	G 1/2"	1	20

**For flush wall mounting*
***For flush tile mounting*
Standard RBM thread (W24.5x19F) pipe side

Technical drawing on page 220

022

185



Buried connection elbows combined for DHW and heating systems. Can be coupled to single pipe valves and diverter valves with centre distance 37 mm.

Internal elbow in OT58, threaded M standard RBM (pipe side) and F 1/2" UNI-EN-ISO 228 (cock side). Shockproof PP container.

- Max temperature 90 °C
- Maximum operating pressure 1000 kPa

Buried connection elbow for DHW systems
Coude de branchement dissimulé pour installations sanitaires
Заниженная кривая подключения для санитарно-технического оборудования
Curbă de racordare îngropată pentru instalații sanitare
Curva de conexión empotrada para instalaciones sanitarias
Unterputz-Anschlussbogen für Brauchwasseranlagen

Code	Size	Pack	Carton
185.00.20	G 1/2" F	4	16

Standard RBM thread (W24.5x19F) pipe side

Also suitable to connect single-pipe and diverter valves, centre distance 37 mm for heating systems.
Pair of separable elbows supplied complete with wall templates.

Technical drawing on page 220

022

186



Connection elbow for double outlet DHW systems

Internal elbow in OT58 threaded F 1/2" UNI-EN-ISO 228 (cock side) and double connection threaded M standard RBM (pipe side). Shockproof PP container.

- Max temperature 90 °C
- Maximum operating pressure 1000 kPa

Connection elbow for double outlet DHW systems
Coude de branchement pour installations sanitaires double sortie
Кривая подключения для санитарно-технического оборудования с двойным выходом
Curbă de racordare pentru instalații sanitare cu ieșire dublă
Curva de conexión para instalaciones sanitarias de doble salida
Anschlussbogen für Brauchwasseranlagen mit doppeltem Ausgang

Code	Size	Pack	Carton
186.00.00	G 1/2" F	1	20

Standard RBM thread (W24.5x19F) pipe side

Technical drawing on page 220

022

182



Fig.1: Template for fixing elbows to wall. Suitable for fixing products code 181-185-186. Fig.2: Multipurpose knob with threaded connection M 1/2" for:

- Elbow levelling
- Hydraulic closure for sealing test
- Plastering protection

Connection elbow accessories
Accessoires pour coude de branchement
Принадлежности для кривой подключения
Accesorii pentru curba de racordare
Accesorios para curva de conexión
Zubehör für Anschlussbogen

Code	Figure	Size	Pack	Carton
182.00.00	1	-	10	-
183.00.00	2	1/2"	20	600

022

105



Simple adjustment straight shut-off valve for branch circuits from modular manifolds with standard RBM connections.

Nickel brass body.
Elastomer seals.
Shockproof ABS handwheel.
Rotary connection to manifold, threaded F standard RBM with seal.
Threaded M standard RBM connection for copper, polyethylene and multilayer pipe fittings.

- Max operating temperature 110 °C
- Max operating pressure 10 Bar

Manual valve
Vanne manuelle
Ручной клапан
Supapă manuală
Válvula manual recta, niquelada, conexiones 3 piezas Macho–Macho Standard RBM
Handventil

Code	Size	Pack	Carton
105.00.00	RBM	10	10

RBM Standard Thread (W24,5x19F)

Technical drawing on page 218

041

106



Simple adjustment straight shut-off lockshield valve for branch circuits from modular manifolds with standard RBM connections.

Nickel brass body.
Elastomer seals.
Shockproof ABS handwheel.
Rotary connection to manifold, threaded F standard RBM with seal.
Threaded M standard RBM connection for copper, polyethylene and multilayer pipe fittings.

- Max operating temperature 110 °C
- Max operating pressure 10 Bar

Lockshield regulating valve
Détendeur de réglage
Запорно-регулировочный клапан
Acționator de reglare
Detentor recto, niquelado, conexiones 3 piezas Macho–Macho Standard RBM
Rücklaufverschraubung zur Einstellung

Code	Size	Pack	Carton
106.00.00	RBM	10	10

RBM Standard Thread (W24,5x19F)

Technical drawing on page 218

041

556



Thermostatically controlled straight valve for branch circuits from modular manifolds with standard RBM connections

Nickel brass body.
Elastomer seals.
Shockproof ABS handwheel.
Rotary connection to manifold, threaded F standard RBM with seal.
Threaded M standard RBM connection for copper, polyethylene and multilayer pipe fittings.

- Max operating temperature 110 °C
- Max operating pressure 10 Bar

Valve with thermostatic option
Robinet thermostatique
Терморегулирующий клапан
Supapă cu posibilitate de reglare termostatică
Válvula termostatizable recta, niquelada, conexiones 3 piezas Macho–Macho Standard RBM
Mit Thermostat ausrüstbares Ventil

Code	Size	Pack	Carton
556.00.00	RBM	10	10

RBM Standard Thread (W24,5x19F)

Technical drawing on page 218

Can be coupled to thermoelectric actuatorss RBM code 306.00.X2

041

3202



Modular brass manifold kit with a 37mm centre-to-centre distance
Kit collecteurs modulaires en laiton entraxe 37 mm
Комплект модульных коллекторов из латуни с межосевым расстоянием 37 мм
Kit colectoare modulare din alamă interaxă 37 mm
Kit de colectores modulares de latón con distancia entre ejes de 37 mm
Bausatz modulare Sammelbehälter aus Messing Weite 37 mm

Code	Size	Ways	Pack	Carton
3202.06.90	1″	2+2	1	1
3203.06.90	1″	3+3	1	1
3204.06.90	1″	4+4	1	1
3205.06.90	1″	5+5	1	1
3206.06.90	1″	6+6	1	1
3207.06.90	1″	7+7	1	1
3208.06.90	1″	8+8	1	1
3209.06.90	1″	9+9	1	1
3210.06.90	1″	10+10	1	1
3211.06.90	1″	11+11	1	1
3212.06.90	1″	12+12	1	1
3213.06.90	1″	13+13	1	1
3214.06.90	1″	14+14	1	1

Distribution way connections, centre distance 37 mm - RBM standard thread W24.5x19F

Modular brass manifold kit.

Each kit contains:
n° 1 multi-way manifold unit complete with micrometric lockshield valves with graduated handwheel;
n° 1 multi-way manifold unit complete with valves with thermostatic option with hand wheel;
1 pair of steel brackets for fixing manifolds.

- Temperature range 0÷100 °C
- Max operating pressure 10 Bar

016

Manifold kit can be inserted in walls constructed in 8 cm box, plastered.
Composition with adjustable lockshield valves with graduated handwheel.
Use fittings for multilayer pipe with RBM Series 1944 Standard thread (see page 183) for pipe connection.
Use fittings for polyethylene pipe with RBM Series 3597 Standard thread (see page 181) for pipe connection.

Set up Series 3189 thermo-electric actuators to automatically shut off the single circuits. For ordering codes, please refer to Kilma price list chapter 2.
For kit accessories/spare parts, see the Kilma price list, chapter 4.

MODULAR COMPACT BRASS MANIFOLD KIT

(37 MM C.T.C.)

SUPER COMPACT

37 mm c.t.c. manifold

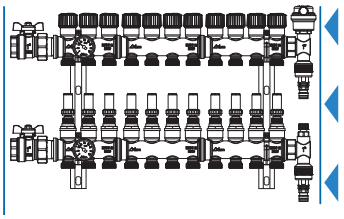

50 mm c.t.c. manifold

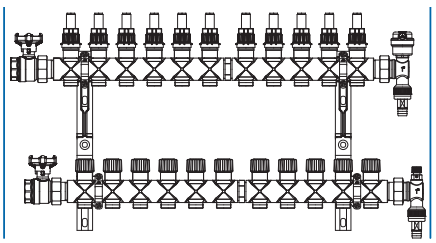





- **Compact:** manifold kit can be inserted in 80 mm housing boxes (Box1 series 2606);
- **Manual/Automatic on-off** interception of the circuits;
- **Nickel plated brass manifolds:** high quality material for best reliability through time; not affected by corrosion that could weaken system efficiency.

MANIFOLD / BRACKET / CONTAINMENT BOX SELECTION GUIDE

SERIES	MANIFOLD	BRACKETS	CONTAINMENT BOX
34	Modular simple manifold 	Code 129.05.00 (ø socket 34 mm) Code 129.06.00 (ø socket 40 mm) 	Code 86.XX.00 (plastic box) 
		Code 899.00.00 	Code 2606.X0.02 (metal-plastic box) 
63	Simple manifold 	Code 129.05.00 (ø socket 34 mm) Code 129.06.00 (ø socket 40 mm) 	Code 86.XX.00 (plastic box) 
		Code 899.00.00 	Code 2606.X0.02 (metal-plastic box) 
59	Coplanar single-sided manifold 	Code 128.05.00 (ø socket 34 mm) Code 128.06.00 (ø socket 40 mm) 	Code 86.XX.00 (plastic box) 
52	Coplanar double-sided manifold 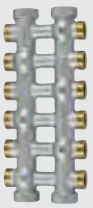	Code 128.05.00 (ø socket 34 mm) Code 128.06.00 (ø socket 40 mm) 	Code 86.XX.00 (plastic box) 
433	*Mono-Zona* coplanar double-sided manifold 	Cod. 128.05.00 (ø presa 34 mm) Cod. 128.06.00 (ø presa 40 mm) 	Cod. 86.XX.00 (cassetta plastica) 
100	Modular simple manifold 	Code 219.06.00 (ø socket 34,4 mm) 	Code 2606.X0.02 (metal-plastic box) 
293	Jet-line simple manifold 	Code 899.00.00 	Code 2606.X0.02 (metal-plastic box) 

SERIES	MANIFOLD	BRACKETS	CONTAINMENT BOX
3147	Jet-line simple manifold 	Code 129.05.00 (ø socket 34 mm) Code 129.06.00 (ø socket 40 mm) 	Code 86.XX.00 (plastic box) 
		Code 899.00.00 	Code 2606.X0.02 (metal-plastic box) 
171 **2793**	Modular simple sanitary manifold 	Code 1942.05.00 Code 1942.06.00 	Code 1331.30.00 (plastic box) 
829 **2028** **608**	Brass compact manifold 	Code 792.06.00 	Code 2606.X0.02 (metal-plastic box) 
		Code 810.06.00 	Kilma EVO/ECO control unit boxes (manifold aligned fixing metal box) Code 898.XX.02 (wall mounted metal box)* 
		- (brackets supplied with the Quickbox)	Code 1972.XX.00 (plastic box) 
		Code 219.07.00	Wall mount - no box
1410	Polymer compact manifold 	Code 1528.06.00 	Code 2606.X0.02 (metal-plastic box) 
		- (brackets supplied with the Quickbox)	Code 1972.XX.00 (plastic box) 
948 **1002**	Modular anti-condensation polymer manifold 	Code 1000.00.00 	Code 2606.X0.02 (metal-plastic box) 
3201 **3202**	Modular brass manifold centre distance 37 mm 	Code 3248.06.00 (centre distance 220 mm) 	Code 2606.X0.02 (metal-plastic box) 
		Code 3248.06.90 (centre distance 210 mm)*	Wall mount - no box

* Non-standard application/code, not proposed in RBM catalogue.


RBM
Brass

ZONE VALVES

VANNES DE ZONE
ЗОНАЛЬНЫЕ КЛАПАНЫ
VENTILE DE ZONĂ
VÁLVULAS DE ZONA
ZONENVENTILE

Zone valves	pag. 168	
Accessories for zone valves	pag. 170	
Compact zone valves	pag. 171	

112



2-way motorised zone valve. Normally • łosed.

Nickel brass body.
Obturator and seal in elastomer.
Elastomer rod seals.
Silicon steel springs.
Anti-water hammer function.
Cap for manual opening in ABS.
Threaded in-line connections FF UNI-EN-ISO 228.

- Max operating temperature +95 °C
- Max operating pressure 10 Bar
- Max differential pressure 1 Bar

Technical drawing on page 218

2-way motorizable zone valve
Vanne de zone motorisable à 2 voies
Зонный двухходовой клапан (управляется сервоприводом)
Supapă de zonă motorizabilă cu 2 canale
Válvula de zona 2 vías a pistón, normalmente cerrada, motorizable
Motorisierbares Zonenventil mit 2 Wege

Code	Size	Kv (m³/h)	Pack	Carton
112.04.70	G 1/2"	2,70	1	6
112.05.70	G 3/4"	4,70	1	6
112.06.70	G 1"	6,00	1	6

012

113



3-way motorised zone valve. Normally • łosed on straight way.

Nickel brass body.
Obturator and seal in elastomer.
Elastomer rod seals.
Silicon steel springs.
Anti-water hammer function.
Cap for manual opening in ABS.
Threaded connections FF UNI-EN-ISO 228.

- Max operating temperature +95 °C
- Max operating pressure 10 Bar
- Max differential pressure 1 Bar

Technical drawing on page 218

3-way motorizable zone valve
Vanne de zone motorisable à 3 voies
Зонный трехходовой клапан (управляется сервоприводом)
Supapă de zonă motorizabilă cu 3 canale
Válvula de zona 3 vías a pistón, normalmente cerrada, motorizable
Motorisierbares Zonenventil mit 3 Wege

Code	Size	Kv (m³/h)	Pack	Carton
113.04.70	G 1/2"	2,70 / 3,30 *	1	6
113.05.70	G 3/4"	4,70 / 5,00 *	1	6
113.06.70	G 1"	6,00 / 7,00 *	1	6

** Kv straight bore / kv by-pass*

012

114



4-way motorised zone valve. Normally • łosed on straight way. Can be coupled to Monoblock coplanar manifolds and complete with adjustable micrometric bypass.

Nickel brass body.
Obturator and seal in elastomer.
Elastomer rod seals.
Silicon steel springs.
Anti-water hammer function.
Cap for manual opening in ABS.
Threaded in-line connections FF UNI-EN-ISO 228.

- Max operating temperature +95 °C
- Max operating pressure 10 Bar
- Max differential pressure 1 Bar

4-way motorizable zone valve
Vanne de zone motorisable à 4 voies
Зонный четырёхходовой клапан (управляется сервоприводом)
Supapă de zonă motorizabilă cu 4 canale
Válvula de zona 4 vías a pistón con by-pass regulable, normalmente cerrada, motorizable
Motorisierbares Zonenventil mit 4 Wege

Code	Size	Kv (m³/h)	Pack	Carton
114.05.70	G 3/4"	4,70	1	6
114.06.70	G 1"	6,00	1	6

Technical drawing on page 218

With adjustable bypass for perfect balancing of the network even in case of stoppage of the fed zone.
Can also be installed on coplanar manifolds.
adjustable centre distance 50 ÷ 55 mm.

012

114



012

4-way motorised zone valve. Normally •losed on straight way. Can be coupled to Monoblock coplanar manifolds and complete with adjustable micrometric bypass and extension lead.

Nickel brass body.
Obturator and seal in elastomer.
Elastomer rod seals.
Silicon steel springs.
Anti-water hammer function.
Cap for manual opening in ABS.
Threaded in-line connections FF UNI-EN-ISO 228.

- Max operating temperature +95 °C
- Max operating pressure 10 Bar
- Max differential pressure 1 Bar

4-way motorizable zone valve
Vanne de zone motorisable à 4 voies
Зонный четырёхходовой клапан (управляется сервоприводом)
Supapă de zonă motorizabilă cu 4 canale
Válvula de zona 4 vías a pistón con by-pass regulable, normalmente cerrada, motorizable
Motorisierbares Zonenventil mit 4 Wege

Code	Size	Kv (m^3/h)	Pack	Carton
114.05.20	G 3/4"	4,70	1	6
114.06.20	G 1"	6,00	1	6

Technical drawing on page 218

With adjustable bypass for perfect balancing of the network even in case of stoppage of the fed zone.
Can also be installed on coplanar manifolds.
adjustable centre distance 114 ÷ 119 mm.

373



Electromechanical On-Off actuator for zone valves, complete with built-in auxiliary microswitch with potential-free and live contact. Electric connection via internal terminal board.

Normally closed valve position when power missing.

- Power supply 24V AC or 230V AC
- Consumption 3 W
- Switch contacts capacity 6A 250 VAC
- Frequency 50 Hz
- Electric protection IP 42
- Operating temperature -5 ÷ +60 °C
- Triggering time 240 seconds

CE

Electromechanical actuator
Servomoteur électromécanique
Электромеханический сервопривод
Servocomandă electromecanică
Servomando electromecánico
Elektrothermische Servosteuerung

Code	Power supply	Pack	Carton
373.00.50	230V AC	1	10
373.00.60	24V AC	1	10

Version supplied with Auxiliary Microswitch

Technical drawing on page 218

3-wire normally open command and built-in microswitch.

014

360



Thermo-electric On-Off actuator for zone valves. Electric connection via internal terminal board.

Normally closed valve position when power missing.

- Power supply 24V AC or 230V AC
- Consumption 5 V
- Frequency 50/60 Hz
- Electric protection IP 31
- Max ambient temperature +5 ÷ +50 °C
- Triggering time ~120 seconds

CE

Technical drawing on page 219

2-wire normally open command. 3-year product warranty when used correctly.

Thermo-electric actuator
Servomoteur électrothermique
Электротермический сервопривод
Servocomandă electrotermică
Servomando electrotérmico
Elektrothermische Servosteuerung

Code	Power supply	Pack	Carton
360.00.10	230V AC	1	50
360.00.20	24V AC	1	50

Version without Auxiliary Microswitch

Thermo-electric actuator with auxiliary microswitch
Servomoteur électrothermique avec microrupteur auxiliaire
Электротермический сервопривод со вспомогательным микропереключателем
Servocomandă electrotermică cu microîntrerupător auxiliar
Servomotor electrotérmico normalmente abierto con microinterruptor para válvula de zona a pistón
elektrothermische Servosteuerung mit Hilfmikroschalter

Code	Power supply	Pack	Carton
360.00.30	230V AC	1	50
360.00.40	24V AC	1	50

Version supplied with Auxiliary Microswitch

014

313



Valve auxiliary limit switch.

Supplied with thermo-electric actuators code 360.00.30 and 360.00.40
Closed contact with actuators powered.

- Contacts capacity 2(5)A 250 V AC

CE

Auxiliary switch to be combined to servocontrol series 360

Auxiliary switch for thermo-electric actuators
Interrupteur auxiliaire pour servomoteur électrothermique
Вспомогательный микропереключатель для электротермического сервопривода
Întrerupător auxiliar pentru servocomandă electrotermică
Microinterruptor auxiliar para servomotor electrotérmico
Hilfsschalter elektrothermische Servosteuerung

Code	Model	Pack	Carton
313.00.02	D 41	1	1

014

814



2-way compact motorizable zone valve. Normally closed with actuator mounted not powered.

Nickel brass body.
Obturator and seal in elastomer.
Elastomer rod seals.
Stainless steel springs.
Handwheel for manual opening in ABS.
Threaded connections MM UNI-EN-ISO 228.

- Max operating temperature 95 °C
- Max operating pressure 10 Bar
- Max differential pressure 1 Bar

2 way compact, motorizable zone valve - filling unit inlets
Vanne de zone compacte motorisable à 2 voies - raccords écrou libre
Компактный двухходовой зонный клапан (управляется сервоприводом) с патрубками
Supapă de zonă compactă cu acționare cu motor cu 2 căi - prinderi cu racord
Válvula de zona compacta motorizable de 2 vías - conexiones de boca de llenado
Motorisierbares Zonenventil kompakt mit 2 Wege - Stutzenanschluss

Code	Size	Pack	Carton
814.04.20	G 1/2" M	1	10
814.05.20	G 3/4" M	1	10
814.06.20	G 1"	1	10

Technical drawing on page 219

Prearranged for thermo-electric actuators code 2944.00. X2

013

813



3-way compact motorizable zone valve . Normally closed on straight way with actuator mounted , not powered.

Nickel brass body.
Obturator and seal in elastomer.
Elastomer rod seals.
Stainless steel springs.
Handwheel for manual opening in ABS.
Threaded connections MM UNI-EN-ISO 228.

- Max operating temperature 95 °C
- Max operating pressure 10 Bar
- Max differential pressure 1 Bar

3 way compact, motorizable zone valve - filling unit inlets
Vanne de zone compacte motorisable à 3 voies - raccords écrou libre
Компактный трёхходовой зонный клапан (управляется сервоприводом) с патрубками
Supapă de zonă compactă cu acționare cu motor cu 3 căi - prinderi cu racord
Válvula de zona compacta motorizable de 3 vías - conexiones de boca de llenado
Motorisierbares Zonenventil kompakt mit 3 Wege - Stutzenanschluss

Code	Size	Pack	Carton
813.04.20	G 1/2" M	1	10
813.05.20	G 3/4" M	1	10
813.06.20	G 1"	1	10

Technical drawing on page 219

Prearranged for thermo-electric actuators code 2944.00. X2

013

736



4-way compact motorizable zone valve. Normally closed on straight way with actuator mounted, not powered. Can be coupled to Monoblock coplanar manifolds.

Nickel brass body.
Obturator and seal in elastomer.
Elastomer rod seals.
Stainless steel springs.
Handwheel for manual opening in ABS.
In-line threaded union couplings FF UNI-EN-ISO 228.
Centre distance 50 ÷ 55mm.

- Max operating temperature 95 °C
- Max operating pressure 10 Bar
- Max differential pressure 1 Bar

4 way compact, motorizable zone valve - filling unit inlets
Vanne de zone compacte motorisable à 4 voies - raccords écrou libre
Компактный четырёхходовой зонный клапан (управляется сервоприводом) с патрубками
Supapă de zonă compactă cu acționare cu motor cu 4 căi - prinderi cu racord
Válvula de zona compacta motorizable de 4 vías - conexiones de boca de llenado
Motorisierbares Zonenventil kompakt mit 4 Wege - Stutzenanschluss

Code	Size	Ways	Pack	Carton
736.04.20	G 1/2"	4	1	10
736.05.20	G 3/4"	4	1	10
736.06.20	G 1"	4	1	10

Technical drawing on page 219

Installable on coplanar manifolds.
Adjustable centre distance 50 ÷ 55 mm.
Prearranged for thermo-electric actuators code 2944.00. X2

013

2944



Thermo-electrically controlled actuator for compact zone valves, complete with valve body clamping ring nut and electric power cable.

Normally closed valve position when power missing.

- Power supply 24/230 V
- Consumption 2,5 W
- Frequency 50/60 Hz
- Electric protection IP54
- Operating temperature +5 ÷ +50 °C
- Switch contact rating (0.5A) 1 A (if any)
- 5 mm stroke
- Size (lxhxp): 44x52x60 mm

CE

Technical drawing on page 210

Thermo-electrically controlled actuator
Servomoteur à commande électrothermique
Электротермический сервопривод
Servomotor cu comandă electrotermică
Cabezal electrotérmico normalmente cerrado para válvulas termostatizables
Servomotor mit elektrothermischer Steuerung

Code	Power supply	Pack	Carton
2944.00.02	230V AC	1	50
2944.00.12	24V AC	1	50

Version without auxiliary microswitch (2 wires)

Thermo-electrically controlled actuator with auxiliary microswitch
Servomoteur à commande électrothermique avec microrupteur auxiliaire
Электротермический сервопривод с вспомогательным микропереключателем
Servomotor cu comandă electrotermică, cu microîntrerupător auxiliar
Cabezal electrotérmico normalmente cerrado con microinterruptor, para válvula termostatizable y válvula de zona compacta
Servomotor mit elektrothermischer Steuerung mit Hilfmikroschalter

Code	Power supply	Pack	Carton
2944.00.42	230V AC	1	50
2944.00.52	24V AC	1	50

Version supplied with auxiliary microswitch (4 wires)

014

MOTORISED COMPACT ZONE VALVES

The **Compact zone valve** is a device that allows shutting-off or deviating (manual or automatic) the flow in transit. Available in the versions with two, three and four ways it is supplied, as standard, with a knob for manual opening and closing control.

The small dimensions and the limited hydraulic through sections make it particularly suitable for direct connection to the supply terminals or at the service of small heating areas (up to 6-8 radiators)



Zona 2C

Zona 3C



Zona 4C

APPLICATION RANGE

- interception of small utilities;
- automatic shut-off of thermal zones (with the option of combination with coplanar manifolds);
- interception of power fan coils from circuits with two and/or four tubes.

- Reduced overall dimensions;
- Extremely quiet operation;
- Valve with union connections;
- Operating piston;
- Higher reliability compared to zone ball valves.



The valve can be easily automated by coupling it directly with a thermo-electric actuator from the series 2944.00.X2.

CHARACTERISTIC COMPONENTS AND FUNCTIONAL DIAGRAM OF FLUID FLOW PASSAGE

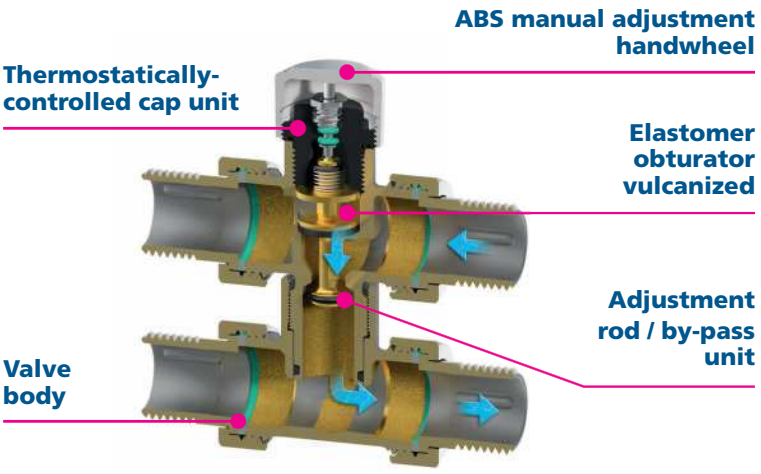

ZONE VALVE CLOSED

on the straight section, with adjustment handwheel screwed all the way on, or with installed actuator NOT powered.

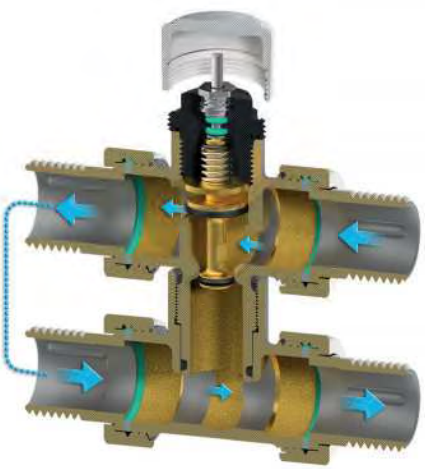

ZONE VALVE OPEN

on the straight section, with adjustment handwheel completely unscrewed, or with powered installed actuator.


RBM
Brass

HOUSING BOXES

COFFRETS
МОНТАЖНЫЕ ШКАФЫ ДЛЯ СОДЕРЖИМОГО
CASETE DE MONTAJ
CAJAS CONTENEDORAS
KASTENBEHÄLTER

Plastic boxes	pag. 176	
Metal boxes	pag. 177	

85



018

Manifold plastic containment and inspection box without bottom, complete with removable cover with ventilation slots, counter frame, fixing screws and removable protection for plastering.

Flush mount installation, paintable cover

Technical drawing on page 219

Plastic box without bottom
Coffret en plastique sans fond
Пластиковый монтажный шкаф
Casetă din plastic fără fund
Caja en plástico empotrable sin fondo
Kasten aus Kunststoff ohne Boden

Code	LxH (mm)	Model	Pack	Carton
85.35.00	250x350	SF	24	24
85.50.00	250x500	SF	18	18
85.58.00	310x580	SF	13	13
85.40.00	400x500	SF	13	13
85.75.00	360x750	SF	14	14

86



018

Manifold plastic containment and inspection box with bottom, complete with removable cover with ventilation slots, counter frame, fixing screws and removable protection for plastering

Flush mount installation, paintable cover

Technical drawing on page 219

Plastic box with bottom
Coffret en plastique avec fond
Пластиковый монтажный шкаф
Casetă din plastic cu fund
Caja en plástico empotrable con fondo
Kasten aus Kunststoff mit Boden

Code	LxH (mm)	Model	Pack	Carton
86.35.00*	250x350	CF	18	18
86.50.00*	250x500	CF	11	-
86.58.00*	310x580	CF	10	10
86.40.00*	400x500	CF	9	9
86.75.00*	360x750	CF	10	10

**Adjustable depth 85-100 mm*
***Adjustable depth 95-120 mm*

362



018

Manifold plastic containment and inspection box with bottom and side closures, complete with removable cover with ventilation slots, brackets and fixing screws for simple manifolds ø3/4" centre distance 37 mm.

Flush mount installation, paintable cover

Technical drawing on page 219

Plastic box with bottom closed laterally
Coffret en plastique avec fond fermé latéralement
Пластиковый монтажный шкаф закрытый сбоку
Casetă din plastic cu fund închisă în partea laterală
Caja en plástico empotrable con fondo, cerrada lateralmente
Kasten aus Kunststoff mit Boden seitlich geschlossen

Code	LxH (mm)	Model	Pack	Carton
362.35.00*	250x350	CFC	10	10
362.50.00*	250x500	CFC	4	4

**Fixed depth 100 mm*

128



041

Pair of plastic brackets to fix one-sided and two-sided manifolds in plastic boxes (for boxes code 86.XX.00).

Bracket centre distance 50 mm (3/4") 55 mm (1").

Pair of plastic brackets
Paire d'étriers en plastique
Пара пластиковых хомутов
Pereche de bride din plastic
Par de soportes para caja de colectores sanitarios, en plástico
Bügelpaar aus Kunststoff

Code	Size	Pack	Carton
128.05.00	3/4"	1	10
128.06.00	1"	1	10

129



041

Pair of plastic brackets to fix Single manifolds in plastic boxes (for boxes code 86.XX.00).

Bracket centre distance 114,5 mm.

Pair of plastic brackets
Paire d'étriers en plastique
Пара пластиковых хомутов
Pereche de bride din plastic
Par de soportes para caja de colectores sanitarios, en plástico
Bügelpaar aus Kunststoff

Code	Size	Pack	Carton
129.05.00	3/4"	1	10
129.06.00	1"	1	10

2606



Box1 Recessed metal case for manifolds with plastic cover
Box1 Coffret métallique encastrable pour collecteurs, couvercle en plastique
Box1 Металлический встраиваемый монтажный шкаф для коллекторов с пластмассовой крышкой
Box1 Casetă metalică cu încastrare pentru colectoare, cu capac din plastic
Box1 Caja metálica empotrable para colectores con tapa en plástico, color blanco
Box1 Metallkasten zum Einbau für Sammler mit Kunststoffdeckel

Code	LxH (mm)	Pack	Carton
2606.40.02	400x500	1	1
2606.60.02	600x500	1	1
2606.80.02	800x500	1	1
2606.10.02	1000x500	1	1

Adjustable depth 80 - 130 mm (overall depth 80 - 150 mm if considering the useful stroke of the screws used for anchoring the plastic cover to the metal structure).

Pair of floor-anchoring feet
Paire de pieds pour fixation au sol du coffret
Пара ножек для крепления монтажного шкафа к полу
Pereche de picioruşe pentru fixarea la sol a casetei
Par de pies para la fijación de la caja al suelo
Fußpaarzur Befestigung des Kastens am Boden

Code	Pack	Carton
2948.00.02	1	1

Maximum adjustable height 100 mm

Box1
Manifold containment and inspection box, for flush-mount installation.

Made of galvanized steel with bottom and side locks, complete with universal moveable guides for bracket mounting and removable paintable plastic lid. Feet for fastening to the floor, ordered separately.

It can be inserted in walls made with 8 cm bricks, plastered on both sides.
Paintable plastic cover.
Telescopic chassis/frame and cover.
With actuators installed on valves with thermostatic option, provide extended cover clamping screws code 2155.005
Execution with movable guides for the free positioning of the components inside the box.
UNIVERSAL case, suitable for housing 1" manifolds Kit series 608 - 2028 - 1410 - 1002 - 3202 - 3615
Feet for fastening to the floor, ordered separately as accessories.

027

899



Pair of plastic brackets
Paire d'étriers en plastique
Пара пластиковых хомутов
Pereche de bride din plastic
Par de soportes para caja de colectores sanitarios, en plástico
Bügelpaar aus Kunststoff

Code	Size	Pack	Carton
899.00.00	3/4" 1"	1	1

Pair of plastic brackets to fix Single manifolds in metal boxes (for boxes code 2606.XX.02).

Bracket centre distance 220 mm.

041


RBM
Brass

FITTINGS

RACCORDS
ФИТИНГИ
RACORDURI
RACORES
FITTINGS

Fittings with RBM standard thread	pag. 180	
Fittings for iron, copper and polyethylene pipes	pag. 184	
Euroconus G 3/4" fittings with thread	pag. 188	
Accessories for manifolds	pag. 191	
Jet-line fittings	pag. 195	

69



Spanner for fitting with Standard RBM thread.

Square 1/2" connection, for combination or torque wrenches, to easily tighten fittings in any position.

Spanner for Standard RBM fitting
Clé pour raccord Standard RBM
Ключ к стандартным фитингам RBM
Cheie pentru racord Standard RBM
Llave hexagonal abierta para adaptadores Standard RBM
Schlüssel für Standardanschluss RBM

Code	Size	Pack	Carton
69.00.00	Ch 28	2	26

041

311



Y-shaped fitting to split copper, polyethylene and multilayer metal-plastic circuits.

Nickel brass body.
Elastomer seals.
Standard RBM rotary threaded connection W24.5x19F.
Standard RBM split threaded connections W24.5x19F.

- Max operating temperature 100 °C
- Max operating pressure 10 Bar

Y-shaped fitting
Raccord en Y
Фитинг У-образный
Racord în formă de Y
Racor en Y para desdoblar una conexión Standar RBM
Y-Anschluss

Code	Size A	Pack	Carton
311.00.00	RBM	10	10

Standard RBM thread W 24.5x19 F

Allows to split circuits deriving from RBM manifolds.

040

41



Compression fitting for annealed copper pipe.

Brass nut and pipe clamping ogive.
Nickel plated nut.
Elastomer seal ogive.
Standard RBM threaded F connection.

- Max operating temperature 95 °C
- Max operating pressure 10 Bar

Only to be used with seat set at Ø18.
To be used with reducing coupling code 57.18.00 (see page 192) to connect the Ø18 fitting to valves/ manifolds with Standard RBM threading

Copper pipe fitting
Raccord pour tube en cuivre
Фитинг для медных труб
Racord pentru conductă de cupru
Adaptador Standard RBM para tubo de cobre recocido
Anschluss für Kupferrohr

Code	Size	Pack	Carton
41.10.20	RBM Ø 10	10	100
41.12.20	RBM Ø 12	10	100
41.14.20	RBM Ø 14	10	100
41.15.20	RBM Ø 15	10	100
41.16.20	RBM Ø 16	10	100

Standard RBM thread W 24.5x19 F

029

41



Compression fitting for annealed copper pipe.

Brass nut and pipe clamping ogive.
Nickel plated nut.
Elastomer seal ring.
Standard RBM threaded F connection.

- Max operating temperature 95 °C
- Max operating pressure 10 Bar

Only to be used with seat set at Ø18.
To be used with reducing coupling code 57.18.00 (see page 192) to connect the Ø18 fitting to valves/ manifolds with RBM Standard thread.

Copper pipe fitting
Raccord pour tube en cuivre
Фитинг для медных труб
Racord pentru conductă de cupru
Adaptador Standard RBM para tubo de cobre recocido
Anschluss für Kupferrohr

Code	Size	Pack	Carton
41.18.40	RBM Ø 18	10	100

Standard RBM thread W 24.5x19 F

029

602



KEEP: Compression fitting for raw copper pipe in bars, annealed copper, brass, soft steel and stainless steel.

Brass nut and pipe clamping ogive.
Nickel plated nut.
Elastomer seal ogive.
Standard RBM threaded F connection.

- Max operating temperature 95 °C
- Max operating pressure 10 Bar

Fitting for copper pipe, brass pipe, steel pipe
Raccord pour tube en cuivre, tube en laiton, tube en acier
Фитинг для медных, латунных и стальных труб
Racord pentru conductă din cupru, conductă de alamă, conductă de oțel
Adaptador Standard RBM para tubo de cobre crudo, cobre recocido y acero
Anschluss für Kupferrohr, Messingrohr, Stahlrohr

Code	Size	Pack	Carton
602.10.00	RBM Ø 10	10	100
602.12.00	RBM Ø 12	10	100
602.14.00	RBM Ø 14	10	100
602.15.00	RBM Ø 15	10	100
602.16.00	RBM Ø 16	10	100

Standard RBM thread W 24.5x19 F
Patent n° TO2001U000071

029

71



Compression fitting for polyethylene pipe.

Brass nut, core and pipe clamping ogive.
Nickel plated nut.
Elastomer seal ring.
Standard RBM threaded F connection.

- Max operating temperature 95 °C
- Max operating pressure 10 Bar

Polyethylene pipe fitting
Raccord pour tube polyéthylène
Фитинг для полиэтиленовых труб
Racord pentru conductă de polietilenă
Adaptador Standard RBM para tubo de polietileno
Anschlüsse für Polyethylenrohr

Code	Size	Pack	Carton
71.10.20	10,5x1,25	10	100
71.10.30	10x1,2	10	100
71.12.00	12x2	10	100
71.12.20	12x1,3	10	100
71.14.00	14x2	10	100
71.15.00	15x2,5	10	100
71.15.10	15x2	10	100
71.16.00	16x2	10	100
71.16.20	16x1,5	10	100
71.16.30	16x2,7	10	100
71.16.40	16x2,2	10	100
71.17.00	17x2	10	100
71.18.00	18x2,5	10	100
71.18.30	18x2	10	100
71.20.10	20x2	10	100
71.20.40	20x2,8	10	100

Standard RBM thread W 24.5x19 F
Size: Outside Ø x pipe thickness

029

3597



Compression fitting for polyethylene pipes, specifically designed for 3201 - 3202 - 3615 - 3616 series manifolds.

Brass nut, core and pipe clamping ogive.
Nickel plated nut.
Elastomer seal ring.
Standard RBM threaded F connection.

- Max operating temperature 95 °C
- Max operating pressure 10 Bar

Fitting to be used exclusively with compact modular brass manifolds, centre-to-centre distance 37mm 3201- 3202 - 3615 - 3616 series.

Fitting for polyethylene pipe specifically designed for 3201 - 3202 - 3615 - 3616 series manifolds.
Raccord pour tube polyéthylène spécifique pour collecteurs série 3201 - 3202 - 3615 - 3616
Фитинг для полиэтиленовой трубы, специальный для коллекторов серии 3201 - 3202 - 3615 - 3616
Racord pentru tub din polietilenă specific pentru colectoare seria 3201 - 3202 - 3615 - 3616
Empalme para tubo de polietileno específico para colectores de la serie 3201 - 3202 - 3615 - 3616
Anschluss für spezifischen Polyethylenschlauch für Kollektoren der Serie 3201 - 3202 - 3615 - 3616

Code	Size	Pack	Carton
3597.16.00	16x2	10	100
3597.17.00	17x2	10	100

Standard RBM thread W 24.5x19 F - int. 37 mm
Size: Outside Ø x pipe thickness

037

122



029

Compression fitting for polyethylene pipe.

Brass nut, core and pipe clamping ogive.
Nickel plated nut.
Elastomer seals.
Standard RBM threaded F connection.

- Max operating temperature 95 °C
- Max operating pressure 10 Bar

CSTB (certification only valid if used with CSTB certified RBM KILMA-FLEX PE-RT pipe).

Polyethylene pipe fitting
Raccord pour tube polyéthylène
Фитинг для полиэтиленовых труб
Racord pentru conductă de polietilenă
Adaptador Standard RBM para tubo de polietileno
Anschlüsse für Polyethylenrohr

Code	Size	Pack	Carton
122.12.00	12x1,1	10	100
122.16.00	16x1,5	10	100
122.20.00	20x1,9	10	100

Standard RBM thread W 24.5x19 F
Size: Outside Ø x pipe thickness

70



029

Compression fitting for metal-plastic multilayer pipe.

Compatible with Q-Tec copper pipe in matching sizes. Respect the pipe flaring and gauging conditions.

Brass nut, core and pipe clamping ogive.
Nickel plated nut.
Elastomer seals.
Standard RBM threaded F connection.

- Max operating temperature 95 °C
- Max operating pressure 10 Bar

CSTB (only ø 16x2 - 20x2 / Certification only valid if used with CSTB certified RBM TITA-FIX pipe). - EN ISO 21003 2/10, 4/6, 5/6 bar

Fitting for metal-plastic multilayer pipe.
Raccord pour tube multicouche métal-plastique
Фитинг для многослойной металлопластиковой трубы
Racord pentru tub multistrat metal-plastic
Racor para tubo multicapa metal-plástico
Verbindungsstück für Mehrschichtverbundrohr Metall-Kunststoff

Code	Size	Pack	Carton
70.12.90	12x1,9	10	100
70.14.00	14x2	10	100
70.14.90	14,4x2,2	10	100
70.16.00	16x2	10	100
70.16.10	16x2,5	10	100
70.16.20	16x2,25	10	100
70.16.30	16,2x2,6	10	100
70.16.90	16,4x2,2	10	100
70.17.10	17x2	10	100
70.17.30	17x3	10	100
70.17.40	17,2x3	10	100
70.18.00	18x2	10	100
70.20.00	20x2	10	100
70.20.10	20x2,5	10	100
70.20.20	20x2,25	10	100
70.20.30	20x2,9	10	100

Standard RBM thread W 24.5x19 F
Size: Outside Ø x pipe thickness

029

1216



029

Compression fitting for metal-plastic multilayer pipe.

Brass nut and pipe clamping ogive.
Nickel plated nut.
Technopolymer core.
Elastomer seal ring.
Standard RBM threaded F connection.

- Max operating temperature 95 °C
- Max operating pressure 10 Bar

Fitting for metal-plastic multilayer pipe, technopolymer core
Raccord pour tube multicouche métal-plastique âme en techno-polymère
Фитинг для многослойной металлопластиковой трубы с сердцевиной из технополимера
Racord pentru tub multistrat metal-plastic, miez din polimer tehnologic
Racor para tubo multicapa de metal-plástico núcleo de tecnopolímero
Anschlüsse für mehrschichtiges Metall-Kunststoff-Rohr Kern aus Technopolymer

Code	Size	Pack	Carton
1216.14.00	14x2	10	100
1216.16.00	16x2	10	100

Standard RBM thread W 24.5x19 F
Size: Outside Ø x pipe thickness

1944



037

Compression fitting for metal-plastic multilayer pipe.

Nickel plated brass nut.
Technopolymer core pipe clamping ogive.
Elastomer seals.
Standard RBM threaded connection.

- Max operating temperature 95 °C
- Max operating pressure 10 Bar

Fitting for multilayer pipe. technopolymer core and ogive
Raccord pour tube multicouche âme et ogive en technopolymère
Фитинг для металлопластиковых труб, цанговый штуцер из технополимера
Racord pentru conductă din polietilenă multistrat cu miezul din tehno-polimer
Adaptador Standar RBM para tubo multicapa con base y anillo en tecnopolímero
Anschlüsse für mehrschichtiges Polyethylenrohr Kern aus Technopolymere

Code	Size	Pack	Carton
1944.16.00	16x2	10	100

Standard RBM thread W 24.5x19 F
Size: Outside Ø x pipe thickness

826



032

Press fitting for metal-plastic multilayer pipe.

Multi-clamp fitting.
Compatible with clamps series:
- TH, H, U, B for Ø 14x2;
- TH, H, U, B, F for Ø 16x2 - 18x2 and 20x2;
- TH, H, B for Ø 26x3;
- TH, H for Ø 32x3;
- TH for Ø 40x3.5 - 50x4 e 63x4.5

Externally nickel-plated brass body
Elastomer seals
Stainless steel pipe clamping bush
Dielectric pipe clamp cover in PE
Standard RBM threaded connection W24.5x19F
Max operating temperature 95 °C
Max operating pressure 10 Bar

CSTB (only ø 16x2 - 20x2 - 26x3 - 32x3 / Certification applicable only if matched with CSTB certified "RBM TITA-FIX" pipe). - EN ISO 21003 2/10, 4/6, 5/6 bar

Press fitting for multilayer pipe
Raccord à sertir pour tube multicouche
Пресс-фитинг для металлопластиковых труб
Racord cu presare pentru conductă din polietilenă multistrat
Racor Press Fitting recto con tuerca loca para conexión Standard RBM, para tubo multicapa
Steckanschluss für mehrschichtige Polyethylenrohr

Code	Size A	Size B	Pack	Carton
826.14.00	14x2	RBM	10	100
826.16.00	16x2	RBM	10	100
826.18.00	18x2	RBM	10	100
826.20.00	20x2	RBM	10	100

Standard RBM thread W 24.5x19 F
Size A: Outside Ø x pipe thickness

5



Heavy three-piece elbow fitting.

Nickel brass body.
O-Ring seal in FKM.
Threaded connections MF UNI-EN-ISO 228.

- Max operating temperature 180 °C
- Max operating pressure 10 Bar

Suitable for gas, air, hot and cold drinking water, hydrocarbons, solar systems.

Three-piece elbow fitting heavy series
Raccord en trois pièces de type courbé série lourde
Угловое соединение из 3-х частей тяжелая серия
Racord din trei bucăți de tip curbat seria debit masiv
Racor 3 piezas curvo Macho-Hembra rosca Gas, Niquelado
Anschluss aus drei Teilen bogenartig schwere Ausführung

Code	Size	Pack	Carton
5.03.1B	3/8″	10	60
5.04.1B	1/2″	10	60
5.05.1B	3/4″	10	40
5.06.1B	1″	10	40
5.07.1B	1″1/4	8	32
5.08.1B	1″1/2	4	16
5.09.1B	2″	2	8

040

58



Fitting for pipe connection to manifold / Heavy three-piece straight fitting.

Nickel brass body.
O-Ring seal in FKM.
Threaded connections MF UNI-EN-ISO 228.

- Max operating temperature 180 °C
- Max operating pressure 10 Bar

Suitable for gas, air, hot and cold drinking water, hydrocarbons, solar systems.

Three-piece straight fitting heavy series
Raccord en trois pièces de type droit série lourde
Прямое соединение из 3-х частей тяжелая серия
Racord din trei bucăți de tip drept seria debit masiv
Racor 3 piezas recto Macho-Hembra rosca Gas, Niquelado
Anschluss aus drei Teilen gradlinienartig schwere Ausführung

Code	Size	Pack	Carton
58.03.00	3/8″	10	60
58.04.00	1/2″	10	60
58.05.00	3/4″	10	40
58.06.00	1″	10	40
58.07.00	1″1/4	8	32
58.08.00	1″1/2	5	20
58.09.00	2″	2	8

040

5



Three-piece elbow fitting.

Brass body.
O-Ring seal in FKM.
Threaded connections MF UNI-EN-ISO 228.

- Max operating temperature 180 °C
- Max operating pressure 10 Bar

Suitable for gas, air, hot and cold drinking water, hydrocarbons, solar systems.

Elbow type three-piece fitting
Raccord en trois pièces type courbé
Угловое соединение из 3-х частей
Racord din trei piese de tip curbat
Racor 3 piezas curvo Macho-Hembra rosca Gas
Anschluss aus drei Teilen bogenartig

Code	Size	Pack	Carton
5.03.10	3/8″	10	60
5.04.10	1/2″	10	60
5.05.10	3/4″	10	40
5.06.10	1″	10	40
5.07.10	1″1/4	8	32
5.08.10	1″1/2	4	16
5.09.10	2″	2	8

040

6



Three-piece straight fitting.

Brass body.
O-Ring seal in FKM.
Threaded connections MF UNI-EN-ISO 228.

- Max operating temperature 180 °C
- Max operating pressure 10 Bar

Straight type three-piece fitting
Raccord en trois pièces type droit
Прямое соединение из 3-х частей
Racord din trei piese de tip drept
Racor 3 piezas recto Macho-Hembra rosca Gas
Anschluss aus drei Teilen gradlinienartig

Code	Size	Pack	Carton
6.03.10	3/8"	10	60
6.04.10	1/2"	10	60
6.05.10	3/4"	10	40
6.06.10	1"	10	40
6.07.10	1"1/4	8	32
6.08.10	1"1/2	5	20
6.09.10	2"	2	8

Suitable for gas, air, hot and cold drinking water, hydrocarbons, solar systems.

040

97



Fitting for pipe connection to manifold / Three-piece straight fitting, with 5 mm off-centre adjustment.

Nickel brass body.
Elastomer O-Ring seal.
Threaded connections MF UNI-EN-ISO 228.

- Max operating temperature 110 °C
- Max operating pressure 10 Bar

Off-centre three-piece fitting
Raccord en trois pièces à excentrique
Эксцентрический фитинг из 3-х частей тяжелая серия
Racord din trei bucăți cu excentric
Racor 3 piezas excéntrico Macho-Hembra rosca Gas, niquelado
Anschluss aus drei Teilen konzentrisch

Code	Size	Pack	Carton
97.05.00	3/4"	10	10
97.06.00	1"	10	10

040

72



Three-piece MM joint straight fitting

Nickel brass body.
Elastomer O-Ring seal on connections.
Threaded connections MM UNI-EN-ISO 228.

- Max operating temperature 110 °C
- Max operating pressure 10 Bar

Three-piece mm joint fitting
Raccord d'union mm en trois pièces
Соединительный фитинг нар.-нар. из трех частей
Racord de îmbinare Mamă-Mamă din trei bucăți
Racor de unión mm en tres piezas
Vereinigungsanschluss mm aus drei Teilen

Code	Size A	Size B	Pack	Carton
72.04.00	1/2"	1/2"	25	25
72.05.00	3/4"	3/4"	10	40
72.06.00	1"	1"	10	40
72.06.50	1"	1"1/4	6	24
72.07.00	1"1/4	1"1/4	10	10
72.08.00	1"1/2	1"1/2	5	5
72.09.00	2"	2"	2	2

040

1100



Three-piece MM joint fitting with OR seal on connections.

Nickel-plated brass body
Elastomer o-Ring seal on the connections
Threaded connections MM UNI-EN-ISO 228

- Max operating temperature 100 °C
- Max operating pressure 10 Bar

Joint fitting mm with OR seals
Raccord d'union mm avec joints toriques
Соединительный фитинг нар.-нар. с кольцевым уплотнителем
Racord de îmbinare Mamă-Mamă cu garnituri OR
Racor de unión mm con retenciones or
Vereinigungsanschluss mm mit OR-Dichtung

Code	Size	Pack	Carton
1100.06.00	1"	10	10

Use for connecting manifolds to zone valves. Used on RBM products with prearrangement on OR seal (filters, pressure reducing valves, etc…).

040

164



40mm extension for copper pipe.

Nickel brass body.
Elastomer seals.
Standard RBM threaded F connection.

- Max operating temperature 95 °C
- Max operating pressure 10 Bar

40mm extension for copper pipe
Rallonge 40 mm pour tube en cuivre
Удлинитель 40 мм для медной трубы
Prelungitor pentru conductă de cupru 40mm
Prolongador 40mm conexión Standard RBM
Verlängerung für Kupferrohr 40 mm

Code	Size	Pack	Carton
164.04.00	RBM Ø 10	10	40
164.04.10	RBM Ø 12	10	40
164.04.20	RBM Ø 14	10	40

Standard RBM thread W 24.5x19 F

040

164



40mm extension for multilayer polyethylene pipe.

Nickel brass body.
Elastomer seals.
Standard RBM threaded F connection.

- Max operating temperature 95 °C
- Max operating pressure 10 Bar

40mm extension for multilayer polyethylene pipe
Rallonge de 40 mm pour tuyau multicouche en polyéthylène
Удлинитель 40 мм для многослойных полиэтиленовых труб
Prelungitor de 40 mm pentru tubul din polietilenă cu straturi multiple
Prolongación 40 mm para tubo polietileno multicapa
Verlängerung 40 mm für Leitung aus mehrschichtigem Polyethylenrohr

Code	Size	Pack	Carton
164.16.20	16x2	10	40

RBM standard thread W 24.5x19F F

040

81



In-line fitting for joining copper, polyethylene and multilayer metal-plastic pipes.

Nickel brass body.
Standard RBM threaded M connection.

- Max operating temperature 110 °C
- Max operating pressure 10 Bar

Intermediate straight fitting
Raccord droit intermédiaire
Прямой промежуточный фитинг
Racord drept intermediar
Manguito para adaptadores Standard RBM
Gerade Anschluss Zwischenstück

Code	Size A	Size B	Pack	Carton
81.00.00	RBM	RBM	10	10

Standard RBM thread W 24.5x19 F

040

83



In-line fitting for joining copper, polyethylene and multilayer metal-plastic pipes.

Nickel brass body.
Threaded connection:
M standard RBM.
M UNI-EN-ISO 228.

- Max operating temperature 110 °C
- Max operating pressure 10 Bar

Straight fitting with male connection
Raccord droit avec raccord mâle
Прямой фитинг с наружной резьбой
Racord drept cu prindere de tip tată
Racor recto Macho – Adaptador RBM
Gerade Anschluss mit Steckverbindung

Code	Size A	Size B	Pack	Carton
83.03.00	RBM 3/8" M	RBM	10	10
83.04.00	RBM 1/2" M	RBM	10	10

Standard RBM thread W 24.5x19 F

Adapter piece iron pipe valves for copper or plyethylene pipe.

040

3576



040

Copper pipe adapter for 1/2" iron connection valves.

Nickel-plated brass ogive presser.
Brass ogive and adapter.
Threaded connection M UNI-EN-ISO 228.

- Max operating temperature 110 °C
- Max operating pressure 10 Bar

Copper pipe adapter for 1/2" iron connection valves
Adaptateur tube en cuivre pour vannes raccord fer de 1/2"
Адаптер медной трубы для клапанов с железным креплением 1/2"
Adaptator pentru tubul din cupru pentru supape cu prindere filet interior 1/2"
Adaptador del tubo de cobre para válvulas de conexión de hierro de 1/2"
Kupferrohr-Adapter für Ventile mit Eisenanschluss zu 1/2"

Code	Size A	Size B	Pack	Carton
3576.10.50	1/2"	Ø 10	10	100
3576.12.50	1/2"	Ø 12	10	100
3576.14.50	1/2"	Ø 14	10	100

3174



040

Straight rotary fitting.

Threaded connections FF UNI-EN-ISO 228.

Fitting for filter/boiler connection

Straight rotary fitting
Raccord écrou libre droit
Поворотный прямой фитинг
Racord rotativ drept
Racor giratorio recto
Anschluss, drehbar gerade

Code	Size	Pack	Carton
3174.05.00	3/4"	1	6

3174



040

Curved rotary fitting.

Threaded connections FF UNI-EN-ISO 228.

Specific fitting for connection of MG1 to boilers with front connection (e.g. Vaillant model).

Curved rotary fitting
Raccord écrou libre courbe
Поворотный изогнутый фитинг
Racord rotativ curbat
Racor giratorio curvo
Anschluss, drehbar gekrümmt

Code	Size	Pack	Carton
3174.05.10	3/4"	1	6

3174



040

Flexible extendible fitting.

Threaded connections MF UNI-EN-ISO 228.
L 80 ÷ 120 mm

Fitting for filter connection

Flexible extendible fitting
Raccord flexible extensible
Гибкий растяжимый фитинг
Racord flexibil extensibil
Racor flexible extensible
Anschluss flexibel verlängerbar

Code	Size	Pack	Carton
3174.05.30	3/4"	1	6

246



Spanner for fitting with Euroconus thread.

Square 1/2" connection, for combination or torque wrenches, to easily tighten fittings in any position.

Spanner for Euroconus fitting
Clé pour raccord Euroconus
Ключ для фитинга Euroconus
Cheie pentru racord Euroconus
Llave hexagonal abierta para adaptadores Euroconus
Schlüssel für Euroconus-Anschluss

Code	Size	Pack	Carton
246.00.00	CH30	2	26

041

263



Compression fitting for annealed copper pipe.

Brass ogive.
Nickel plated brass nut.
Elastomer seal ogive.
Euroconus F G3/4" threaded connection.

- Max operating temperature 95 °C
- Max operating pressure 10 Bar

Copper pipe fitting
Raccord pour tube en cuivre
Фитинг для медных труб
Racord pentru conductă de cupru
Adaptador Standard RBM para tubo de cobre recocido
Anschluss für Kupferrohr

Code	Size	Pack	Carton
263.12.20	Ø 12	10	100
263.15.20	Ø 15	10	100

Euroconus G 3/4" thread UNI-EN-ISO 228

029

361



Compression fitting for annealed copper pipe.

Brass ogive.
Nickel plated brass nut.
Elastomer seal ogive.
Euroconus F G3/4" threaded connection.

- Max operating temperature 95 °C
- Max operating pressure 10 Bar

Copper pipe fitting
Raccord pour tube en cuivre
Фитинг для медных труб
Racord pentru conductă de cupru
Adaptador Standard RBM para tubo de cobre recocido
Anschluss für Kupferrohr

Code	Size A	Size B	Pack	Carton
361.10.00	G 3/4"	Ø 10	10	100
361.12.00	G 3/4"	Ø 12	10	100
361.14.00	G 3/4"	Ø 14	10	100
361.15.00	G 3/4"	Ø 15	10	100
361.16.00	G 3/4"	Ø 16	10	100
361.18.00	G 3/4"	Ø 18	10	100

Euroconus G 3/4" thread UNI-EN-ISO 228

029

217



Compression fitting for polyethylene pipe.

Brass ogive.
Nickel plated brass nut.
Elastomer seal ring.
Euroconus F G3/4" threaded connection.

- Max operating temperature 95 °C
- Max operating pressure 10 Bar

Polyethylene pipe fitting
Raccord pour tube polyéthylène
Фитинг для полиэтиленовых труб
Racord pentru conductă de polietilenă
Adaptador Standard RBM para tubo de polietileno
Anschlüsse für Polyethylenrohr

Code	Size	Pack	Carton
217.12.00	12x2	10	100
217.15.00	15x2	10	100
217.15.10	15x2,5	10	100
217.16.00	16x2	10	100
217.16.10	16x2,2	10	100
217.17.00	17x2	10	100
217.18.00	18x2	10	100
217.20.00	20x2	10	100
217.20.10	20x2,8	10	100
217.21.00	21x2,5	10	100

Euroconus G 3/4" thread UNI-EN-ISO 228
Size: Outside Ø x pipe thickness

029

123



Compression fitting for polyethylene pipe.

Brass ogive.
Nickel plated brass nut.
Elastomer seal ring.
Euroconus F G3/4" threaded connection.

- Max operating temperature 95 °C
- Max operating pressure 10 Bar

CSTB (certification only valid if used with CSTB certified RBM KILMA-FLEX PE-RT pipe).

Polyethylene pipe fitting
Raccord pour tube polyéthylène
Фитинг для полиэтиленовых труб
Racord pentru conductă de polietilenă
Adaptador Standard RBM para tubo de polietileno
Anschlüsse für Polyethylenrohr

Code	Size	Pack	Carton
123.12.00	12x1,1	10	100
123.16.00	16x1,5	10	100
123.20.00	20x1,9	10	100

Euroconus G 3/4" thread UNI-EN-ISO 228
Size: Outside Ø x pipe thickness

029

224



Compression fitting for metal-plastic multilayer pipe.

Compatible with Q-tec copper pipe with matching sizes.
Respect pipe flaring and gauging conditions.

Brass ogive.
Nickel plated brass nut.
Elastomer seal ring.
Euroconus F G3/4" threaded connection.

- Max operating temperature 95 °C
- Max operating pressure 10 Bar

CSTB (only ø 16x2 - 20x2 / Certification only valid if used with CSTB certified RBM TITA-FIX pipe). - EN ISO 21003 2/10, 4/6, 5/6 bar

Fitting for metal-plastic multilayer pipe.
Raccord pour tube multicouche métal-plastique
Фитинг для многослойной металлопластиковой трубы
Racord pentru tub multistrat metal-plastic
Racor para tubo multicapa metal-plástico
Verbindungsstück für Mehrschichtverbundrohr Metall-Kunststoff

Code	Size	Pack	Carton
224.14.00	14x2	10	100
224.16.00	16x2	10	100
224.16.10	16,2x2,6	10	100
224.16.20	16x2,25	10	100
224.17.00	17x2	10	100
224.18.00	18x2	10	100
224.20.00	20x2	10	100
224.20.30	20x2,25	10	100
224.20.10	20x2,5	10	100
224.20.20	20x2,9	10	100

Euroconus G 3/4" thread UNI-EN-ISO 228
Size: Outside Ø x pipe thickness
(-) price on the RBM Kilma price list

029

963



Press fitting for metal-plastic multilayer pipe.

Multi-clamp fitting.
Compatible with clamps series:
- TH, H, U, B for Ø 14x2;
- TH, H, U, B, F for Ø 16x2 - 18x2 and 20x2;
- TH, H, B for Ø 26x3;
- TH, H for Ø 32x3;
- TH for Ø 40x3.5 - 50x4 e 63x4.5

Externally nickel-plated brass body
Elastomer seals
Stainless steel pipe clamping bush
Dielectric pipe clamp cover in PE
Euroconus threaded connection G3/4" UNI-EN-ISO 228
Max operating temperature 95 °C
Max operating pressure 10 Bar

CSTB (only ø 16x2 - 20x2 - 26x3 - 32x3 / Certification applicable only if matched with CSTB certified "RBM TITA-FIX" pipe). - EN ISO 21003 2/10, 4/6, 5/6 bar

Press fitting for multilayer pipe
Raccord à sertir pour tube multicouche
Пресс-фитинг для металлопластиковых труб
Racord cu presare pentru conductă din polietilenă multistrat
Racor Press Fitting recto con tuerca loca para conexión Standard RBM, para tubo multicapa
Steckanschluss für mehrschichtige Polyethylenrohr

Code	Size A	Size B	Pack	Carton
963.16.30	16x2	Euroconus	10	100
963.18.30	18x2	Euroconus	10	100
963.20.30	20x2	Euroconus	10	100
963.26.30	26x3	Euroconus	10	50

Euroconus G 3/4" thread UNI-EN-ISO 228
Size A: Outside Ø x pipe thickness
(-) price on RBM Tita-fix pricelist

032

311



Y-shaped fitting to split copper, polyethylene and multilayer metal-plastic circuits.

Nickel brass body.
Elastomer seals.
Standard RBM rotary threaded connection W24.5x19F.
Standard RBM split threaded connections W24.5x19F.

- Max operating temperature 100 °C
- Max operating pressure 10 Bar

Y-shaped fitting
Raccord en Y
Фитинг У-образный
Racord în formă de Y
Racor en Y para desdoblar una conexión Standar RBM
Y-Anschluss

Code	Size A	Size B	Pack	Carton
311.05.00	G 3/4"	EK	10	10

Standard RBM thread W 24.5x19 F

Allows to split circuits deriving from RBM manifolds.

040

222

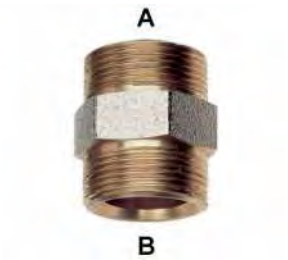

In-line fitting for joining copper, polyethylene and multilayer metal-plastic pipes.

Nickel brass body.
Threaded connections:
Euroconus M G3/4".
M 1/2" UNI-EN-ISO 228.

- Max operating temperature 110 °C
- Max operating pressure 10 Bar

Straight fitting
Raccord droit
Прямой фитинг
Racord drept
Manguito para adaptadores Euroconus
Gerader Anschluss

Code	Size A	Size B	Pack	Carton
222.05.10	G 3/4"	Euroconus	10	100
222.05.00	G 1/2"	Euroconus	10	100

Euroconus G 3/4" thread UNI-EN-ISO 228

040

42



Blind cap for manifold ways.

Nickel brass body.
PTFE seal.
Standard RBM threaded F connection.

- Max operating temperature 110 °C
- Max operating pressure 10 Bar

Blind cap - RBM
Bouchon aveugle - RBM
Глухая заглушка - RBM
Dop orb - RBM
Tapón Hembra - para conexión Standard RBM
Blindkappe - RBM

Code	Size	Pack	Carton
42.00.00	RBM	10	40

Standard RBM thread W 24.5x19 F

040

240



Blind cap for manifold ways.

Nickel brass body.
PTFE seal.
Euroconus F G3/4" threaded connection.

- Max operating temperature 110 °C
- Max operating pressure 10 Bar

Blind plug - G 3/4"
Bouchon aveugle - G 3/4"
Заглушка - G 3/4"
Capac orb - G 3/4"
Tapón ciego - G 3/4"
Blindkappe - G 3/4"

Code	Size	Pack	Carton
240.05.00	G 3/4"	10	40

Euroconus G 3/4" thread UNI-EN-ISO 228

040

242



Blind cap for manifold ways.

Brass body.
Elastomer seal.
Threaded connection M UNI-EN-ISO 228.

- Max operating temperature 110 °C
- Max operating pressure 10 Bar

Blind plug - G 1/2" M
Bouchon aveugle - G 1/2" M
Заглушка - G 1/2" НАРУЖ.
Capac orb - G 1/2" M
Tapón ciego - G 1/2" M
Blindkappe - G 1/2" M

Code	Size	Pack	Carton
242.04.00	1/2"	10	100

Used for manifolds with female G 1/2" junction female connections (code 35.0X.40).

040

2944



Blind cap for fittings with standard RBM threaded connection.

Brass body.
Standard RBM threaded M connection.

- Max operating temperature 110 °C
- Max operating pressure 10 Bar

Blind cap for RBM fittings
Bouchon aveugle pour raccords RBM
Глухая заглушка для фитингов RBM
Bușon orb pentru racorduri RBM
Tapón Macho para conexión Standard RBM
Blindkappe für Anschlüsse RBM

Code	Size	Pack	Carton
294.40.04	RBM	1	1

Standard RBM thread W 24.5 x 19 F

For testing system.

040

57



Extension and reduction for RBM connection.

Nickel brass body.
PTFE seal.
Threaded MF standard RBM connection.

- Max operating temperature 110 °C
- Max operating pressure 10 Bar

Extension and reduction for RBM connection.
Rallonge et réduction pour raccord RBM
Переходник для фитинга RBM
Extindere și seducție pentru prindere RBM
Extensión y Reducción Standard RBM - Standard RBM
Erweiterung und reduzierstück für Anschluss RBM

Code	Size	Pack	Carton
57.16.00*	RBM	10	100
57.18.00**	RBM	10	100

**Lengthens the standard RBM connection by 10 mm*
***Makes it possible to use Ø18 copper pipes*

040

43



Fitting for side connection of valve to manifold.

Nickel brass body.
PTFE seal.
Threaded F standard RBM connection F UNI-EN-ISO 228.

- Max operating temperature 110 °C
- Max operating pressure 10 Bar

Fitting for side connection of manifold valve
Raccord pour la connexion latérale de la vanne au collecteur
Фитинг для бокового соединения клапана с коллектором
Racord pentru conectarea laterală a supapei la colector
Racor Hembra Standard RBM – Hembra rosca Gas
Anschluss für die seitliche Verbindung des Ventils an den Sammler

Code	Size	Pack	Carton
43.03.00	RBM 3/8"	10	100
43.04.00	RBM 1/2"	10	100

Standard RBM thread W 24.5x19 F

040

45



Pipe connection junction.

Nickel brass body.
Threaded connections MF UNI-EN-ISO 228.

- Max operating temperature 110 °C
- Max operating pressure 10 Bar

Connection junction
Raccord de raccordement
Соединительный ниппель
Nipluri de racordare
Racor Macho-Hembra rosca Gas
Verbindungsnippel

Code	Size	Pack	Carton
45.05.00	3/4"	10	100
45.06.00	1"	10	100

040

42



Blind head cap for manifolds.

Nickel brass body.
PTFE seal.
Threaded connection F UNI-EN-ISO 228.

- Max operating temperature 110 °C
- Max operating pressure 10 Bar

Blind head cap
Bouchon de tête aveugle
Глухая заглушка
Buşon de cap orb
Tapón Hembra conexión rosca Gas
Kappe mit Blindkopf

Code	Size	Pack	Carton
42.05.00	3/4"	10	100
42.06.00	1"	10	100
90.08.00	1"1/2	4	40

040

42



Perforated head cap for manifolds.

Nickel brass body.
PTFE seal.
Connection to manifold F UNI-EN-ISO 228.
F 3/8” head connection UNI-EN-ISO 228.

- Max operating temperature 110 °C
- Max operating pressure 10 Bar

Perforated head cap
Bouchon de tête percé
Заглушка с отверстием
Buşon de cap găurit
Reducción Hembra-Hembra rosca Gas
Kappe mit gelochtem Kopf

Code	Size	Ways	Pack	Carton
42.05.30	G 3/8”	x3/4”	10	100
42.06.30	G 1”	x3/8”	10	100

040

43



Head connection for manifolds with copper or polyethylene fitting connection.

Nickel brass body.
PTFE seal.
Threaded connections:
M standard RBM.
F UNI-EN-ISO 228.

- Max operating temperature 110 °C
- Max operating pressure 10 Bar

Head connection for copper or polyethylene fitting
Raccord de tête
pour raccord tube en cuivre ou polyéthylène
Переходник для присоединения фитинга для полиэтиленовых и медных труб
Prindere de cap pentru racord din cupru sau polietilenă
Racor Macho Standard RBM – Hembra rosca Gas
Kopfbefestigung für Kupfer- oder Polyethylenanschluss

Code	Size	Pack	Carton
43.05.00	RBM 3/4”	10	100
43.06.00	RBM 1”	10	100

Standard RBM thread W 24.5x19 F

040

56



Blind head cap for manifolds.

Nickel brass body.
PTFE seal.
Threaded connection M UNI-EN-ISO 228.

- Max operating temperature 110 °C
- Max operating pressure 10 Bar

Perforated head cap for manifolds
Bouchon de tête percé pour collecteurs
Заглушка с отверстием
Buşon de cap găurit
Reducción Hembra-Hembra rosca Gas
Kappe mit gelochtem Kopf

Code	Size	Pack	Carton
56.05.00	3/4”	10	100
56.06.00	1”	10	100
56.07.00	1”1/4	10	100

040

56



Perforated head cap for manifolds.

Nickel brass body.
PTFE seal.
Connection to manifold M UNI-EN-ISO 228.
Head connection F 3/8" UNI-EN-ISO 228."

- Max operating temperature 110 °C
- Max operating pressure 10 Bar

Perforated head cap
Bouchon de tête percé
Заглушка с отверстием
Buşon de cap găurit
Reducción Hembra-Hembra rosca Gas
Kappe mit gelochtem Kopf

Code	Size	Pack	Carton	€
56.05.30	3/4”	10	100	**4,92**
56.06.30	1”	10	100	**5,40**

040

57



Head connection for manifolds with copper or polyethylene fitting connection.

Nickel brass body.
PTFE seal.
Threaded connections:
M standard RBM.
M UNI-EN-ISO 228.

- Max operating temperature 110 °C
- Max operating pressure 10 Bar

Head connection for copper or polyethylene fitting
Raccord de tête
pour raccord tube en cuivre ou polyéthylène
Переходник для присоединения фитинга для полиэтиленовых и медных труб
Prindere de cap pentru racord din cupru sau polietilenă
Racor Macho Standard RBM – Hembra rosca Gas
Kopfbefestigung für Kupfer- oder Polyethylenanschluss

Code	Size	Pack	Carton
57.05.00	RBM 3/4"	10	100
57.06.00	RBM 1"	10	100

Standard RBM thread W 24.5x19 F

040

178



Copper pipe adapter.

Nickel brass body.
Elastomer O-Ring seal.
Threaded connection M UNI-EN-ISO 228.

- Max operating temperature 110 °C
- Max operating pressure 10 Bar

Copper pipe adapter
Adaptateur pour tuyau en cuivre
Адаптер обжимной для медных труб
Adaptor pentru teava de cupru
Racor Transformador de conexión, con adaptador para tubo de cobre
Adapter für Kupferrohr

Code	Size A	Size B	Pack	Carton
178.04.00	1/2"	Ø 15	10	40
178.05.00	3/4"	Ø 22	10	40
178.06.00	1"	Ø 28	10	40

040

2441



Fastening spanner for adapters.

For use with fitting 178.XX.00

Fastening spanner for adapters
Clé de serrage pour adaptateurs
Ключ закрытия для адаптера
Cheie de strangere pentru adaptori
Llave hexagonal para enlaces de válvulas de radiador y detentores
Adapterschlüssel

Code	Size	Pack	Carton
244.10.05	Ø 15 22 28	1	10

041

1401



Compression fitting for copper pipe.

Nickel brass body.
Elastomer seals.
Standard RBM threaded F connection.

- Max operating temperature 110 °C
- Max operating pressure 10 Bar

Copper pipe fitting
Raccord pour tube en cuivre
Фитинг для медных труб
Racord pentru conductă de cupru
Adaptador Standard RBM para tubo de cobre recocido
Anschluss für Kupferrohr

Code	Size	Pack	Carton
1401.10.00	RBM Ø 10	10	100
1401.12.00	RBM Ø 12	10	100
1401.14.00	RBM Ø 14	10	100
1401.15.00	RBM Ø 15	10	100
1401.16.00	RBM Ø 16	10	100

Standard RBM thread W24.5x19F

029

139



Compression fitting for copper pipe.

Nickel brass body.
Elastomer seals.
F G1/2" threaded connection.

- Max operating temperature 110 °C
- Max operating pressure 10 Bar

jet-line

Tapered seat.
Used with extension lead code 164.04.X0 (see page 186)

Copper pipe fitting
Raccord pour tube en cuivre
Фитинг для медных труб
Racord pentru conductă de cupru
Adaptador Standard RBM para tubo de cobre recocido
Anschluss für Kupferrohr

Code	Size A	Size B	Pack	Carton
139.10.50	G 1/2"	Ø 10	10	100
139.12.50	G 1/2"	Ø 12	10	100
139.14.50	G 1/2"	Ø 14	10	100
139.15.50	G 1/2"	Ø 15	10	100

029

735



Compression fitting for polyethylene pipe, flat seat.

Nickel brass body.
Elastomer seals.
F G1/2" threaded connection.

- Max operating temperature 110 °C
- Max operating pressure 10 Bar

ACS
jet-line

Flat seat.

Fitting for polyethylene pipe, flat seat
Raccord pour tube en polyéthylène logement plat
Фитинг для полиэтиленовых труб плоское седло
Racord pentru conductă din polietilenă locaș plat
Adaptador G1/2" base plana para tubo en polietileno
Anschluss für Polyethylenrohr flacher Sitz

Code	Size	Pack	Carton
735.12.00	12x1,1	10	100
735.16.00	16x1,5	10	100
735.16.10*	16x2	10	100
735.16.20	16x2	10	100

**Can also be used for multilayer polyethylene pipe*
Thread F G 1/2"

029

2796



Compression fitting for metal-plastic multilayer pipe.

Nickel brass body.
Elastomer seals.
F G1/2" threaded connection.

- Max operating temperature 110 °C
- Max operating pressure 10 Bar

jet-line

Fitting for metal-plastic multilayer pipe.
Raccord pour tube multicouche métal-plastique
Фитинг для многослойной металлопластиковой трубы
Racord pentru tub multistrat metal-plastic
Racor para tubo multicapa metal-plástico
Verbindungsstück für Mehrschichtverbundrohr Metall-Kunststoff

Code	Size	Pack	Carton
2796.16.00	16x2	10	100

Thread F G 1/2"

029

140



Blind side cap.

Nickel brass body.
PTFE seals.
F G1/2" threaded connection.

- Max operating temperature 110 °C
- Max operating pressure 10 Bar

ACS
jet-line

Blind side cap
Bouchon latéral aveugle
Боковая глухая заглушка
Bușon lateral orb
Tapón Hembra para conexión G1/2"
Seitliche Blindkappe

Code	Size	Pack	Carton
140.04.00	G 1/2"	10	40

Thread F G 1/2"

Flat seat.

040


RBM
Brass

DIMENSIONAL DRAWINGS

COTES D'ENCOMBREMENT
ГАБАРИТНЫЕ ЧЕРТЕЖИ
DESENE - DIMENSIUNI DE OCUPARE A SPAȚIULUI
DIBUJOS DE DIMENSIONES TOTALES
ZEICHNUNGEN MIT ABMESSUNGEN

Dimensional drawings pag. 198



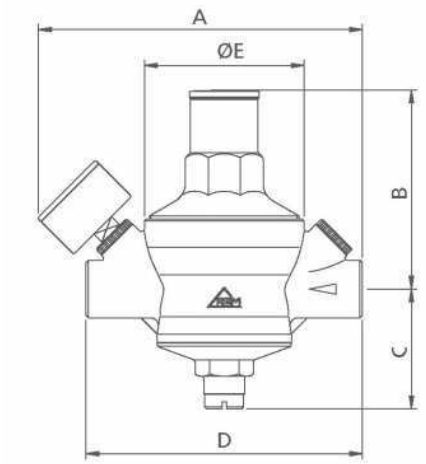

Code	Size	A mm	B mm	C mm	D mm	E mm
46.04.00	G 1/2"	158,5	96,5	56,5	135	78

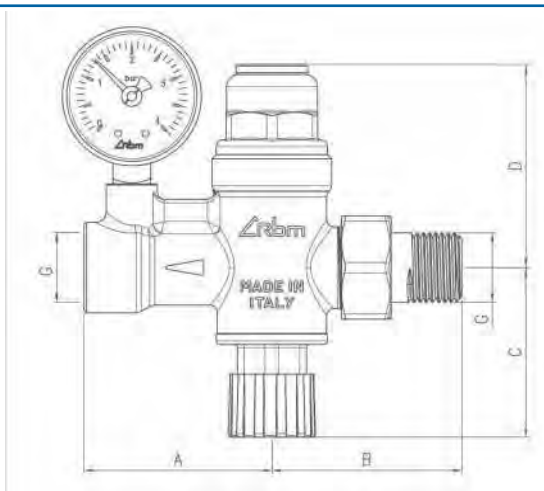

Code	Size	A mm	B mm	C mm	D mm
3153.04.00	G 1/2"	55,7	55	46	59,6

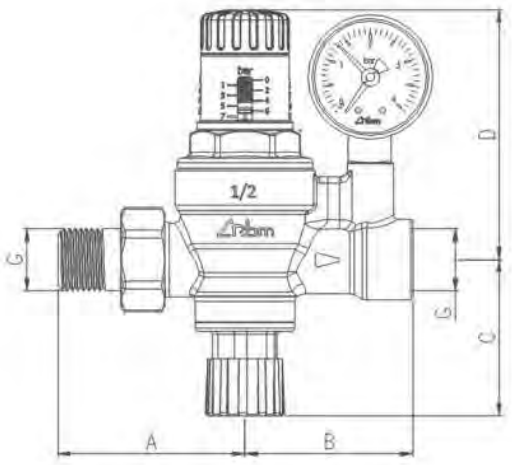

Code	Size	A mm	B mm	C mm	D mm
39.04.00	G 1/2"	61,5	55	51	81,8
39.05.00	G 3/4"	68	57,4	51	81,8

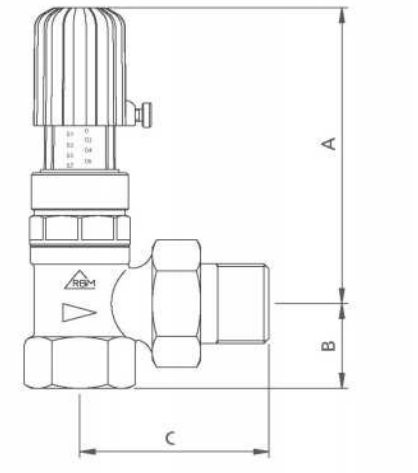

Code	Size	A mm	B mm	C mm
124.05.00	G 3/4"	98	28	62,5
124.06.00	G	98	33,5	67,5
124.07.00	G 1"1/4	133	39	81
124.22.00	Ø 22	98	36	41

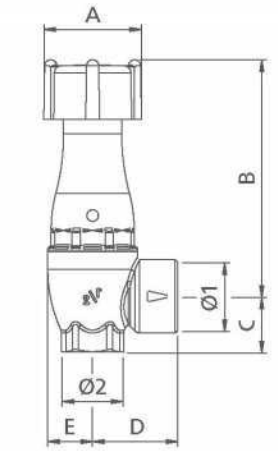

Code	Ø 1	Ø 2	A mm	B mm	C mm	D mm	E mm
605.04.X0	G 3/4"	G 1/2"	42	102	24	36,5	19,5
605.05.X0	G 1"	G 3/4"	42	140	29	46	27
605.06.X0	G 1"1/4	G 1"	56	157	34	55	31
605.07.X0	G 1"1/2	G 1"1/4	56	187	41	60	36

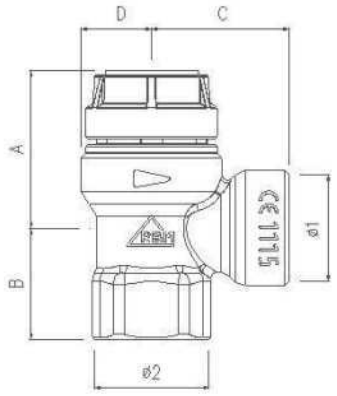

Code	Ø 1	Ø 2	A mm	B mm	C mm	D mm
351.04.XX	G 1/2"	G 1/2"	35,5	25	31	16
351.05.XX	G 3/4"	G 3/4"	35,5	28	34	16
352.04.XX	G 1/2"	G 1/2" M	35,5	27	31	16
352.05.XX	G 3/4"	G 1/2" M	35,5	29,7	33	15,5

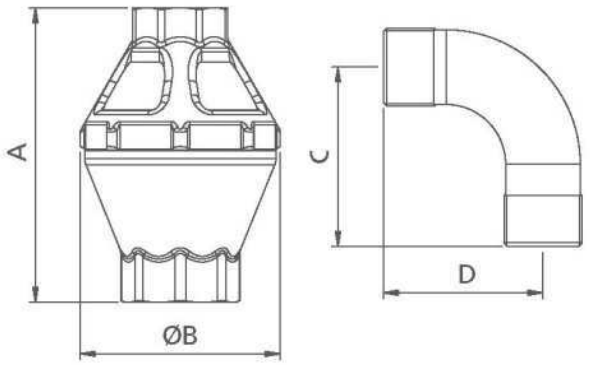

Code	Size	A mm	B mm	C mm	D mm
666.05.00	G 3/4"	98,5	67	60	53,5
666.06.00	G 1"	124	84,5	67,5	58
666.07.00	G 1"1/4	147	99	75	58
666.08.00	G 1"1/2	170	115	75	67

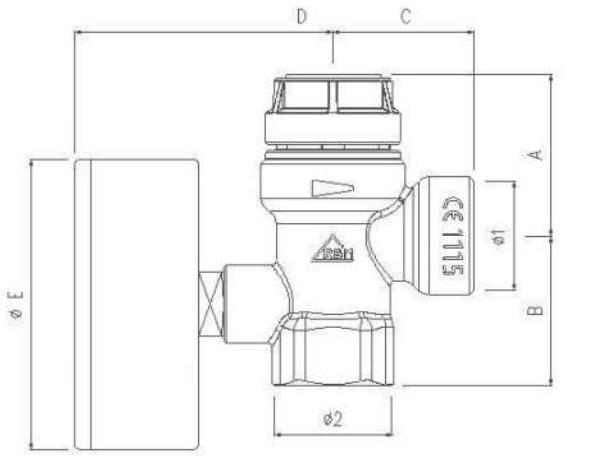

Code	Ø 1	Ø 2	A mm	B mm	C mm	D mm	E mm
353.04.XX	G 1/2"	G 1/2"	35,5	33	31	63,5	51,5
353.05.XX	G 3/4"	G 3/4"	35,5	40,5	34	63,5	51,5
354.04.XX	G 1/2"	G 1/2" M	35,5	35	31	63,5	51,5

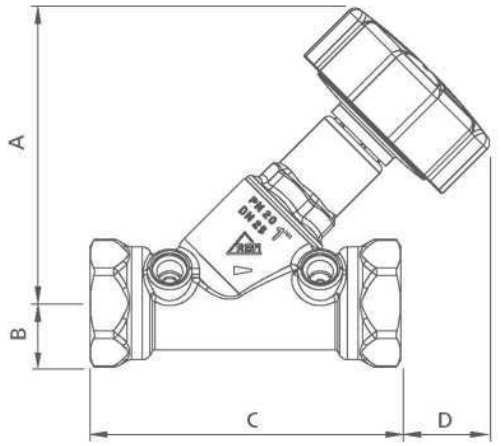

Code	Size	A mm	B mm	C mm	D mm
619.03.50	G 3/8"	84,5	12	89	25
619.04.50	G 1/2"	84	15	96	22
619.05.50	G 3/4"	85,6	17,8	97	21,5
619.06.50	G 1"	98	21,3	103,3	29,5
619.07.50	G 1"1/4	101	28	111	29
619.08.50	G 1"1/2	107	31	120	27
619.09.50	G 2"	115	37	132	21,7

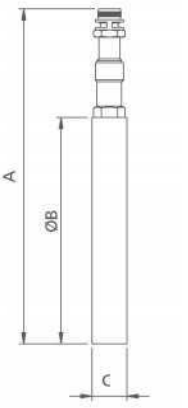

Code	Size	A mm	B mm	C mm
620.10.00	DN 65	191	129	20
620.11.00	DN 80	206	144	20
620.13.00	DN 100	226	164	20
620.14.00	DN 125	256	194	20
620.15.00	DN 150	282	220	20
620.17.00	DN 200	337	275	20
620.19.00	DN 250	393	331	20
620.21.00	DN 300	448	386	20

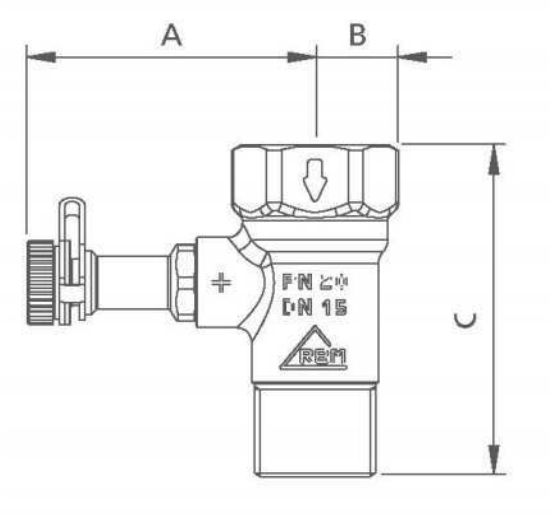

Code	Size	A mm	B mm	C mm
620.04.90	G 1/2" LF	49,5	14,5	57
620.04.50	G 1/2"	49,5	14,5	57
620.05.50	G 3/4"	51,5	18	59
620.06.50	G 1"	5,5	22,5	67,5
620.07.50	G 1"1/4	60	28	72
620.08.50	G 1"1/2	63	30,8	73,5
620.09.50	G 2"	69	37,2	82

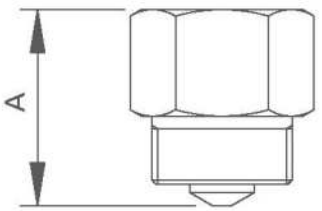

Code	Ø 1	Ø 2	A mm
38.04.10	G 1/2" F	G 1/2" M	23,5
38.03.70	G 3/8" F	G 3/8" M	28
38.04.70	G 3/8" F	G 1/2" M	23,5
38.04.50	G 1/2" F	G 1/2" M	23,5

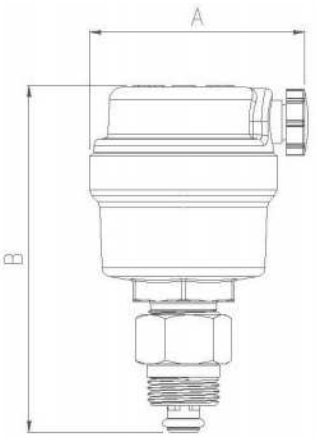

Code	Size	A mm	B mm
791.03.40	G 3/8"	50,6	78,3
791.04.40	G 1/2"	50,6	78,3

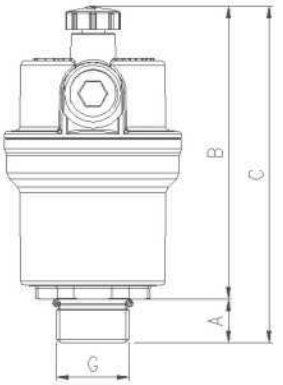

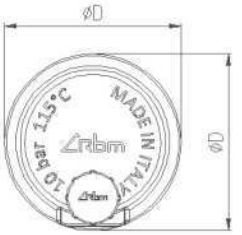

Code	Size	A mm	B mm	C mm	D mm
2828.03.10	G 3/8"	10	66,9	76,9	40,4
2828.04.00	G 1/2"	11,5	66,9	78,4	40,4

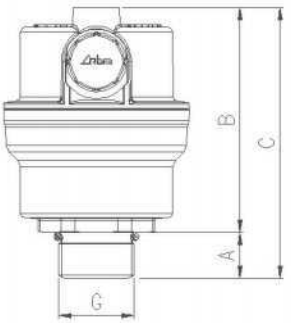

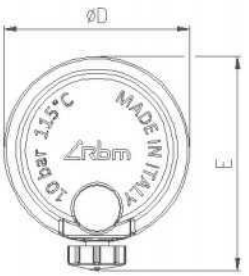

Code	Size	A mm	B mm	C mm	D mm	E mm
2827.03.X0	G 3/8"	10	45,8	55,8	40,4	46,3
2827.04.X0	G 1/2"	11,5	45,8	57,3	40,4	46,3

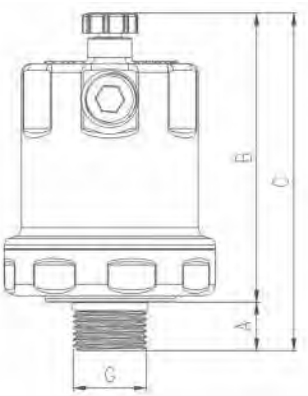



Code	Size	A mm	B mm	C mm	D mm
3574.03.00	G 3/8"	11	65,5	76,5	47,7
3574.04.00	G 1/2"	11,5	65,5	77	47,7
3574.05.00	G 3/4"	15	65,5	80,5	47,7



Code	Size	A mm	B mm
37.03.60	G 3/8"	47,8	109
37.04.60	G 1/2"	47,8	112
37.05.60	G 3/4"	47,8	114
37.06.60	G 1"	47,8	115

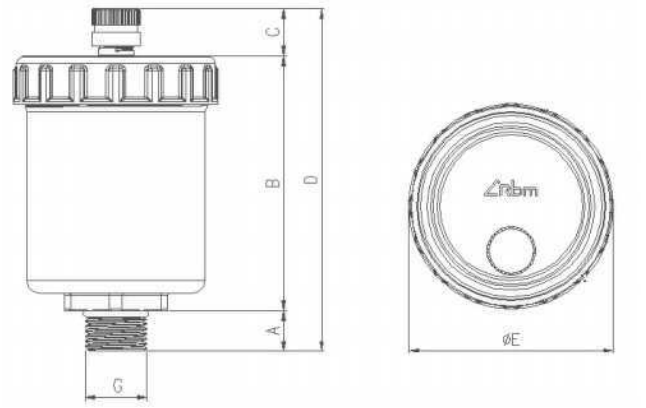

Code	Size	A mm	B mm	C mm	D mm	E mm
2836.04.00	G 1/2"	11,5	86,4	12,7	92,6	55
2840.03.00	G 3/8"	11	68,4	12,7	110,6	55
2840.04.00	G 1/2"	11,5	68,4	12,7	92,1	55

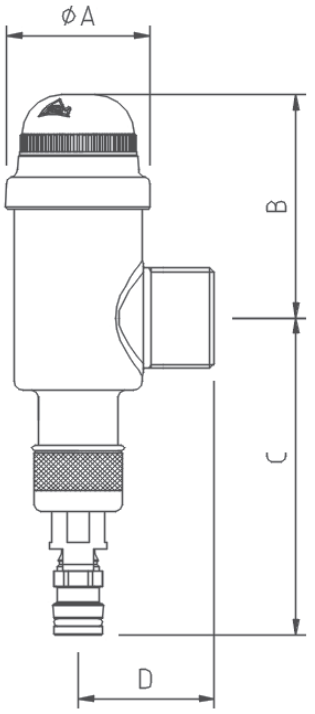

Code	Size	A mm	B mm	C mm	D mm
216.05.60	G 3/4"	47,8	74	104,8	43,5
216.06.60	G 1"	47,8	74	104,8	43,5
216.07.60	G 1"1/4	47,8	74	104,8	46

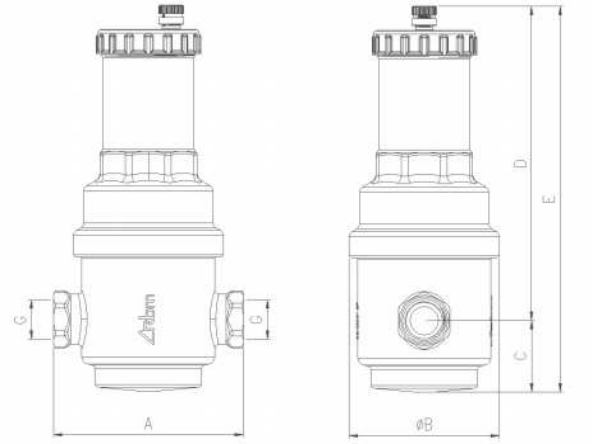

Code	Size	A mm	B mm	C mm	D mm	E mm
2830.04.00	G 1/2"	100	79	37,5	165,5	203
2830.05.00	G 3/4"	105	79	37,5	165,5	203
2830.06.00	G 1"	110	79	37,5	165,5	203
2830.07.00	G 1"1/4	115	79	37,5	165,5	203
2830.08.00	G 1"1/2	120	88	47	171,5	218,5
2830.09.00	G 2"	125	88	47	171,5	218,5
2830.09.72	DN 50	350	168	131	356	487
2830.10.72	DN 65	350	168	131	356	487
2830.11.72	DN 80	470	273	200	425	625
2830.13.72	DN 100	470	273	200	425	625
2830.14.72	DN 125	635	323,9	254	524	778
2830.15.72	DN 150	635	323,9	254	524	778

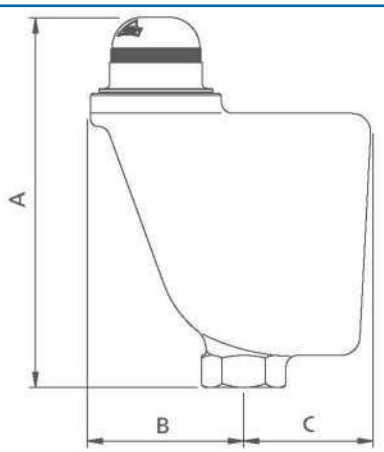

Code	Size	A mm	B mm	C mm
37.05.70	G 3/4"	156	64,5	53,5

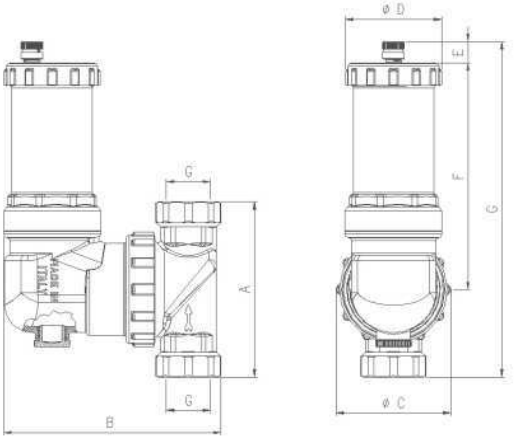

Code	Size	A mm	B mm	C mm	D mm	E mm	F mm	G mm
2649.05.00	G 3/4"	104	126,5	68,2	57,2	12,7	134,4	199÷200
2649.06.00	G 1"	104	126,5	68,2	57,2	12,7	134,4	199÷200

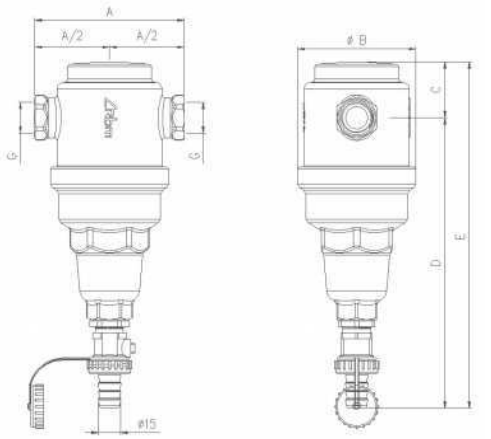

Code	Size	A mm	B mm	C mm	D mm	E mm
2829.04.00	G 1/2"	100	79	37,5	194	231,5
2829.05.00	G 3/4"	105	79	37,5	194	231,5
2829.06.00	G 1"	110	79	37,5	194	231,5
2829.07.00	G 1"1/4	115	79	37,5	194	231,5
2829.08.00	G 1"1/2	120	88	47	201	248
2829.09.00	G 2"	125	88	47	201	248
2829.09.72	DN 50	350	168	148	334	482
2829.10.72	DN 65	350	168	148	334	482
2829.11.72	DN 80	470	273	216	402,5	618,5
2829.13.72	DN 100	470	273	216	402,5	618,5
2829.14.72	DN 125	635	323,9	270	501,5	771,5
2829.15.72	DN 150	635	323,9	270	501,5	771,5
3173.04.00	G 1/2"	100	79	37,5	188	225,5
3173.05.00	G 3/4"	105	79	37,5	188	225,5
3173.06.00	G 1"	110	79	37,5	188	225,5
3173.07.00	G 1"1/4	115	79	37,5	188	225,5
3173.08.00	G 1"1/2	120	88	47	197	244
3173.09.00	G 2"	125	88	47	197	244

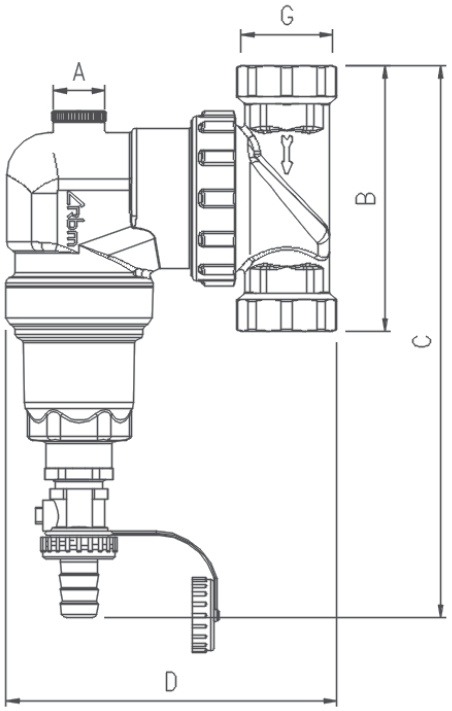

Code	Ø 1	Ø 2	B mm	C mm	D mm
3491.05.00	G 3/4"	G 3/8"	104	216	127
3491.06.00	G 1"	G 3/8"	104	216	127
3548.05.00	G 3/4"	G 3/8"	104	242	148
3548.06.00	G 1"	G 3/8"	104	242	148

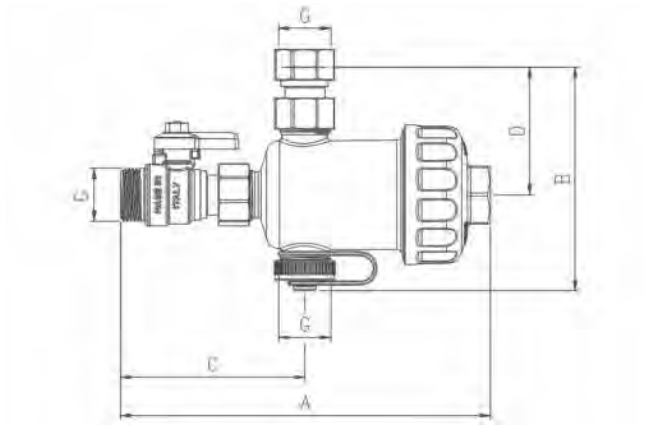

Code	Size	A mm	B mm	C mm	D mm
3070.05.X0	G 3/4"	185,4	112	92,4	64

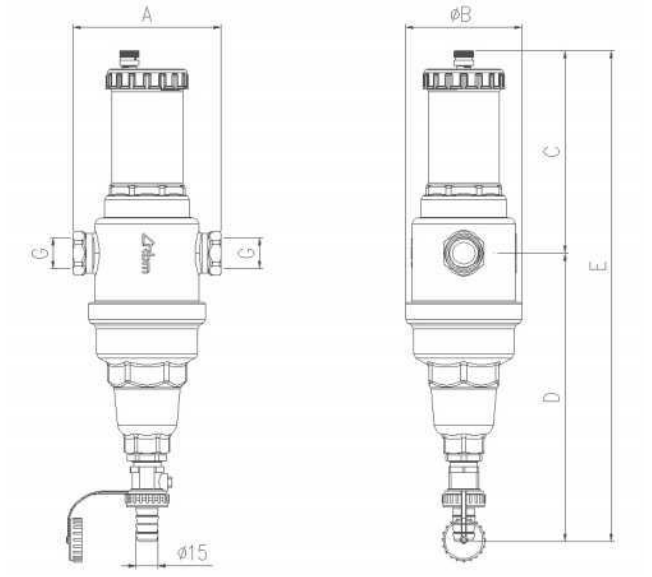

Code	Size	A mm	B mm	C mm	D mm	E mm
2831.04.00	G 1/2"	100	79	136,5	194	330,5
2831.05.00	G 3/4"	105	79	136,5	194	330,5
2831.06.00	G 1"	110	79	136,5	194	330,5
2831.07.00	G 1"1/4	115	79	136,5	194	330,5
2831.09.72	DN 50	350	168	346,6	324	670,6
2831.10.72	DN 65	350	168	346,6	324	670,6
2831.11.72	DN 80	470	273	475	452,5	927,5
2831.13.72	DN 100	470	273	475	452,5	927,5
2831.14.72	DN 125	635	323,9	559	536,5	1095,5
2831.15.72	DN 150	635	323,9	559	536,5	1095,5
2863.04.00	G 1/2"	100	79	136,5	188	324,5
2863.05.00	G 3/4"	105	79	136,5	188	324,5
2863.06.00	G 1"	110	79	136,5	188	324,5
2863.07.00	G 1"1/4	115	79	136,5	188	324,5

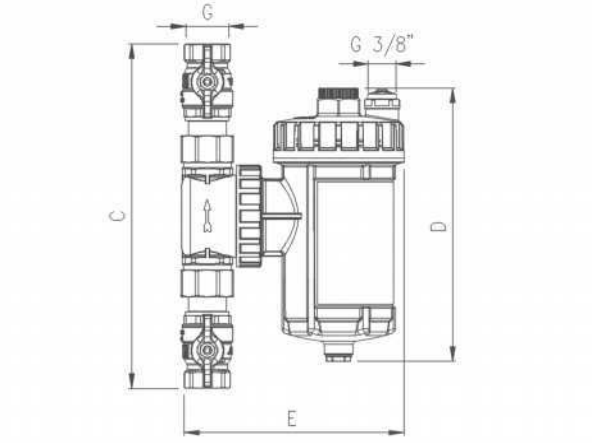

Code	Size	C mm	D mm	E mm
2319.05.50	G 3/4"	220	189	153
2319.06.50	G 1"	253	189	153
2319.07.50	G 1"1/4	256	189	153
2344.05.50	G 3/4"	220	189	153
2344.06.50	G 1"	253	189	153
2344.07.50	G 1"1/4	256	189	153
2405.05.00	G 3/4"	104	189	153
2405.06.00	G 1"	104	189	153

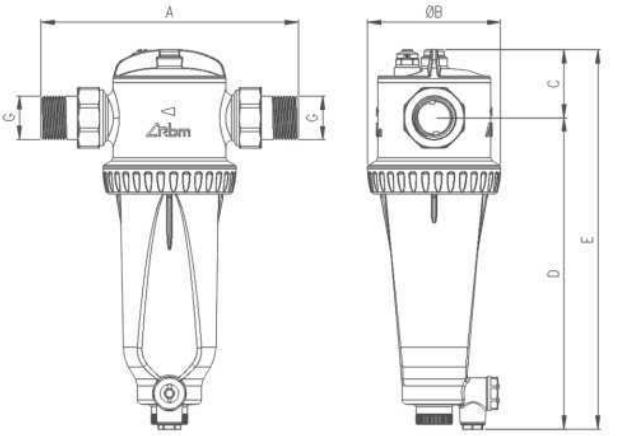

Code	Size	A mm	B mm	C mm	D mm	E mm
3699.06.00	G 1"	193,6	100	51	234	285

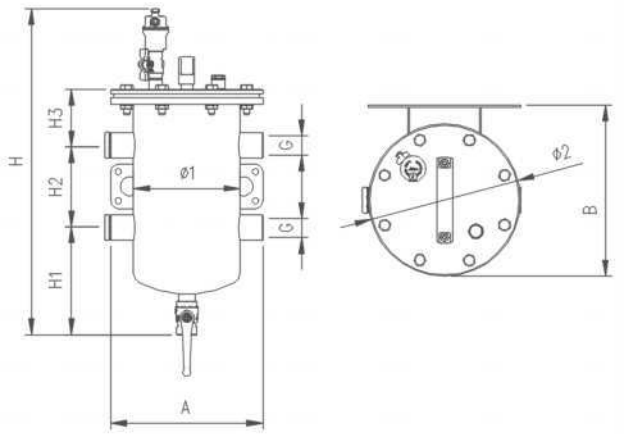

Code	Size	Ø1	Ø2	A mm	B mm	H mm	H1 mm	H2 mm	H3 mm
3602.04.00	G 1/2"	168	240	240	270	514	169	130	89
3602.05.00	G 3/4"	168	240	240	270	514	169	130	89
3602.06.00	G 1"	168	240	240	270	514	169	130	89
3602.07.00	G 1"1/4	168	240	240	270	514	169	130	89
3602.08.00	G 1"1/2	168	240	240	270	514	169	130	89
3602.09.00	G 2"	168	240	240	270	514	169	130	89

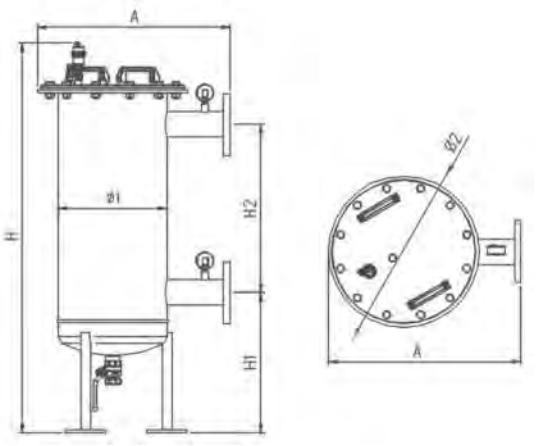

Code	Size	Ø1	Ø2	A mm	H mm	H1 mm	H2 mm
3541.09.10	DN 50	220	346	473	1060	385	450
3541.10.10	DN 65	324	450	575	1162	419	500
3541.11.10	DN 80	324	450	575	1162	419	500
3541.13.10	DN 100	324	450	575	1162	419	500
3541.14.10	DN 125	406	532	656	1241	435	550
3541.15.10	DN 150	406	532	656	1271	450	550

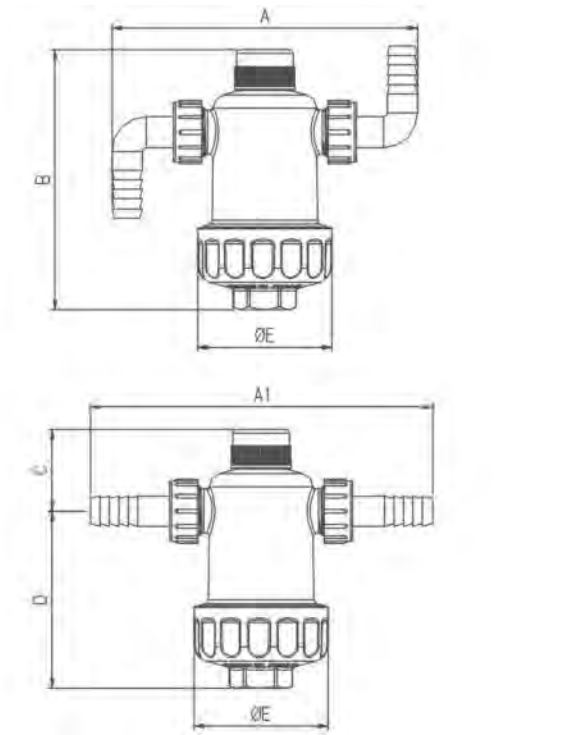

Code	Size	A mm	A1 mm	B mm	C mm	D mm	E mm
3286.05.00	G 3/4" x DN 20	160	179	136	43	93	70

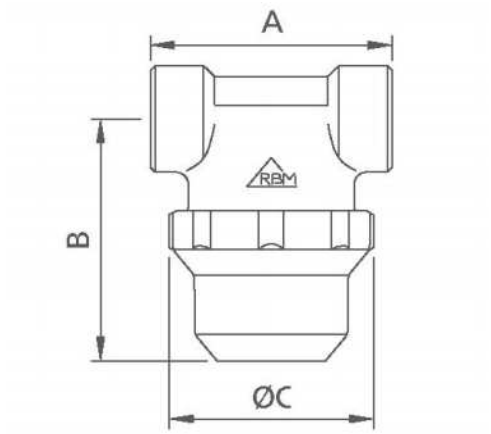

Code	Size	A mm	B mm	C mm
3.03.X0	G 3/8"	50	50	42,5
3.04.X0	G 1/2"	56	53	42,5
3.05.X0	G 3/4"	67	51,5	48
3.06.X0	G 1"	80	55,5	58,5
3.07.X0	G 1"1/4	92	68,5	78,5
3.08.X0	G 1"1/2	109	94	80,5
3.09.X0	G 2"	109	94	80,5
3.10.X0	G 2"1/2	180	192,5	186
3.11.X0	G 3"	188	192,5	186
3.13.X0	G 4"	202	192,5	186

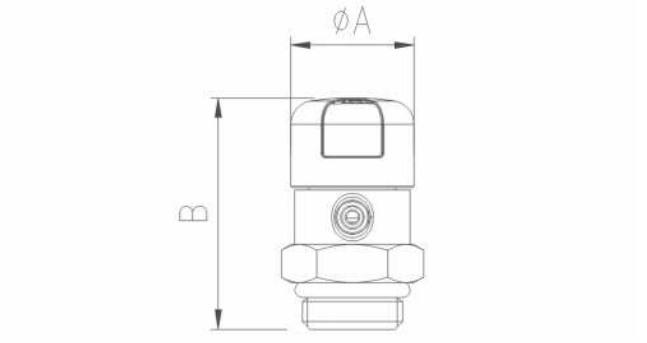

Code	Size	A mm	B mm
18.01.00	1/8"	16	30
18.02.00	1/4"	16	30
18.03.00	3/8"	16	31
18.04.00	1/2"	16	31

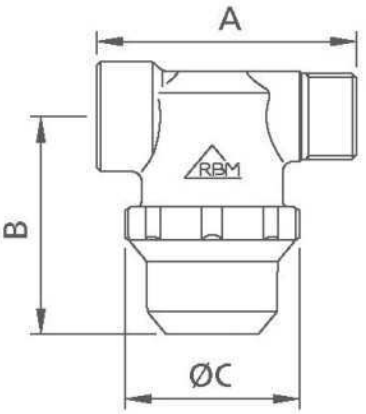

Code	Size	A mm	B mm	C mm
4.04.X0	G 1/2"	63	53	42,5
4.05.X0	G 3/4"	72	51,5	48
4.06.X0	G 1"	87	55,5	58,5
4.07.X0	G 1"1/4	97	68,5	78,5
4.08.X0	G 1"1/2	114,5	94	80,5
4.09.X0	G 2"	114,5	94	80,5

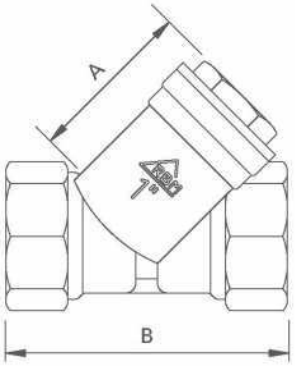

Code	Size	A mm	B mm
858.04.X2	G 1/2"	44	57
858.05.X2	G 3/4"	53	70
858.06.X2	G 1"	56	78
858.07.X2	G 1"1/4	70	97
858.08.X2	G 1"1/2	80	106
858.09.X2	G 2"	95	126

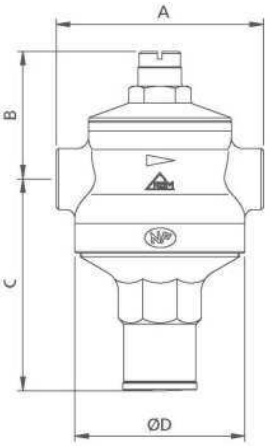

Code	Size	A mm	B mm	C mm	D mm
51.04.70	G 1/2"	95	58,5	97	78
51.05.70	G 3/4"	95	58,5	97	78
51.06.70	G 1"	95	64,5	101,5	78
51.07.70	G 1"1/4	116	68,5	132,6	92,5
51.08.70	G 1"1/2	122	73	142,1	92,5
51.09.70	G 2"	126	73	142,6	92,5
51.10.70	G 2"1/2	180	103	281	186
51.11.70	G 3"	188	103	281	186
51.13.70	G 4"	202	103	281	186
51.04.95	G 1/2"	95	56,5	117,7	78
51.05.95	G 3/4"	95	56,5	117,7	78
51.06.95	G 1"	95	62,5	122,2	78
51.07.95	G 1"1/4	116	66,5	142	92,5
51.08.95	G 1"1/2	122	70,5	152	92,5
51.09.95	G 2"	126	70,5	152	92,5
51.10.10	DN 65	279	103	281	186
51.11.10	DN 80	297	103	281	186
51.13.10	DN 100	317,5	103	281	186

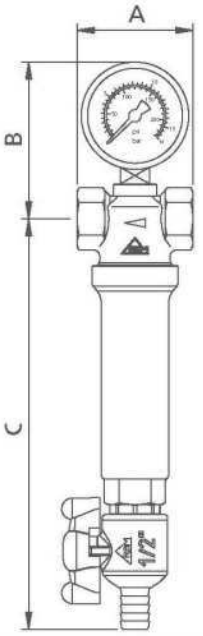

Code	Size	A mm	B mm	C mm
126.03.10	G 3/8"	50	74	195,5
126.04.10	G 1/2"	56	76	199
126.05.10	G 3/4"	67	78	192
126.06.10	G 1"	80	82	198
126.07.10	G 1"1/4	92	86,5	229
126.08.10	G 1"1/2	109	89,5	239
126.09.10	G 2"	109	96	239
126.10.10	G 2"1/2	180	124	466
126.11.10	G 3"	188	124	466
126.13.10	G 4"	202	124	466

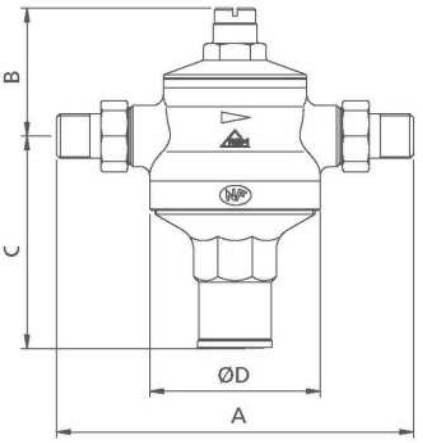

Code	Size	A mm	B mm	C mm	D mm
51.04.10	G 1/2"	163	56,5	97	78
51.05.10	G 3/4"	175	56,5	97	78
51.06.10	G 1"	185,5	62,5	101,5	78
51.07.10	G 1"1/4	216,5	62,5	132,6	92,5
51.08.10	G 1"1/2	238,5	70,5	142,1	92,5
51.09.10	G 2"	266	70,5	142,6	92,5

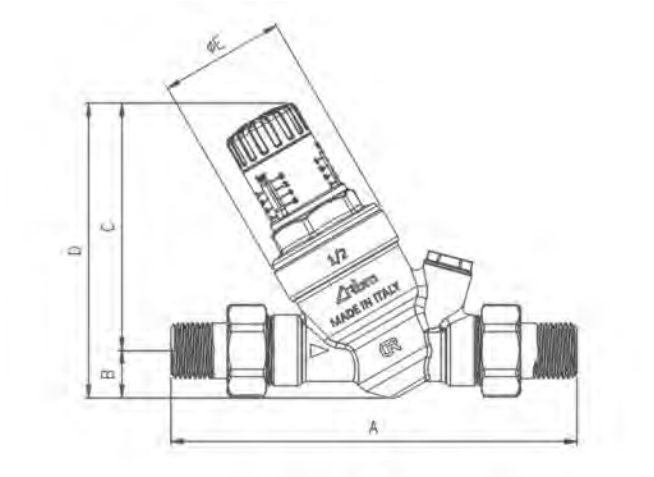

Code	Size	A mm	B mm	C mm	D mm	E mm
2909.04.00	G 1/2"	139	17,1	90,9	108	46
2909.05.00	G 3/4"	151	19,1	91,9	111	46
2909.06.00	G 1"	182	23,8	134,2	158	61
2909.07.00	G 1"1/4	197	29,8	138,2	168	61
2909.08.00	G 1"1/2	215	37	144	181	61
2909.09.00	G 2"	241	47	146	193	61

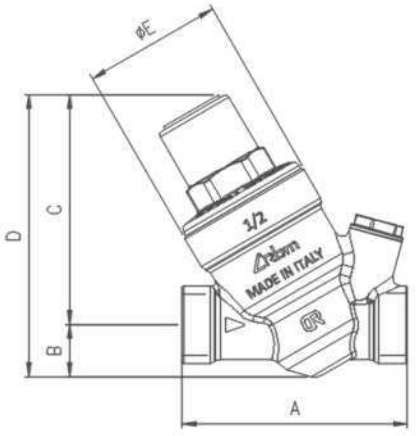

Code	Size	A mm	B mm	C mm	D mm	E mm
2848.04.00	G 1/2"	75	18	76	94	46
2848.05.00	G 3/4"	78	16	77	93	46
2848.06.00	G 1"	103	25	115	140	61
2848.07.00	G 1"1/4	115	27	119	146	61
2848.08.00	G 1"1/2	119	28	125	153	61
2848.09.00	G 2"	131	34	127	161	61

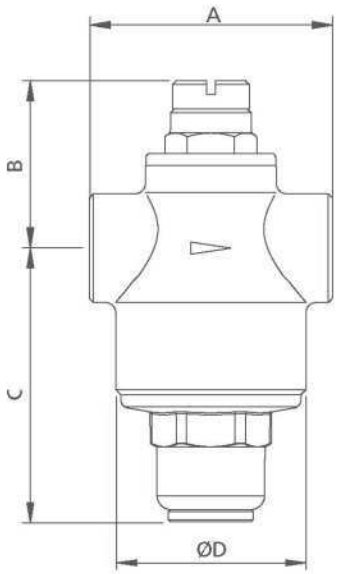

Code	Size	A mm	B mm	C mm	D mm
87.03.80	G 3/8"	60	41,5	67,5	47
87.04.80	G 1/2"	60	41,5	67,5	47
87.05.80	G 3/4"	60	41,5	67,5	47
87.03.10	G 3/8"	60	41,5	67,5	47
87.04.10	G 1/2"	60	41,5	67,5	47
87.05.10	G 3/4"	60	41,5	67,5	47

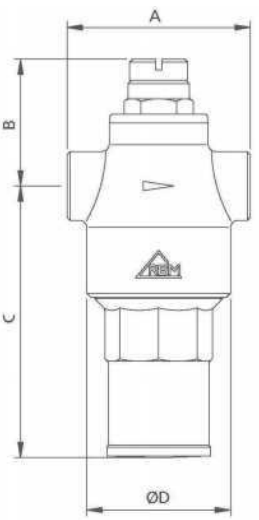

Code	Size	A mm	B mm	C mm	D mm
87.03.70	G 3/8"	60	41,5	89	47
87.04.70	G 1/2"	60	41,5	89	47
87.05.70	G 3/4"	60	41,5	89	47
87.06.70	G 1"	86	60,5	91,5	61
87.07.70	G 1"1/4	91	64,5	93	61
87.08.70	G 1"1/2	91	64,5	98	61
87.09.70	G 2"	91	69,5	101	61
87.04.60	G 1/2"	60	41,5	89	47
87.05.60	G 3/4"	60	41,5	89	47
87.06.60	G 1"	86	60,5	91,5	61
87.07.60	G 1"1/4	91	64,5	93	61
87.08.60	G 1"1/2	91	64,5	98	61
87.09.60	G 2"	91	69,5	101	61

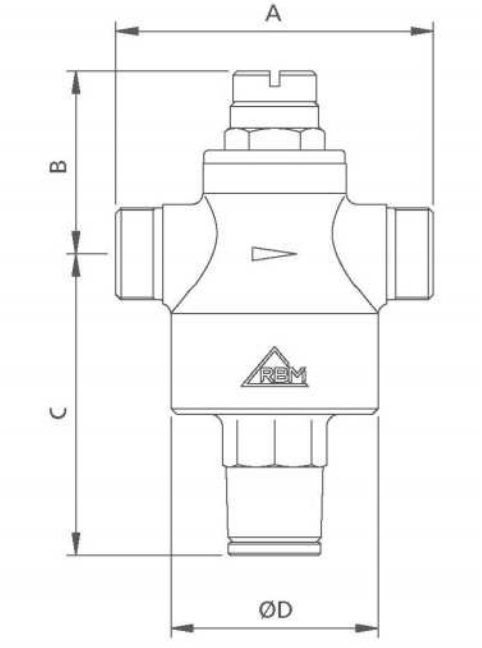

Code	Size	A mm	B mm	C mm	D mm
288.04.80	G 1/2"	72	41,5	68,5	47
288.05.80	G 3/4"	76	41,5	68,5	47

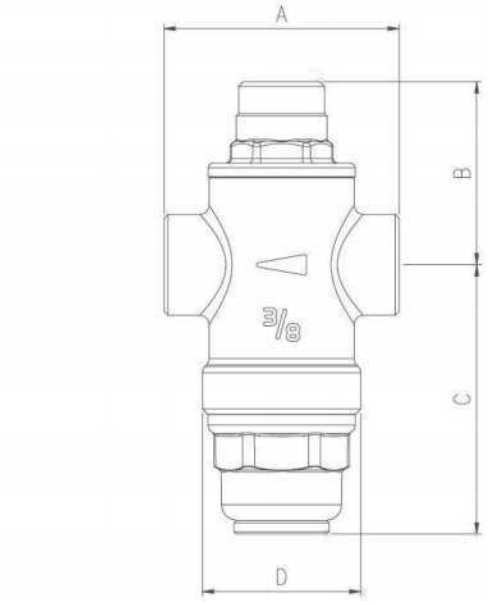

Code	Size	A mm	B mm	C mm	D mm
1139.03.00	G 3/8"	52	40,5	59	32
1139.04.00	G 1/2"	52	40,5	59	32
1139.05.00	G 3/4"	52	40,5	59	32

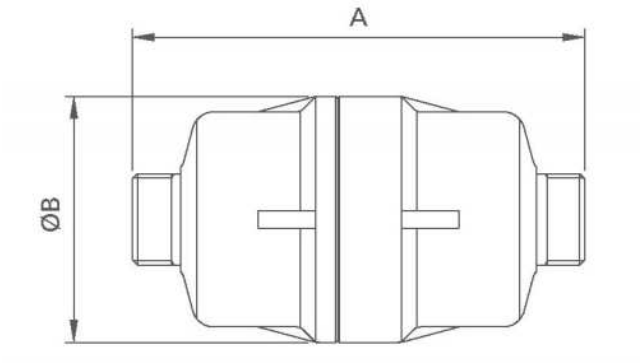

Code	Size	A mm	B mm
304.04.00	G 1/2"	103	56
304.05.00	G 3/4"	105	56
304.06.00	G 1"	128	65
304.07.00	G 1"1/4	141	79
304.08.00	G 1"1/2	202	107
304.09.00	G 2"	203	107
304.10.00	G 2"1/2	225	235
304.11.00	G 3"	239	235
304.13.00	G 4"	251	235

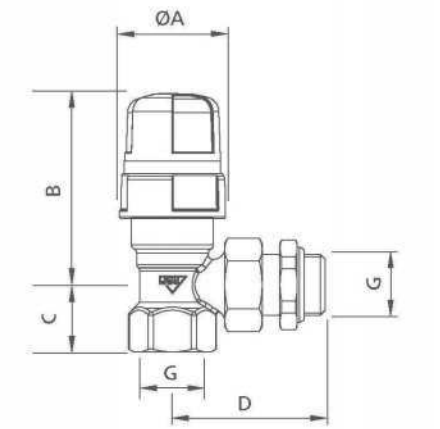

Code	Size	A mm	B mm	C mm	D mm
2640.03.90	G 3/8"	35,5	66	19,5	50
2640.04.90	G 1/2"	35,5	66	22,5	51,5
2640.05.90	G 3/4"	35,5	66	28	62,5
2640.06.90	G 1"	35,5	58	34,5	52
31.03.00	G 3/8"	35,5	66	19,5	50
31.04.00	G 1/2"	35,5	66	22,5	51,5
31.05.00	G 3/4"	35,5	66	28	62,5

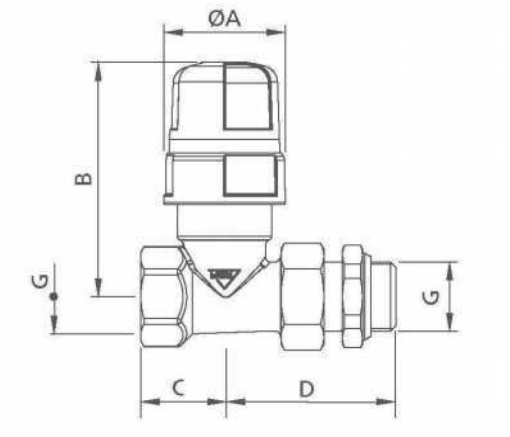

Code	Size	A mm	B mm	C mm	D mm
2641.03.90	G 3/8″	35,5	70	22,5	48,5
2641.04.90	G 1/2″	35,5	70	24,5	50
2641.05.90	G 3/4″	35,5	70	31,5	58,5
2641.06.90	G 1″	35,5	59	34	50
32.03.00	G 3/8″	35,5	70	22,5	48,5
32.04.00	G 1/2″	35,5	70	24,5	50
32.05.00	G 3/4″	35,5	70	31,5	58,5

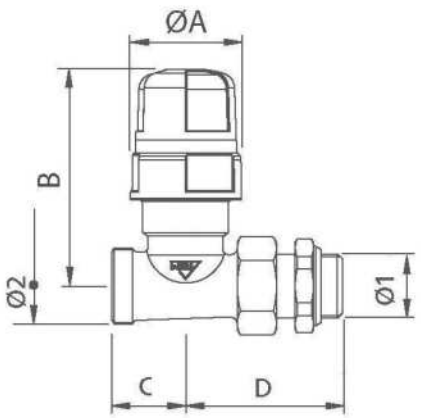

Code	Ø 1	Ø 2	A mm	B mm	C mm	D mm
2643.03.90	G 3/8″	RBM	35,5	70	23,5	48,5
2643.04.90	G 1/2″	RBM	35,5	70	23,5	50
49.03.00	G 3/8″	RBM	35,5	70	23,5	48,5
49.04.00	G 1/2″	RBM	35,5	70	23,5	50

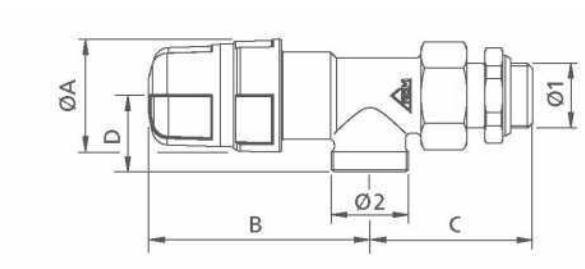

Code	Ø 1	Ø 2	A mm	B mm	C mm	D mm
180.03.00	G 3/8″	RBM	35,5	69,5	49	24
180.04.00	G 1/2″	RBM	35,5	69,5	52,5	24

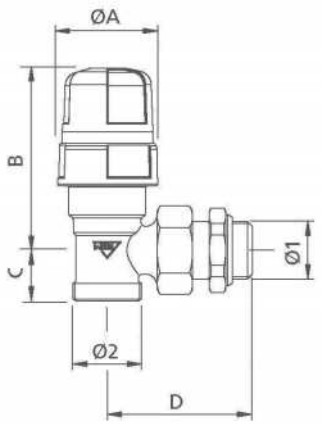

Code	Ø 1	Ø 2	A mm	B mm	C mm	D mm
2642.03.90	G 3/8″	RBM	35,5	66	18	50
2642.04.90	G 1/2″	RBM	35,5	66	18	51,5
48.03.00	G 3/8″	RBM	35,5	66	18	50
48.04.00	G 1/2″	RBM	35,5	66	18	51,5

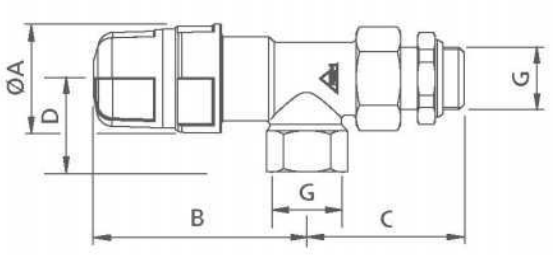

Code	Size	A mm	B mm	C mm	D mm
179.03.00	G 3/8″	35,5	70,5	47,5	29
179.04.00	G 1/2″	35,5	70,5	51,5	30,5

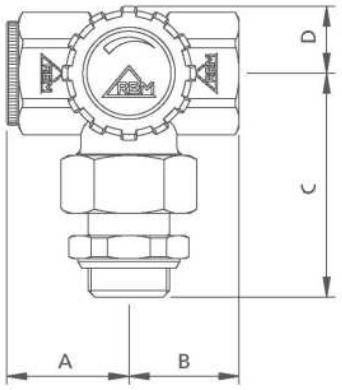

Code	Size	A mm	B mm	C mm	D mm
2720.03.90	G 3/8"	28,5	24,5	49,5	14
2720.04.90	G 1/2"	30,5	27,5	54,5	15
395.03.00	G 3/8"	28,5	24,5	49,5	14
395.04.00	G 1/2"	30,5	27,5	54,5	15

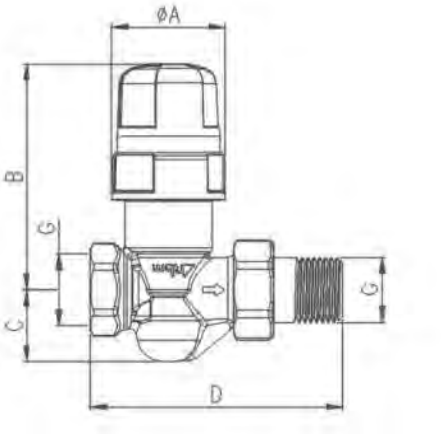

Code	Size	A mm	B mm	C mm	D mm
3564.03.90	G 3/8"	35,5	70,7	22,5	77,6
3564.04.90	G 1/2"	35,5	70,7	22,5	79,2

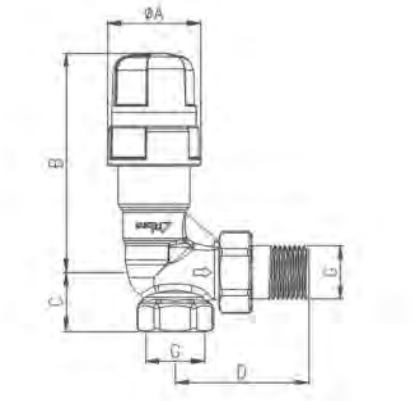

Code	Size	A mm	B mm	C mm	D mm
3563.03.90	G 3/8"	35,5	-	-	50
3563.04.90	G 1/2"	35,5	83,5	22,5	51,5

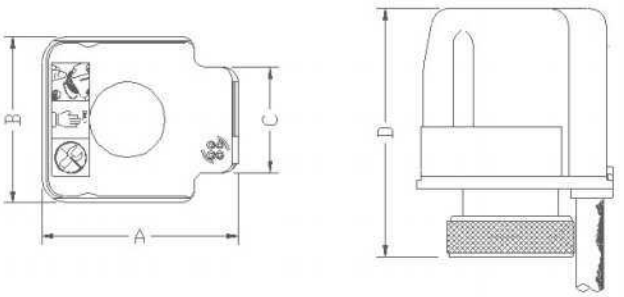

Code	A mm	B mm	C mm	D mm
2944.00.X2	52	44	28	60
306.00.X2	52	44	28	60

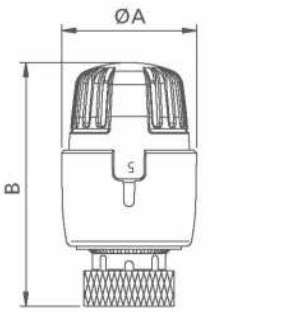

Code	A mm	B mm
590.00.00	47	81÷86
720.00.30	47	82,5÷87,5
2633.00.00	47	81÷86
3087.00.00	47	93÷98
590.00.10	47	81÷86

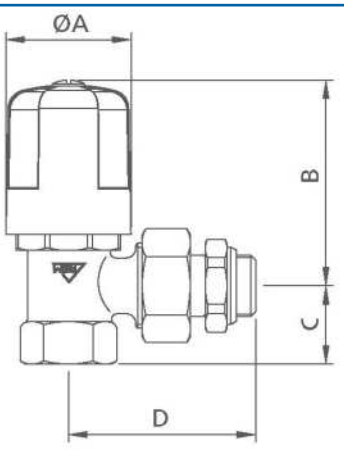

Code	Size	A mm	B mm	C mm	D mm
7.03.00	G 3/8"	33,5	55	19,5	50
7.04.00	G 1/2"	33,5	56	22,5	51,5
7.05.00	G 3/4"	53	64,5	28	62,5
7.06.00	G 1"	56	75	33,5	67,5
7.07.00	G 1"1/4	65	82	37,5	81

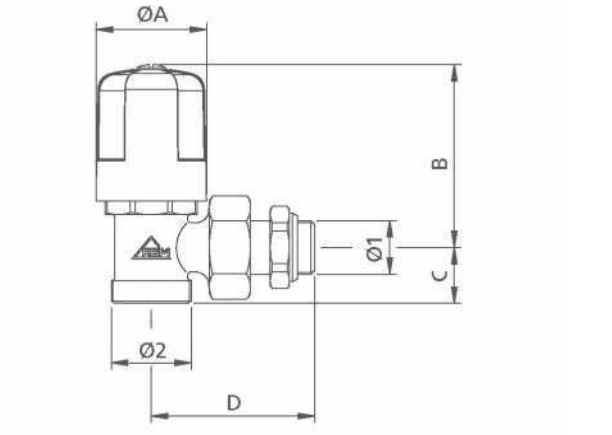

Code	Ø 1	Ø 2	A mm	B mm	C mm	D mm
27.03.X0	G 3/8″	RBM	33,5	55,5	17	50
27.04.X0	G 1/2″	RBM	33,5	55,5	17	51,5

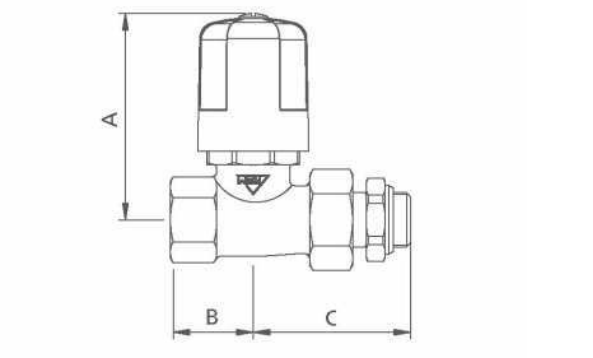

Code	Size	A mm	B mm	C mm
8.03.00	G 3/8″	62	22,5	48,5
8.04.00	G 1/2″	62	24,5	50
8.05.00	G 3/4″	72	33	59,5
8.06.00	G 1″	85	38	62
8.07.00	G 1″1/4	97	41,5	75

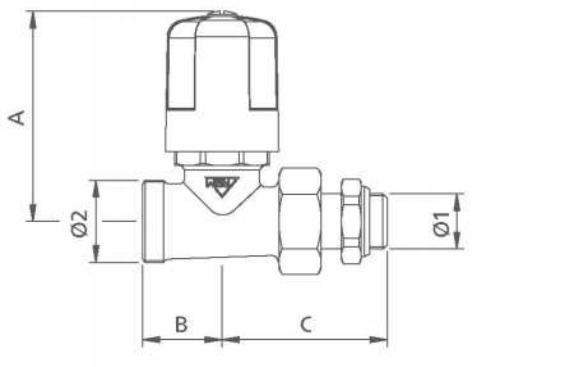

Code	Ø 1	Ø 2	A mm	B mm	C mm
28.03.X0	G 3/8″	RBM	62	23,5	49
28.04.X0	G 1/2″	RBM	62	23,5	50,5

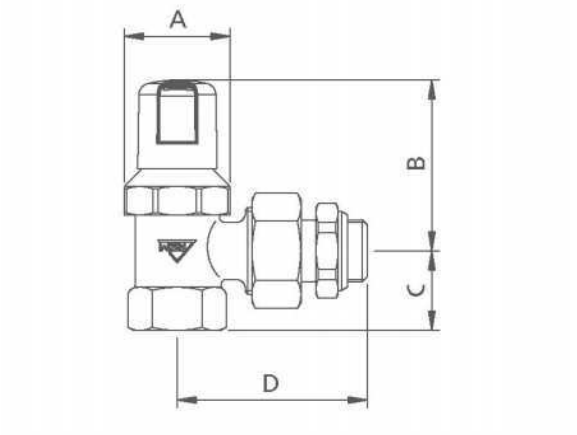

Code	Size	A mm	B mm	C mm	D mm
9.03.00	G 3/8″	28	45	19,5	50
9.04.00	G 1/2″	28	46	22,5	51,5
9.05.00	G 3/4″	37	48,5	28	62,5
9.06.00	G 1″	41	57,5	33,5	67,5
9.07.00	G 1″1/4	48,5	68,5	37,5	81

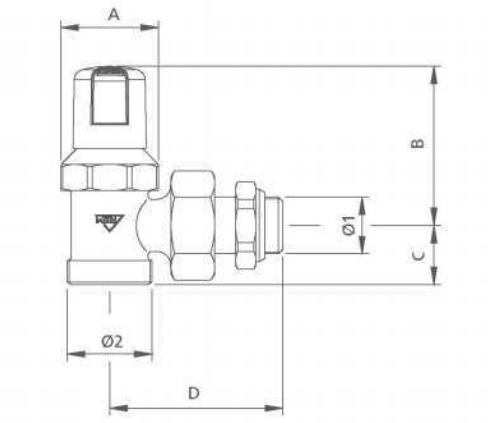

Code	Ø 1	Ø 2	A mm	B mm	C mm	D mm
29.03.X0	G 3/8″	RBM	28	45,5	17	50
29.04.X0	G 1/2″	RBM	28	45,5	17	51,5

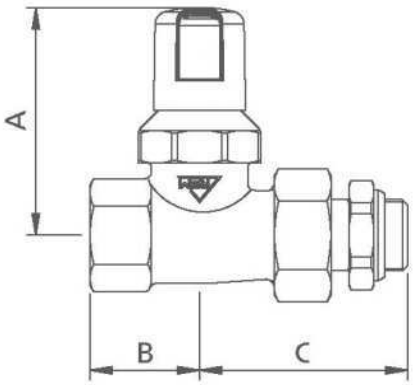

Code	Size	A mm	B mm	C mm
10.03.00	G 3/8"	52	22,5	48,5
10.04.00	G 1/2"	52	24,5	50
10.05.00	G 3/4"	56	33	59,5
10.06.00	G 1"	68	38	62
10.07.00	G 1"1/4	83,5	41,5	75

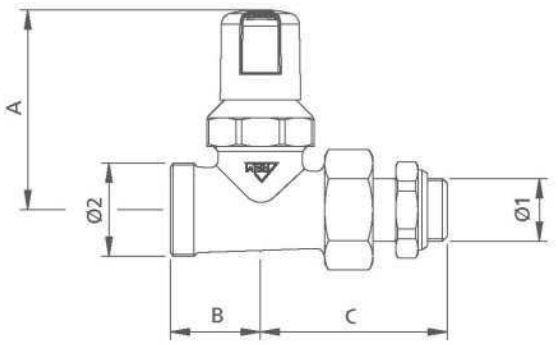

Code	Ø 1	Ø 2	A mm	B mm	C mm
30.03.00	G 3/8"	RBM	52	23,5	49
30.03.10	G 3/8"	RBM	52	23,5	49
30.04.00	G 1/2"	RBM	52	23,5	50,5
30.04.10	G 1/2"	RBM	52	23,5	50,5

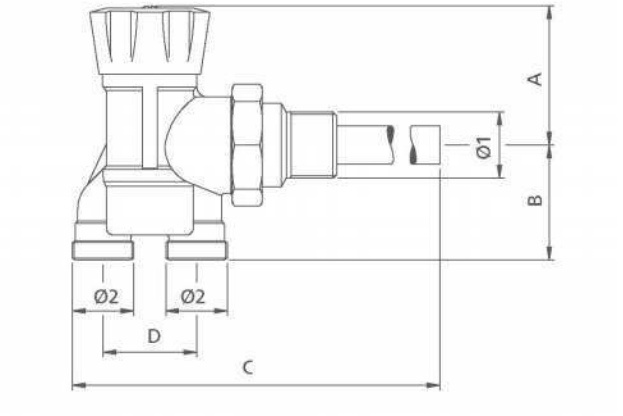

Code	Ø 1	Ø 2	A mm	B mm	C mm	D mm
25.05.X0	G 3/4"	RBM	55	45,5	362	37
25.06.X0	G 1"	RBM	55	45,5	362	37

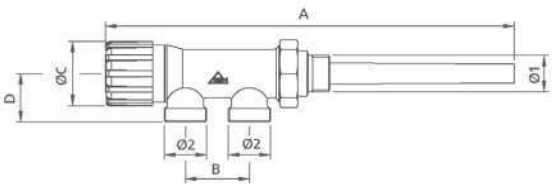

Code	Ø 1	Ø 2	A mm	B mm	C mm	D mm
585.04.X0	G 1/2"	RBM	236,5	37	37	28
585.05.X0	G 3/4"	RBM	236,5	37	37	28

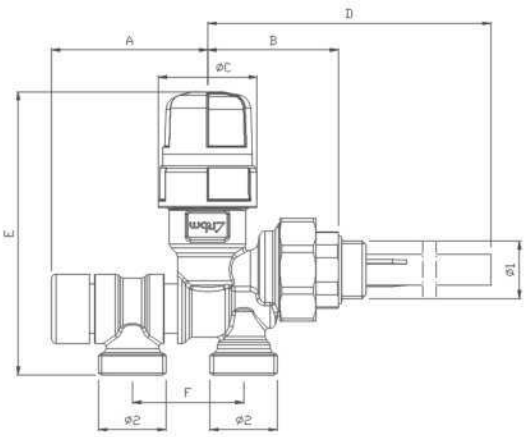

Code	Ø 1	Ø 2	A mm	B mm	C mm	D mm	E mm	F mm
3101.04.00	G 1/2"	RBM	50	50	35,5	160	102	35-40
3101.05.00	G 3/4"	RBM	50	50	35,5	160	102	35-40
3101.06.00	G 1"	RBM	50	50	35,5	160	102	35-40

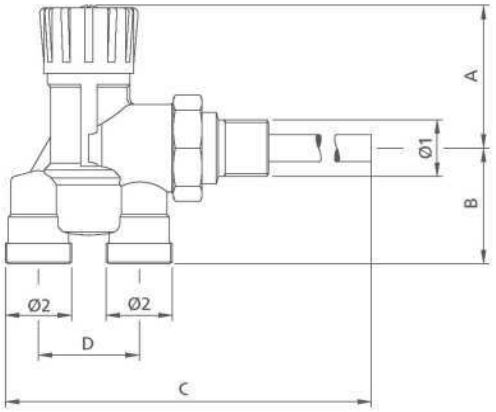

Code	Ø1	Ø2	A mm	B mm	C mm	D mm
22.04.00	G 1/2"	RBM	52,5	42,5	363	37
22.04.20	G 1/2"	RBM	52,5	42,5	114	37
22.05.00	G 3/4"	RBM	52,5	42,5	363	37
22.05.30	G 3/4"	RBM	52,5	42,5	363	37

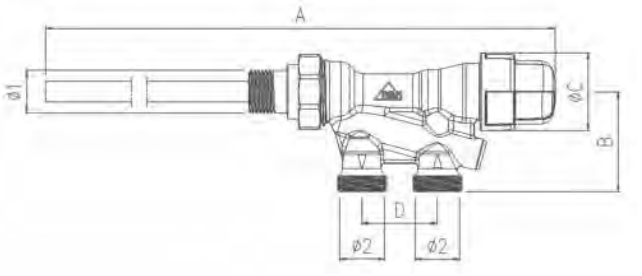

Code	Ø1	Ø2	A mm	B mm	C mm	D mm
1028.04.00	G 1/2"	RBM	410	49	35,5	37
1028.05.00	G 3/4"	RBM	410	49	35,5	37

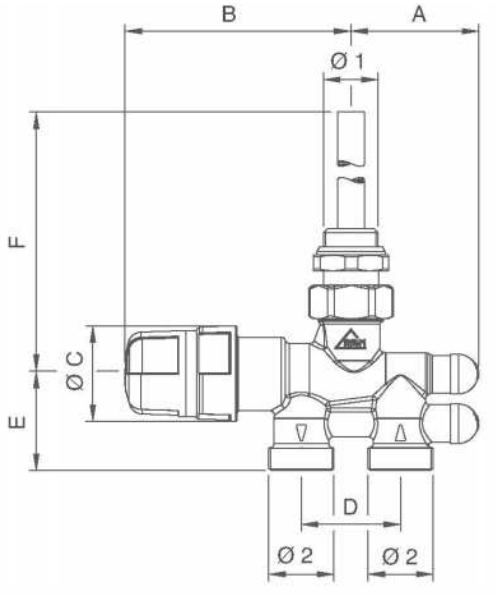

Code	Ø1	Ø2	A mm	B mm	C mm	D mm	E mm	F mm
754.04.00	G 1/2"	RBM	47,5	85	35,5	37	36	353

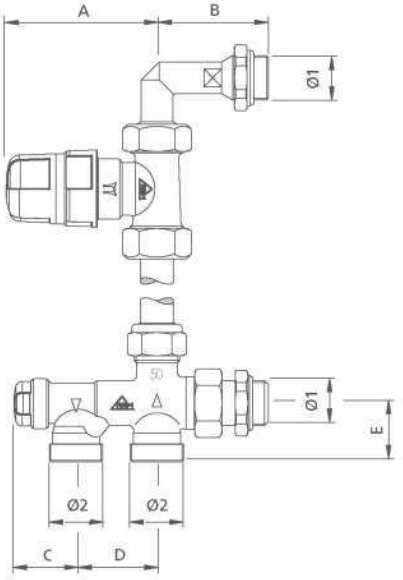

Code	Ø1	Ø2	A mm	B mm	C mm	D mm	E mm
223.04.50	G 1/2"	RBM	70	51	28,5	37	37
223.04.00	G 1/2"	RBM	70	51	28,5	37	37

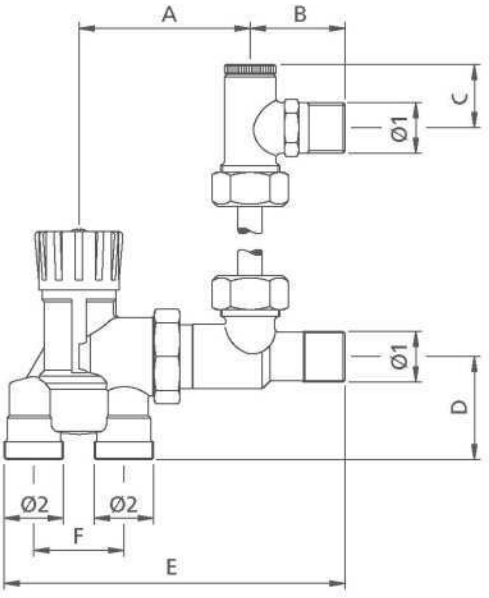

Code	Ø1	Ø2	A mm	B mm	C mm	D mm	E mm	F mm
424.04.70	G 1/2"	RBM	70,5	39	26	42,5	140	37
424.04.90	G 1/2"	RBM	70,5	39	26	42,5	140	37

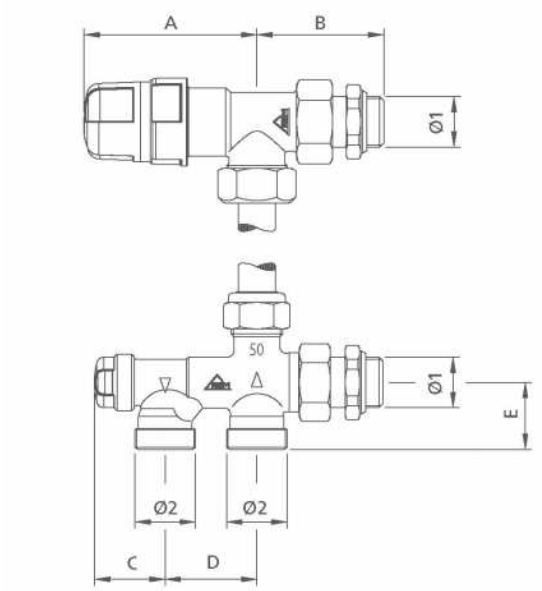

Code	Ø 1	Ø 2	A mm	B mm	C mm	D mm	E mm
225.04.50	G 1/2"	RBM	70,5	51,5	28,5	37	37
225.04.00	G 1/2"	RBM	70,5	51,5	28,5	37	37

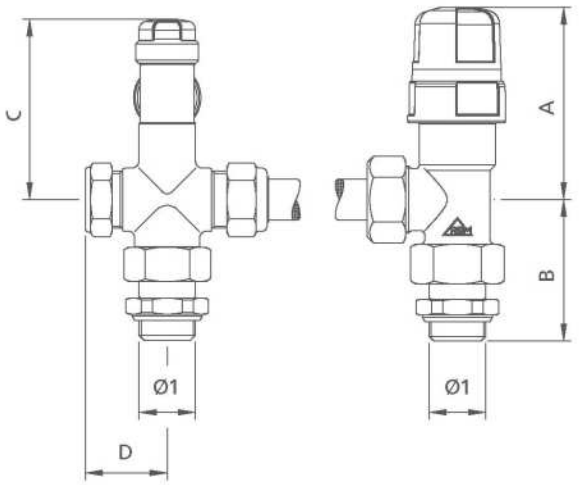

Code	Ø 1	Diverter valve connections	A mm	B mm	C mm	D mm
213.04.50	G 1/2"	RBM	70,5	51,5	65,5	29,5
213.04.00	G 1/2"	RBM	70,5	51,5	65,5	29,5

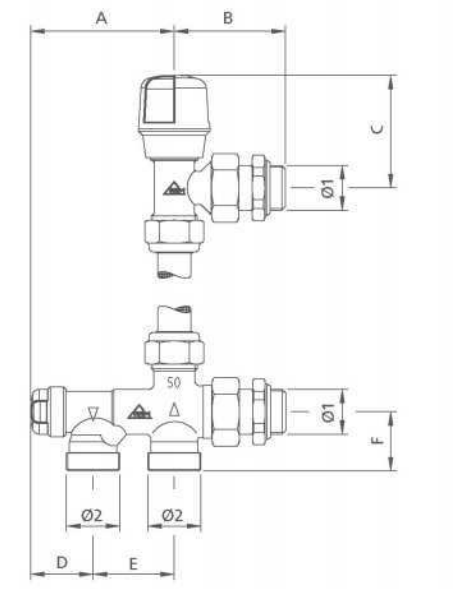

Code	Ø 1	Ø 2	A mm	B mm	C mm	D mm	E mm	F mm
249.04.50	G 1/2"	RBM	65,5	51	51,5	28,5	37	37
249.04.00	G 1/2"	RBM	65,5	51	51,5	28,5	37	37

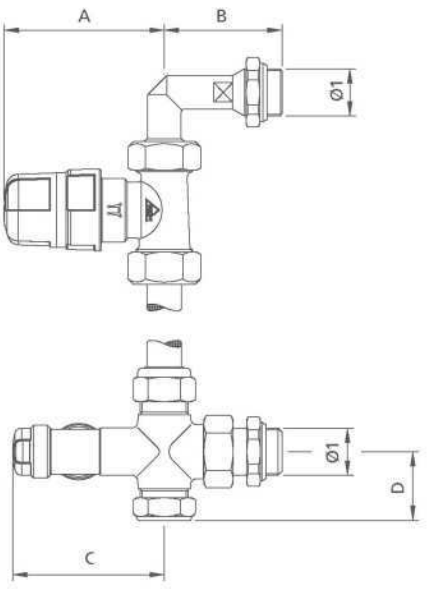

Code	Ø 1	Diverter valve connections	A mm	B mm	C mm	D mm
211.04.50	G 1/2"	RBM	70,5	51	65,5	29,5
211.04.00	G 1/2"	RBM	70,5	51	65,5	29,5

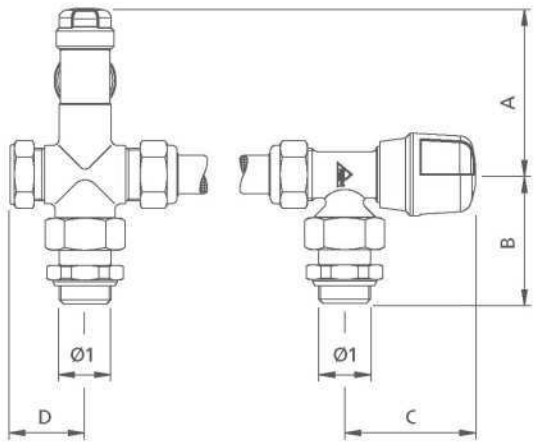

Code	Ø 1	Diverter valve connections	A mm	B mm	C mm	D mm
212.04.50	G 1/2"	RBM	65,5	51	51,5	29,5
212.04.00	G 1/2"	RBM	65,5	51	51,5	29,5

Fig. 1

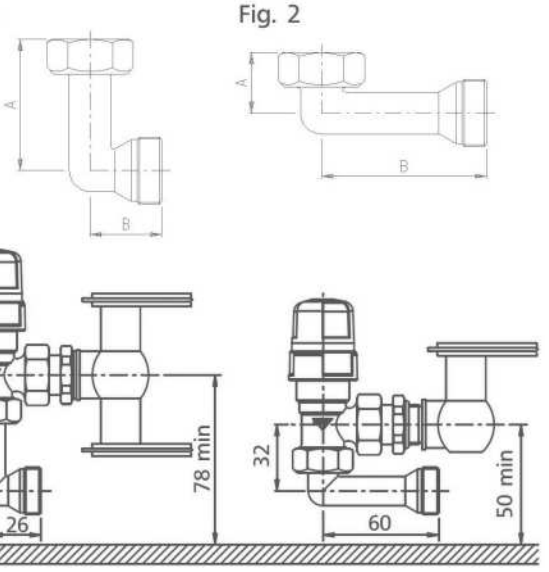

Fig. 2

Code	Connections	A mm	B mm
177.00.00	RBM	21,5	60
177.00.10	RBM	47,5	26

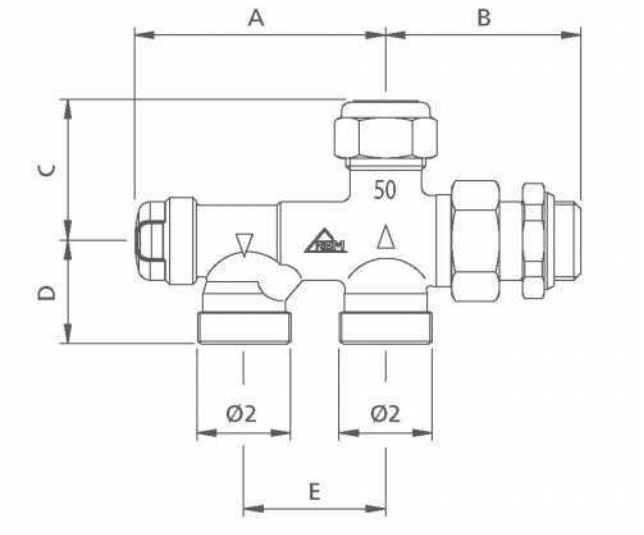

Code	Ø 1	Ø 2	A mm	B mm	C mm	D mm	E mm
165.04.50	G 1/2"	RBM	65,5	51	37	27	37
160.04.00	G 1/2"	RBM	65,5	51	37	27	37

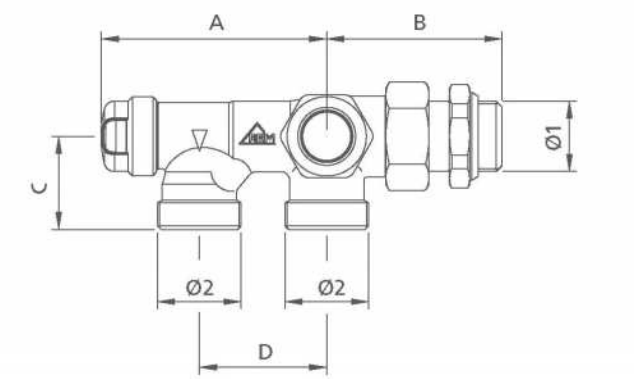

Code	Ø 1	Ø 2	A mm	B mm	C mm	D mm
214.04.50	G 1/2"	RBM	65,5	51	27	37
214.04.00	G 1/2"	RBM	65,5	51	27	37

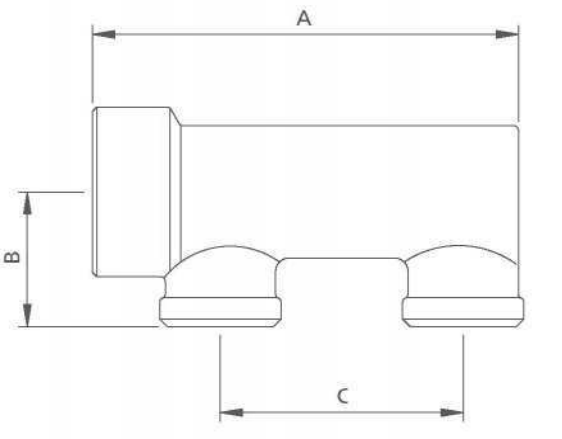

Code	N. ways	Body connections	Side connections	A mm	B mm	C mm
100.06.50	2	G 1"	G 3/4" EK	119	30	50
101.06.50	3	G 1"	G 3/4" EK	169	30	50
102.06.50	4	G 1"	G 3/4" EK	219	30	50
293.05.00	3	G 3/4"	G 1/2"	105	26	50
294.05.00	4	G 3/4"	G 1/2"	155	26	50
295.05.00	5	G 3/4"	G 1/2"	205	26	50
296.05.00	6	G 3/4"	G 1/2"	255	26	50
297.05.00	7	G 3/4"	G 1/2"	305	26	50
298.05.00	8	G 3/4"	G 1/2"	355	26	50
3147.05.50	2	G 3/4"	G 1/2"	84	26	37
3148.05.50	3	G 3/4"	G 1/2"	121	26	37
3149.05.50	4	G 3/4"	G 1/2"	157	26	37
3150.06.50	5	G 1"	G 1/2"	106	30,5	50
3151.06.50	6	G 1"	G 1/2"	156	30,5	50
3152.06.50	7	G 1"	G 1/2"	206	30,5	50
34.05.00	1	G 3/4"	RBM	47,5	26,5	37
35.05.00	2	G 3/4"	RBM	84,5	26,5	37
36.05.00	3	G 3/4"	RBM	121,5	26,5	37
34.06.00	1	G 1"	RBM	47,5	30,5	37
35.06.00	2	G 1"	RBM	84,5	30,5	37
36.06.00	3	G 1"	RBM	121,5	30,5	37
35.07.00	2	G 1"1/4	RBM	84,5	35	37
36.07.00	3	G 1"1/4	RBM	121,5	35	37
35.05.40	2	G 3/4"	G 1/2" F	84,5	26,5	37
36.05.40	3	G 3/4"	G 1/2" F	121,5	26,5	37
35.06.40	2	G 1"	G 1/2" F	84,5	30	37
36.06.40	3	G 1"	G 1/2" F	121,5	30	37
35.05.50	2	G 3/4"	G 1/2" M	84,5	26,5	37
36.05.50	3	G 3/4"	G 1/2" M	121,5	26,5	37
35.06.50	2	G 1"	G 1/2" M	84,5	30	37
36.06.50	3	G 1"	G 1/2" M	121,5	30	37

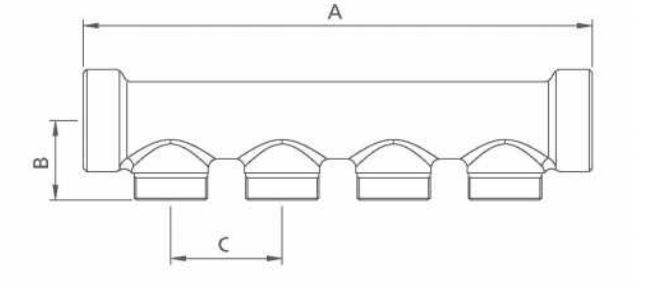

Code	N. ways	Body connections	Side connections	A mm	B mm	C mm
63.05.00	4	G 3/4"	RBM	169	26,5	37
63.05.20	5	G 3/4"	RBM	206	26,5	37
64.05.00	6	G 3/4"	RBM	243	26,5	37
64.05.20	7	G 3/4"	RBM	280	26,5	37
65.05.00	8	G 3/4"	RBM	317	26,5	37
63.06.00	4	G 1"	RBM	169	30,5	37
63.06.20	5	G 1"	RBM	206	30,5	37
64.06.00	6	G 1"	RBM	243	30,5	37
64.06.20	7	G 1"	RBM	280	30,5	37
65.06.00	8	G 1"	RBM	317	30,5	37
66.06.00	10	G 1"	RBM	391	30,5	37

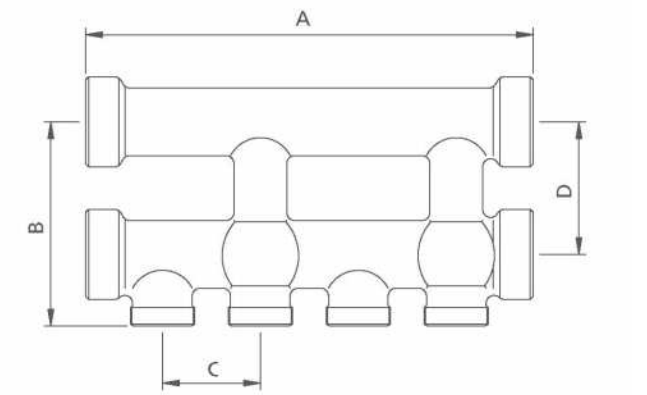

Code	N. ways	Body	Side	A mm	B mm	C mm	D mm
59.05.00	4	G 3/4"	RBM	169	77	37	50
60.05.00	6	G 3/4"	RBM	243	77	37	50
61.05.00	8	G 3/4"	RBM	317	77	37	50
62.05.00	10	G 3/4"	RBM	391	77	37	50
59.06.00	4	G 1"	RBM	169	80	37	50
60.06.00	6	G 1"	RBM	243	80	37	50
61.06.00	8	G 1"	RBM	317	80	37	50
62.06.00	10	G 1"	RBM	391	80	37	50

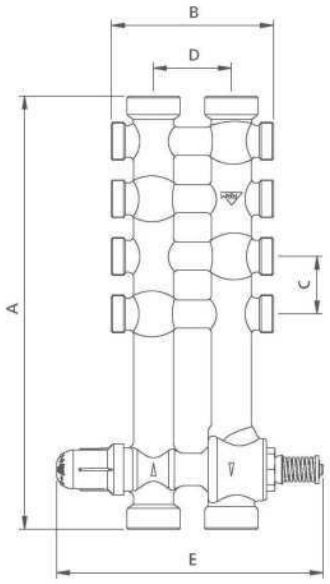

Code	N.ways	Body	Side	A mm	B mm	C mm	D mm	E mm
433.05.00	4+4	G 3/4″	RBM	278,5	104	37	50	171
434.05.00	6+6	G 3/4″	RBM	352,5	104	37	50	171
435.05.00	8+8	G 3/4″	RBM	426,5	104	37	50	171
433.06.00	4+4	G 1″	RBM	280,5	115	37	55	176
434.06.00	6+6	G 1″	RBM	354,4	115	37	55	176
435.06.00	8+8	G 1″	RBM	428,5	115	37	55	176

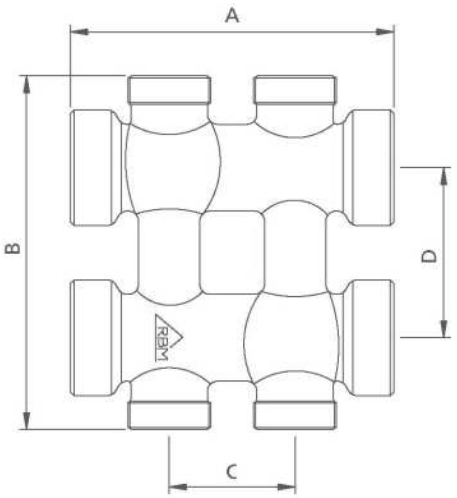

Code	N.ways	Body	Side	A mm	B mm	C mm	D mm
52.05.20	2+2	G 3/4″	RBM	95	104	37	50
52.05.00	4+4	G 3/4″	RBM	169	104	37	50
53.05.00	6+6	G 3/4″	RBM	243	104	37	50
54.05.00	8+8	G 3/4″	RBM	317	104	37	50
55.05.00	10+10	G 3/4″	RBM	391	104	37	50
52.06.20	2+2	G 1″	RBM	95	115	37	55
52.06.00	4+4	G 1″	RBM	169	115	37	55
53.06.00	6+6	G 1″	RBM	243	115	37	55
54.06.00	8+8	G 1″	RBM	317	115	37	55
55.06.00	10+10	G 1″	RBM	391	115	37	55

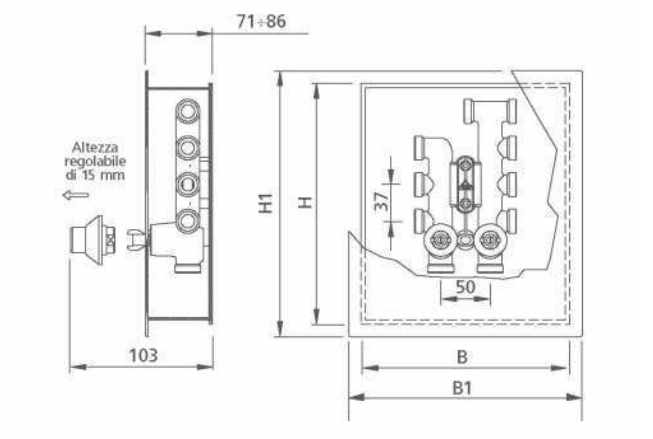

Code	N.ways	Size	B mm	B1 mm	H mm	H1 mm
903.00.50	4+6	G 3/4″	211	236	281	306
903.00.60	6+4	G 3/4″	211	236	281	306
967.00.00	5+3	G 3/4″	211	236	244	269
967.00.10	5+3	G 3/4″	211	236	244	269

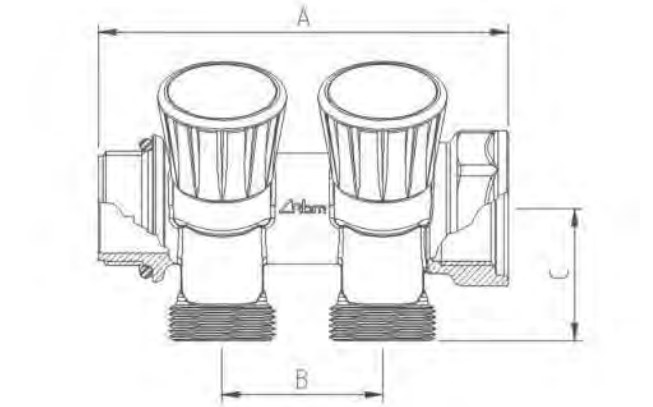

Code	N.ways	Body connections	Side connections	A mm	B mm	C mm
171.05.00	2	G 3/4″	RBM	94,5	37	30,5
172.05.00	3	G 3/4″	RBM	131,5	37	30,5
1330.05.00	4	G 3/4″	RBM	168,5	37	30,5
171.06.00	2	G 1″	RBM	94,5	37	32,5
172.06.00	3	G 1″	RBM	131,5	37	32,5
1330.06.00	4	G 1″	RBM	168,5	37	32,5
2793.05.50	2	G 3/4″	G 1/2″	94,5	37	30,5
2794.05.50	3	G 3/4″	G 1/2″	131,5	37	30,5
2795.05.50	4	G 3/4″	G 1/2″	168,5	37	30,5
2793.06.50	2	G 1″	G 1/2″	94,5	37	32,5
2794.06.50	3	G 1″	G 1/2″	131,5	37	32,5
2795.06.50	4	G 1″	G 1/2″	168,5	37	32,5

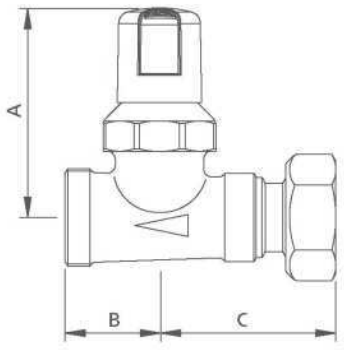

Code	Connections	A mm	B mm	C mm
106.00.00	RBM	52	23,5	44

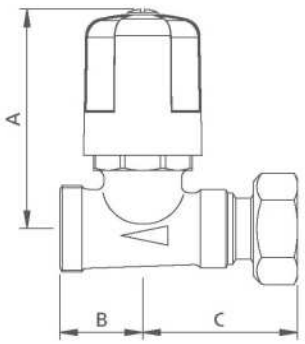

Code	Connections	A mm	B mm	C mm
105.00.00	RBM	62	23,5	44

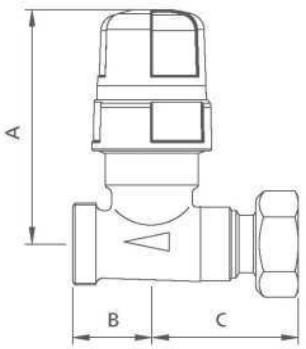

Code	Connections	A mm	B mm	C mm
556.00.00	RBM	69	23,5	44

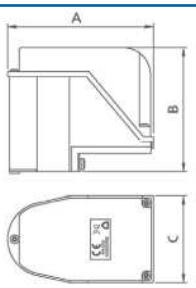

Code	A mm	B mm	C mm
373.00.50	108,5	92	64,5
373.00.60	108,5	92	64,5

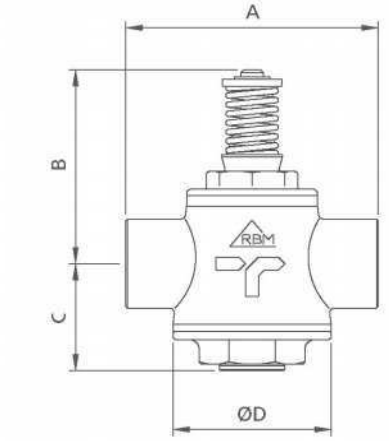

Code	N. ways	Size	A mm	B mm	C mm	D mm
112.04.70	2	G 1/2"	77	59	33	48
112.05.70	2	G 3/4"	77	59	33	48
112.06.70	2	G 1"	81	59	33	48
113.04.70	3	G 1/2"	77	59	33	48
113.05.70	3	G 3/4"	77	59	33	48
113.06.70	3	G 1"	81	59	33	48

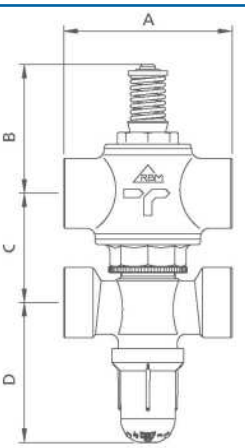

Code	N. ways	Size	A mm	B mm	C mm	D mm
114.05.70	4	G 3/4"	77	59	50 ÷ 55	64
114.06.70	4	G 1"	81	59	50 ÷ 55	66
114.05.20	4	G 3/4"	77	59	114 ÷ 119	64
114.06.20	4	G 1"	81	59	114 ÷ 119	66

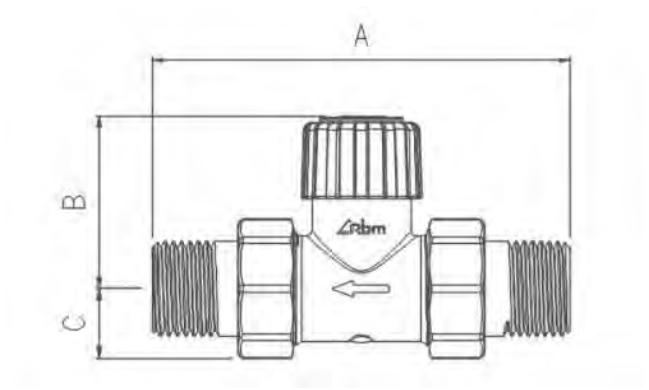

Code	N. ways	Size	A mm	B mm	C mm
814.04.20	2	G 1/2" M	109,8	51	19,5
814.05.20	2	G 3/4" M	116	51	19,5
814.06.20	2	G 1"	123	51	19,5

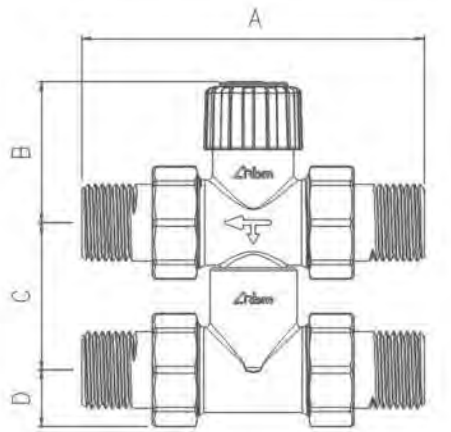

Code	N. ways	Size	A mm	B mm	C mm	D mm
736.04.20	4	G 1/2"	109,8	51	50÷60	19,5
736.05.20	4	G 3/4"	116	51	50÷60	19,5
736.06.20	4	G 1"	123	51	50÷60	19,5

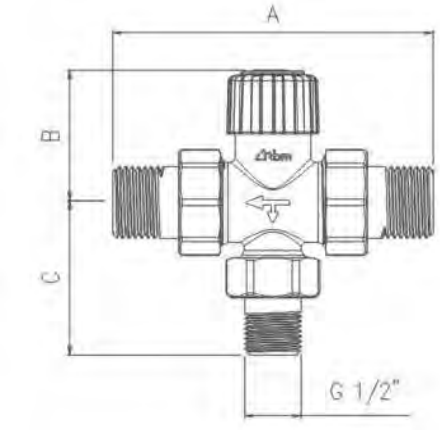

Code	N. ways	Size	A mm	B mm	C mm
813.04.20	3	G 1/2" M	109,8	51	55,2
813.05.20	3	G 3/4" M	116	51	55,2
813.06.20	3	G 1"	123	51	55,2

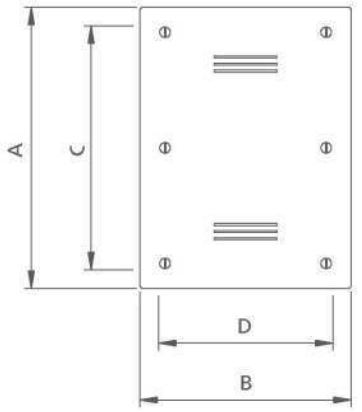

Code	A mm	B mm	C mm	D mm	Depth mm
362.35.00	403	303	350	250	100
362.50.00	553	303	500	250	100
85.35.00	403	303	350	250	-
85.50.00	553	303	500	250	-
85.58.00	633	363	580	310	-
85.40.00	553	453	500	400	-
85.75.00	803	413	750	360	-
86.35.00	403	303	350	250	85÷100
86.50.00	553	303	500	250	85÷100
86.58.00	633	363	580	310	85÷100
86.40.00	553	453	500	400	85÷100
86.75.00	803	413	750	360	95÷120

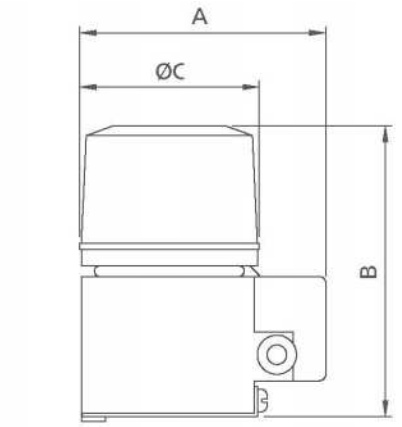

Code	A mm	B mm	C mm
360.00.10	75	89	55
360.00.20	75	89	55
360.00.30	75	89	55
360.00.40	75	89	55

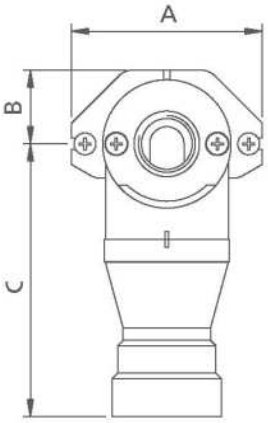

Code	Size	A mm	B mm	C mm
181.00.20	G 1/2"	70	27	100
181.00.30	G 1/2"	70	27	100

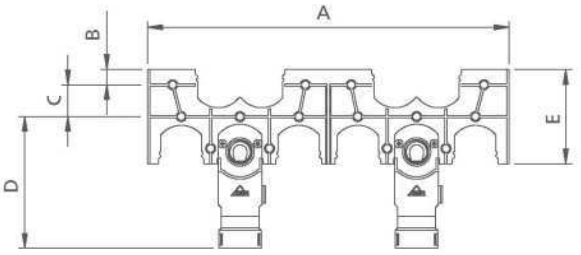

Code	Size	A mm	B mm	C mm	D mm	E mm
185.00.20	G 1/2" F	307	13	27	111,5	80

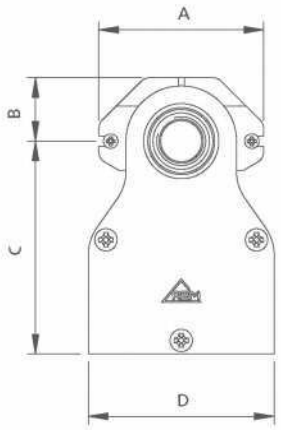

Code	Size	A mm	B mm	C mm	D mm
186.00.00	G 1/2" F	70	27	90,5	79

STATE OF THE ART INSTALLATION OF RBM DEVICES

INSTALLATION

In order to have an optimal system and protect it from damage it is recommended to install the following devices:

- Ball valves
- Filter
- Magnetic anti-scale device
- Pressure reducing valve
- Check valve

PRECAUTIONS

- Always install a filter upstream of the system.
- Perform periodic maintenance of the filters (clean/substitute filter cartridge when needed).
- Respect the arrow on the body of the device (flow direction ▻) when installing them.
- Use ball valves to allow maintenance operations.
- Clean the pipes upstream and downstream of the system in order to avoid damages.

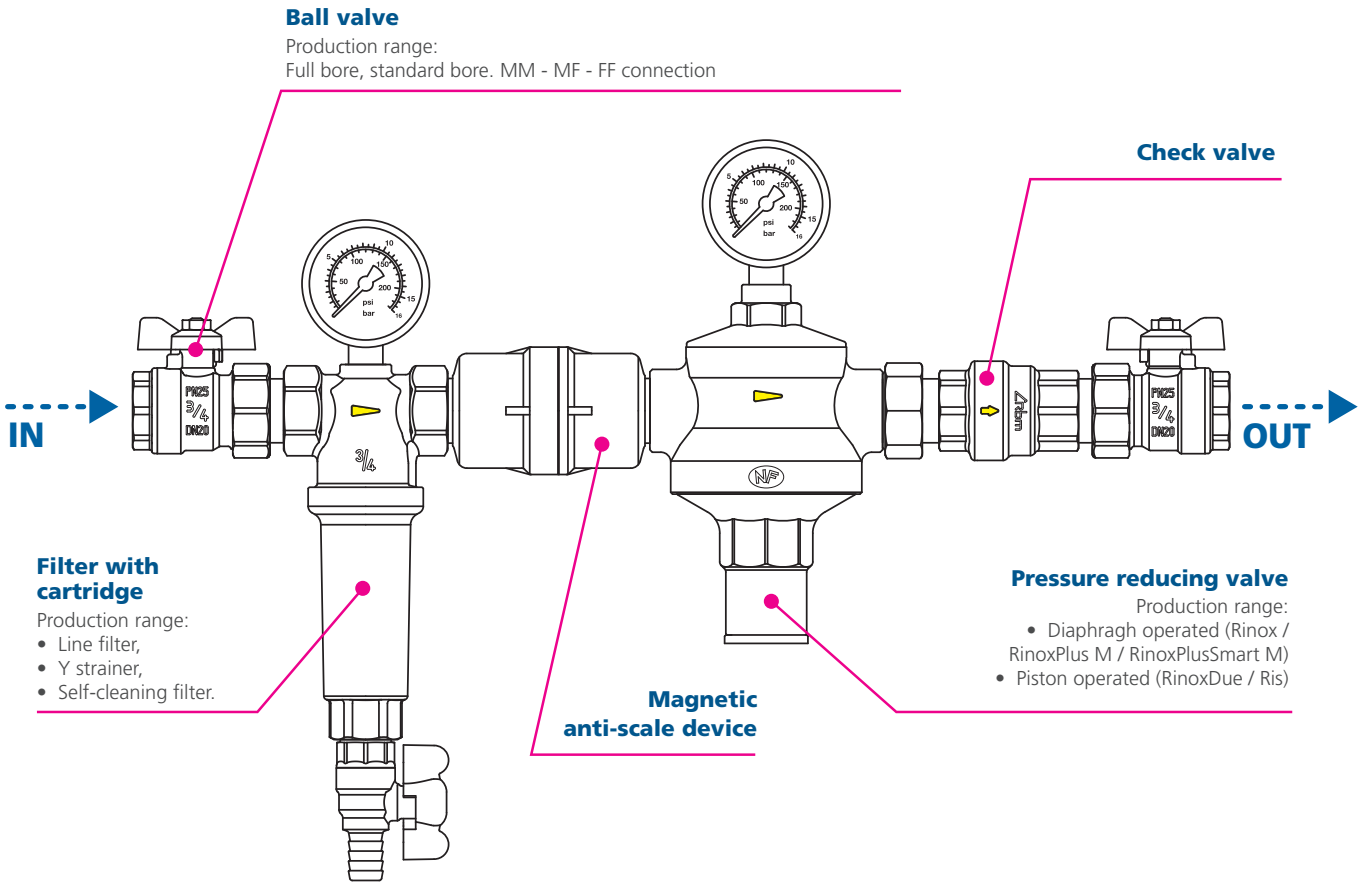


RBM
Kilma

RADIANT HEATING AND COOLING SYSTEMS

SYSTÈMES DE CHAUFFAGE ET DE CLIMATISATION PAR RAYONNEMENT

СИСТЕМЫ РАДИАТОРНОГО ОТОПЛЕНИЯ И ОХЛАЖДЕНИЯ

SISTEME DE ÎNCĂLZIRE ŞI CLIMATIZARE RADIANTĂ

SISTEMAS DE CALEFACCIÓN Y CLIMATIZACIÓN RADIANTE

STRAHLUNGS-HEIZ- UND KLIMASYSTEME

1. RADIANT HEATING AND COOLING SYSTEMS PAG. 225


RBM
Kilma

RADIANT HEATING AND COOLING SYSTEMS

SYSTEMES DE CHAUFFAGE ET DE CLIMATISATION PAR RAYONNEMENT

СИСТЕМЫ РАДИАТОРНОГО ОТОПЛЕНИЯ И ОХЛАЖДЕНИЯ

SISTEME DE ÎNCĂLZIRE ŞI CLIMATIZARE RADIANTĂ

SISTEMAS DE CALEFACCION Y CLIMATIZACION RADIANTE

STRAHLUNGS-HEIZ-UND KLIMASYSTEME

Insulating panels	pag. 227	
KILMA-BOARD radiant panel	pag. 233	
Polyethylene / Multilayer pipes	pag. 235	
Accessories for radiant floor heating systems	pag. 239	
Prefabricated radiant panels distribution	pag. 246	
Modular control units for low and high temperature circuits	pag. 249	
Distribution manifolds	pag. 260	
Housing boxes	pag. 278	
Single-zone temperature control - Kilma Basic2 system	pag. 282	
Accessories	pag. 285	
Belt system - with skirting board	pag. 294	

KILMA-FUTURA

RBM Kilma

INNOVATIVE SYSTEM FOR DRY UNDERFLOOR RADIANT HEATING SYSTEMS

Kilma-Futura system with **ceramic covering glued** directly onto the panel



Kilma-Futura system with **floating parquet covering**

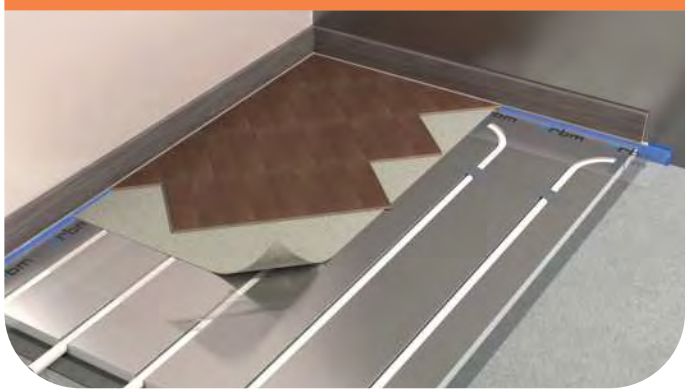

Kilma-Futura system with **glued parquet covering**

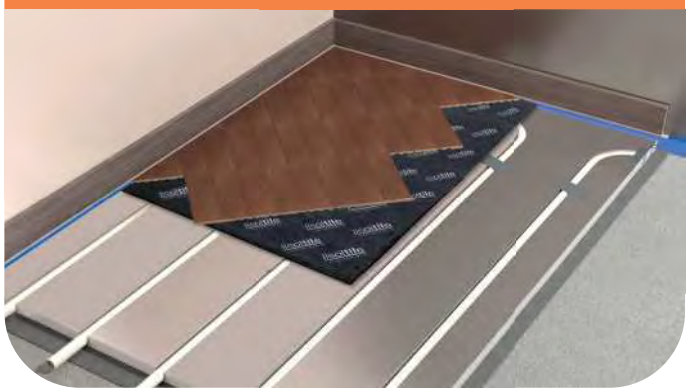



SYSTEM REACHES STANDARD TEMPERATURE IN ONLY 43 MINUTES

(traditional systems: over 6 hours)

ONLY 28 mm



FINISHED RADIANT UNDERFLOOR SYSTEM **IN 28 MM**

- Without screed
- Ideal for restorations and homes with high energy efficiency
- Low thermal inertia

2926



Installation spacing 100 mm
Pas de pose 100 mm
Шаг укладки 100 мм
Pas de aplicare 100 mm
Paso de colocación 100 mm
Verlegeabstand 100 mm

Code	Useful Dim. (mm)	Insul. Th. (mm)	Heat Res.	Pack	Pack m²	Pallet m²
2926.25.12	1175x800x25	25	0,533	5	4,70	84,60
2926.33.12	1175x800x33	33	0,780	5	4,70	65,80
2926.48.12	1175x800x48	48	1,250	5	4,70	47

KILMA-FUTURA
"KILMA-FUTURA" panel.

Installation spacing 100 mm

Suitable for making circuits with 100mm pipe spacing. Coil circuit laying.

Panel obtained from EPS 300 sheet, milled to allow piping to be laid, top coating with an aluminium layer.

- Real size: 1175x800 mm
- Usable floor area 0.94 m²

HBCD FREE

035

Applicable piping diameter: 16 mm
Applicable piping type: Polyethylene Kilma-Flex
For panel laying it is advisable to use specific adhesives compatible with ESP and substrate (for example with cement-based substrate use ELASTORAPID RBM by MAPEI or similar products).
To prevent the pipe from coming off the retention guides and to restore the aluminised film (in case this has been removed during operations performed at the building site) use the anodised aluminium adhesive tape code 2018.00.02

2926



Installation pitch 150 mm
Pas de pose 150 mm
Шаг укладки 150 мм
Pas de aplicare 150 mm
Paso de colocación 150 mm
Verlegeabstand 150 mm

Code	Useful Dim. (mm)	Insul. Th. (mm)	Heat Res.	Pack	Pack m²	Pallet m²
2926.17.02	1175x750x17	17	0,265	10	8,80	114,40
2926.25.02	1175x750x25	25	0,587	5	4,40	79,20

KILMA-FUTURA
"KILMA-FUTURA" panel.

Installation pitch 150 mm

Suitable for making circuits with 150mm pipe spacing. Coil circuit laying.

Panel obtained from EPS 300 sheet, milled to allow piping to be laid, top coating with an aluminium layer.

- Real size: 1175x750 mm
- Usable floor area 0.88 m²

HBCD FREE

035

Applicable piping diameter: 16 mm
Applicable piping type: Polyethylene Kilma-Flex
For panel laying it is advisable to use specific adhesives compatible with ESP and substrate (for example with cement-based substrate use ELASTORAPID RBM by MAPEI or similar products).
To prevent the pipe from coming off the retention guides and to restore the aluminised film (in case this has been removed during operations performed at the building site) use the anodised aluminium adhesive tape code 2018.00.02

1188

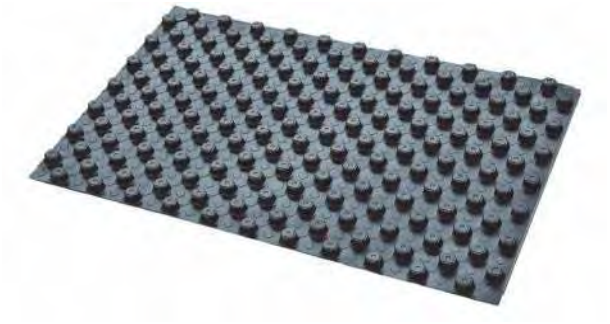

Kilma STRONG thermoformed sheet
Feuille thermoformée Kilma STRONG
Термоформованный лист Kilma STRONG
Folie formată termic Kilma STRONG
Hoja termoformada Kilma STRONG
Blatt thermogeformt Kilma STRONG

Code	Useful Dim. (mm)	Pack	Pack m²	Pallet m²
1188.20.02	1300x800x23	24	24,96	124,80

KILMA-STRONG
Kilma STRONG thermoformed sheet

Pre-formed foil sheet in printed shockproof polystyrene.
Suitable for the creation of 50 mm multiple pitch circuits.
Coupling by the overlapping of the pre-formed foil itself on one side.

- Real size: 1350x850 mm
- Useful Dim. 1300x800 mm
- Usable floor area 1.04 m²
- Foil thickness 1 mm

It is highly resistant to pressure from foot traffic.
Applicable piping diameter: 14÷17 mm.

035

1361



"Kilma-SUPER-STRONG" panel
Panneau « Kilma-SUPER-STRONG »
Панель "Kilma-SUPER-STRONG"
Panou „Kilma-SUPER-STRONG"
Panel "Kilma-SUPER-STRONG"
Platte „Kilma-SUPER-STRONG"

Code	Useful Dim. (mm)	Insul. Th. (mm)	Heat Res.	Pack	Pack m²	Pallet m²
1361.10.00	1300x800x33	10	0,303	18	18,72	93,60
1361.18.00	1300x800x40	18	0,545	14	14,56	72,80
1361.28.00	1300x800x50	28	0,848	10	10,40	52
1361.42.00	1300x800x65	42	1,273	7	7,28	36,40
1361.50.00	1300x800x73	50	1,515	6	6,24	31,20

KILMA-SUPER-STRONG
"KILMA-SUPER-STRONG" panel.

Insulating panel made of sintered expanded polystyrene closed-cell foam, with preformed relief parts for pipe housing, combined with anti-collision polystyrene pre-formed sheet.
Suitable panel to make circuits with a 50mm pitch and multiple circuits.
Coupling with an overlap of the pre-formed foil on one side.

- Real size: 1350x850 mm
- Useful Dim. 1300x800 mm
- Usable floor area 1.04 m²
- Foil thickness 0.6 mm
- EPS 150
- Euroclass E

Compliant with UNI-EN 13163
- UNI 331 IIP certified - HBCD FREE

It is highly resistant to pressure from foot traffic.
Applicable piping diameter: 14÷17 mm.

035

734



"Kilma-FORM" panel
Panneau "Kilma-FORM"
Панель "Kilma-FORM"
Panou „Kilma-FORM"
Panel "Kilma-FORM"
Platte „Kilma-FORM"

Code	Useful Dim. (mm)	Insul. Th. (mm)	Heat Res.	Pack	Pack m²	Pallet m²
734.15.12	1200x800x40	15	0,450	16	15,36	61,44
734.25.12	1200x800x50	25	0,750	13	12,48	49,92
734.35.12	1200x800x60	35	1,000	10	9,60	38,40
734.42.12	1200x800x67	42	1,250	9	8,64	34,56
734.58.12	1200x800x83	58	1,700	7	6,72	26,88
734.71.12	1200x800x96	71	2,100	6	5,76	23,04

KILMA-FORM
"KILMA-FORM" panel.

Insulating panel made of stamped sintered expanded polystyrene closed-cell foam, with pre-formed relief parts for pipe housing, combined with "PS" film.
Grooves undercut spacing 50mm for the realisation of 50 mm multiple pitch circuits
Coupling possible by male/female peripheral interlocking joints.

- Real size: 1223x823 mm
- Net size: 1200x800 mm
- Usable floor area 0.96 m²
- EPS 150
- Euroclass E

035

Compliant with UNI-EN 13163 - UNI 331 IIP certified - CSTB 250-179 certified - HBCD FREE

Applicable piping diameter: 16÷20 mm

1938



"Kilma-BULL" panel
Panneau "Kilma-BULL"
Панель "Kilma-BULL"
Panou „Kilma-BULL"
"Kilma-BULL" panel
Platte „Kilma-BULL"

Code	Pack m²	Pallet m²
1938.13.00	19,20	76,80
1938.25.00	13,44	53,76
1938.40.00	9,60	38,40

KILMA-BULL
"Kilma-BULL" panel.

Insulating panel made of stamped sintered expanded polystyrene closed-cell foam, with pre-formed relief parts for pipe housing, combined with "PS" film.
Grooves undercut spacing 50mm for the realisation of 50 mm multiple pitch circuits
Coupling possible by male/female peripheral interlocking joints.

- Real size: 1223x823 mm
- Net size: 1200x800 mm
- Usable floor area 0.96 m²
- EPS 200 (thickness 33 mm) - EPS 150 (thickness 45-60 mm)
- Euroclass E

035

Compliant with UNI-EN 13163 - UNI 331 IIP certified - CSTB 250-179 certified - HBCD FREE

Applicable piping diameter: 16÷20 mm

3167

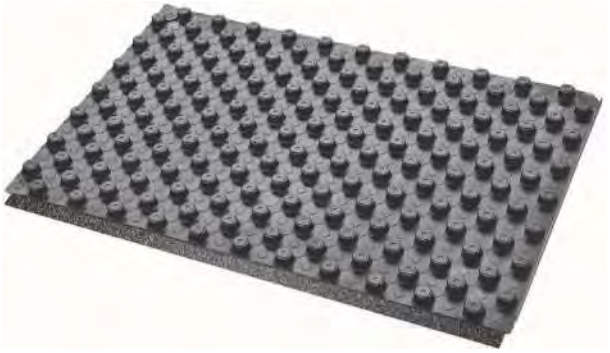

"Kilma-SILENT-STRONG" panel
Panneau « Kilma-SILENT-STRONG »
Панель "Kilma-SILENT-STRONG"
Panou „Kilma-SILENT-STRONG"
Panel "Kilma-SILENT-STRONG"
Platte „Kilma-SILENT-STRONG"

Code	Useful Dim. (mm)	Pack	Pack m²
3167.25.00	1300x800x28	15	15,60

KILMA-SILENT-STRONG
"KILMA-SILENT-STRONG" panel.

Pre-formed grooves for pipe housing, combined with shockproof polystyrene pre-formed foil sheet, coupled with sound-absorbing layer.
Suitable for the creation of 50 mm multiple pitch circuits.
Coupling by overlapping pre-formed foil on one side.

- Sound pressure level from foot traffic: Ln1W 58 dB.
- Real size: 1350x950 mm
- Net size: 1300x800 mm
- Usable floor area 1.04 m²
- Foil thickness 1 mm

035

CERTIFIED sound-absorbing panel!
It is highly resistant to pressure from foot traffic.
Applicable piping diameter: 14÷17 mm.

2533

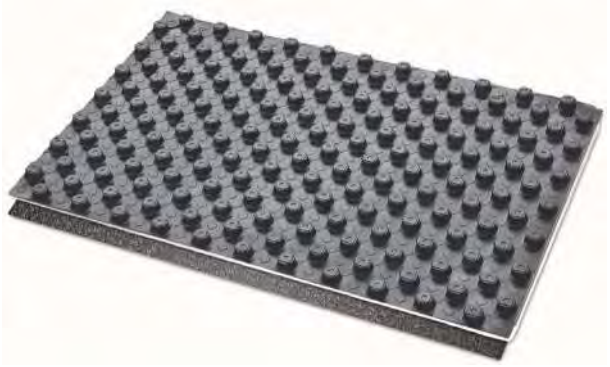

"Kilma-SILENT-SUPERSTRONG" panel
Panneau « Kilma-SILENT-SUPERSTRONG »
Панель "Kilma-SILENT-SUPERSTRONG"
Panou „Kilma-SILENT-SUPERSTRONG"
Panel "Kilma-SILENT-SUPERSTRONG"
Platte „Kilma-SILENT-SUPERSTRONG"

Code	Useful Dim. (mm)	Insul. Th. (mm)	Heat Res.	Pack	Pack m²
2533.15.00	1300x800x38	10 + 5	0,455	12	12,48
2533.23.00	1300x800x45	18 + 5	0,697	10	10,40
2533.33.00	1300x800x55	28 + 5	1,000	8	8,32
2533.47.00	1300x800x70	42 + 5	1,424	6	6,24

KILMA-SILENT-SUPERSTRONG
"KILMA-SILENT-SUPERSTRONG" panel.

Insulating panel made of sintered expanded polystyrene closed-cell foam, with pre-formed relief parts for pipe housing, combined with anti-collision polystyrene pre-formed sheet and sound-absorbing mat.
Suitable panel to make circuits with a 50mm pitch and multiple circuits.
Coupling with an overlap of the pre-formed foil on one side.

- Sound pressure level from foot traffic: Ln1W 58 dB.
- Real size: 1350x950 mm
- Net size: 1300x800 mm - Usable floor area 1.04 m²
- Foil thickness 0.6 mm
- EPS 150
- Euroclass E

035

Compliant with UNI-EN 13163
- UNI 331 IIP certified - HBCD FREE

CERTIFIED sound-absorbing panel!
It is highly resistant to pressure from foot traffic.
Applicable piping diameter: 14÷17 mm.

THERMO-ACOUSTIC PANEL
KILMA SILENT-SUPERSTRONG



RBM Kilma + MAPEI

From the union of **RBM "Kilma Superstrong®"**
and the sound-absorbing mat **"Mapesilent®" by Mapei**
come **the revolutionary certified thermo-acoustic panel**

RBM "KILMA SILENT-SUPERSTRONG®"

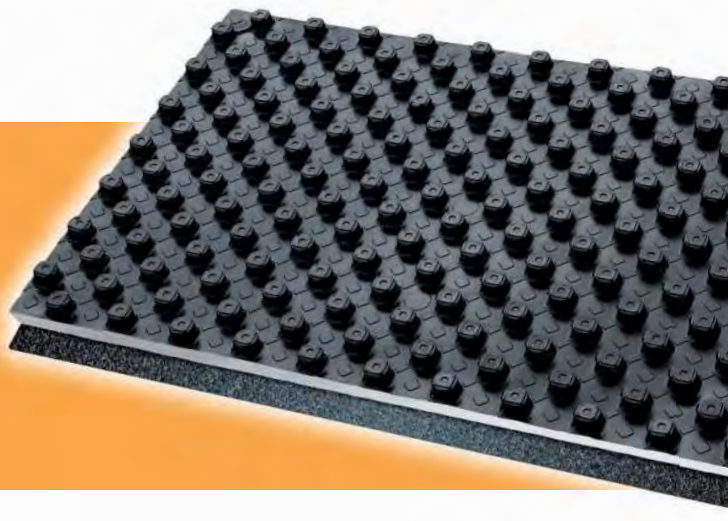

Level of sound pressure from stamping

58 dB on site

693



"Kilma-PIANO" panel
Panneau « Kilma-PIANO »
Панель "Kilma-PIANO"
Panou „Kilma-PIANO"
Panel "Kilma-PIANO"
Platte „Kilma-PIANO"

Code	Useful Dim. (mm)	Insul. Th. (mm)	Heat Res.	Pack	Pack m²
693.20.02	1200x750x20	15 - 20	0,582	30	27
693.30.02	1200x750x30	25 - 30	0,885	20	18
693.42.02	1200x750x42	37 - 42	1,250	15	13,50
693.47.02	1200x750x47	42 - 47	1,400	13	11,70

KILMA-PIANO
"KILMA-PIANO" panel.

Floor insulation panel in sintered expanded polystyrene, closed-cell printed, coupled with PS" film.
Suitable panel to make circuits with a 50mm pitch and multiple circuits.
Coupling possible by male/female peripheral interlocking joints.

- Real size: 1220x770 mm
- Net size: 1200x750 mm
- Usable floor area 0.90 m²
- EPS 150
- Euroclass E

035

Compliant with UNI-EN 13163
- UNI 331 IIP certified - HBCD FREE

1997



Prefabricated radiant panel
Panneau rayonnant préfabriqué
Готовые радиаторные панели (полуфабрикат)
Panou radiant prefabricat
Panel radiante prefabricado
Fertigteil-Strahlplatte

Code	Useful Dim. (mm)	Pack	Carton
1997.00.00	1.200x2.000x45	1	1

KILMA BOARD 600
"KILMA BOARD 600" prefabricated radiant panel.

Prefabricated sandwich radiant panel made of:
exposed layer in fireproof plasterboard, certified Class 1, thickness 15 mm;
N. 2 radiant autobalancing circuits, shock-proof, made of cross-linked polyethylene pipe with oxygen barrier, section Ø 8x1 embedded in the layer of plasterboard;
expanded polystyrene back insulating layer, UNI EN 13163, Euroclass E fireproof, density 30 Kg/m^3 th. 30 mm.

- Max operating temperature: 80 °C
- Max operating pressure of circuit: 2.5 Bar
- Max test pressure of the circuit: 4 Bar
- n. independent circuits: 2
- Pressure drop per circuit: 0,1 Bar
- Thermal Resistance: 0.874 m^{2}K/W
- Panel weight: 34.6 kg
- Dimensions WxHxD: 1200x2000x45 mm
- Panel surface area: 2.4 m^2

It is essential to use the panel with 4 bushes code 936.08.00 (pipe reinforcement), not included in the pack (see page 248) - included in the manifolds

043

1997



KILMA BOARD 300 S Prefabricated radiant panel.
KILMA BOARD 300 S Panneau radiant préfabriqué
KILMA BOARD 300 S Готовая радиаторная панель (полуфабрикат)
KILMA BOARD 300 S Panou radiant prefabricat
KILMA BOARD 300 S Panel radiante prefabricado
KILMA BOARD 300 S Fertigteil-Strahlplatte

Code	Useful Dim. (mm)	Pack	Carton
1997.00.10	1.200x1.000x45	1	1

KILMA BOARD 300 L Prefabricated radiant panel
KILMA BOARD 300 L Panneau radiant préfabriqué
KILMA BOARD 300 L Готовая радиаторная панель (полуфабрикат)
KILMA BOARD 300 L Panou radiant prefabricat
KILMA BOARD 300 L Panel radiante prefabricado
KILMA BOARD 300 L Fertigteil-Strahlplatte

Code	Useful Dim. (mm)	Pack	Carton
1997.00.20	600x2.000x45	1	1

"KILMA BOARD 300" prefabricated radiant panel.

Prefabricated sandwich radiant panel made of:
exposed layer in fireproof plasterboard, certified Class 1, thickness 15 mm;
N. 1 radiant autobalancing circuit, shock-proof, made of cross-linked polyethylene pipe with oxygen barrier, section Ø 8x1 embedded in the layer of plasterboard;
expanded polystyrene back insulating layer, UNI EN 13163, Euroclass E fireproof, density 30 Kg/m^3 th. 30 mm.

- Max operating temperature: 80 °C
- Max operating pressure of circuit: 2.5 Bar
- Max test pressure of the circuit: 4 Bar
- n. independent circuits: 1
- Pressure drop per circuit: 0,1 Bar
- Thermal Resistance: 0.874 m^{2}K/W
- Panel weight: 17.3 kg
- Dimensions WxHxD: 1200x1000x45 mm / 600x2000x45 mm
- Panel surface area: 1.2 m^2

It is essential to use the panel with 4 bushes code 936.08.00 (pipe reinforcement), not included in the pack (see page 248) - included in the manifolds

043

1997



Prefabricated radiant panel
Panneau rayonnant préfabriqué
Готовые радиаторные панели (полуфабрикат)
Panou radiant prefabricat
Panel radiante prefabricado
Fertigteil-Strahlplatte

Code	Useful Dim. (mm)	Pack	Carton
1997.00.30	600x1.000x45	1	1

KILMA BOARD 150
"KILMA BOARD 150" prefabricated radiant panel.

Prefabricated sandwich radiant panel made of:
exposed layer in fireproof plasterboard, certified Class 1, thickness 15 mm;
N. 1 radiant autobalancing circuit, shock-proof, made of cross-linked polyethylene pipe with oxygen barrier, section Ø 8x1 embedded in the layer of plasterboard;
expanded polystyrene back insulating layer, UNI EN 13163, Euroclass E fireproof, density 30 Kg/m^3 th. 30 mm.

- Max operating temperature: 80 °C
- Max operating pressure of circuit: 2.5 Bar
- Max test pressure of the circuit: 4 Bar
- n. independent circuits: 1
- Pressure drop per circuit: 0,1 Bar
- Thermal Resistance: 0.874 m^{2}K/W
- Panel weight: 8.6 kg
- Dimensions WxHxD: 600x1000x45 mm
- Panel surface area: 0.6 m^2

It is essential to use the panel with 2 bushes code 936.08.10 (pipe reinforcement) not included in the pack (see page 248)

043

1083



Prefabricated plugging panel
Panneau de remplissage préfabriqué
Закрывающие готовые панели
Panou tampon prefabricat
Panel de amortiguación prefabricado
Fertigteil-Ausfachungsplatte

Code	Useful Dim. (mm)	Pack	Carton
1083.00.02	1.200x2.000x45	1	1

Prefabricated plugging panel.

Prefabricated sandwich radiant panel made of:
exposed layer in fireproof plasterboard, certified Class 1, thickness 15 mm;
expanded polystyrene back insulating layer, UNI EN 13163, Euroclass E fireproof, density 30 Kg/m^3 th. 30 mm.

- Dimensions WxHxD: 1.200x2.000x45 mm
- Panel weight 31.5 kg
- Thermal resistance 0.874 m^{2}K/W

Enables the completion of the non radiant surfaces, with a curtain wall homogeneous in insulation and in thickness

043

2517



Pipe Kilma HI-PERFORMANCE PLUS.

4-layer polyethylene pipe for underfloor heating (PE-RT Type II/EVOH/PE-RT).
The outer layer provides strong protection of the EVOH layer against the defects of mechanical agents. (e.g. scratches, gouges ...).
EVOH oxygen barrier pipe, co-extruded, DIN 4726.

Compliant with: EN ISO 22391-2 - KOMO (ø16x2)

Externally protected EVOH barrier against any mechanical damage. Full KOMO certified range available. Contact our sales department for the ordering codes.

Pipe Kilma HI-PERFORMANCE PLUS
Tube Kilma HI-PERFORMANCE PLUS
Труба Kilma HI-PERFORMANCE PLUS
Tub Kilma HI-PERFORMANCE PLUS
Tubo Kilma HI-PERFORMANCE PLUS
Rohr Kilma HI-PERFORMANCE PLUS

Code	Size	Model	Roll (m)	Pack	Pallet m
2517.16.12*	16x2	*	120	1	1680
2517.16.02*	16x2	*	240	1	1680
2517.16.22*	16x2	*	600	1	3600
2517.17.12*	17x2	*	120	1	1680
2517.17.02*	17x2	*	240	1	1680
2517.17.22*	17x2	*	600	1	3600
2517.20.02*	20x2	*	240	1	1680
2517.20.32*	20x2	*	500	1	2000

** PE-RT Type II/EVOH/PE-RT*
Size: Outside Ø x pipe thickness.

033TH

464



Pipe KILMA-FLEX PE-Xc.

3-layers polyethylene pipe for underfloor heating.
EVOH oxygen barrier pipe, co-extruded, DIN 4726.

- Type: PE-Xc

Compliant with: EN ISO 15875-2

Do not expose to direct sunlight.

Kilma-FLEX PE-Xc pipe
Tube Kilma-FLEX PE-Xc
Труба Kilma-FLEX PE-Xc
Tub Kilma FLEX PE-Xc
Tubo Kilma-FLEX PE-Xc
Rohr Kilma-FLEX PE-Xc

Code	Size	Model	Roll (m)	Pack	Pallet m
464.16.02	16x2	PE-Xc	120	1	1680
464.16.12	16x2	PE-Xc	240	1	1680
464.16.22	16x2	PE-Xc	600	1	3600
464.17.12	17x2	PE-Xc	120	1	1680
464.17.02	17x2	PE-Xc	240	1	1680
464.17.22	17x2	PE-Xc	600	1	3600
464.20.02	20x2	PE-Xc	240	1	1680
464.20.32	20x2	PE-Xc	500	1	2000
464.25.02	25x2,3	PE-Xc	240	1	960
464.25.22	25x2,3	PE-Xc	310	1	1240

Cross-linked polyethylene according to the "C" method with Beta type rays.
Size: Outside Ø x pipe thickness.

033C

464



Pipe KILMA-FLEX PE-Xc.

3-layers polyethylene pipe for underfloor heating.
EVOH oxygen barrier pipe, co-extruded, DIN 4726.

- Type: PE-Xc

Compliant with: EN ISO 15875-2

Do not expose to direct sunlight.

Kilma-FLEX PE-Xc pipe
Tube Kilma-FLEX PE-Xc
Труба Kilma-FLEX PE-Xc
Tub Kilma FLEX PE-Xc
Tubo Kilma-FLEX PE-Xc
Rohr Kilma-FLEX PE-Xc

Code	Size	Model	Roll (m)	Pack	Pallet m
464.08.02	8x1	PE-Xc	1000	1	7000
464.08.12	8x1	PE-Xc	100	1	1200

Cross-linked polyethylene according to the "C" method with Beta type rays.
Size: Outside Ø x pipe thickness.

033C

464



033C

Pipe KILMA-FLEX PE-Xc.

3-layers polyethylene pipe for underfloor heating.
EVOH oxygen barrier pipe, co-extruded, DIN 4726.

- Type: PE-Xc

Compliant with: EN ISO 15875-2

Do not expose to direct sunlight.

Kilma-FLEX PE-Xc pipe
Tube Kilma-FLEX PE-Xc
Трубa Kilma-FLEX PE-Xc
Tub Kilma FLEX PE-Xc
Tubo Kilma-FLEX PE-Xc
Rohr Kilma-FLEX PE-Xc

Code	Size	Model	Roll (m)	Pack	Pallet m
464.10.02	10x1,2	PE-Xc	1000	1	7000
464.10.12	10x1,2	PE-Xc	120	1	1440

Cross-linked polyethylene according to the "C" method with Beta type rays.
Size: Outside Ø x pipe thickness.

1484



033T

Pipe KILMA-FLEX PE-RT.

3-layers polyethylene pipe for underfloor heating.
EVOH oxygen barrier pipe, co-extruded, DIN 4726.

- Type: PE-RT

Compliant with: EN ISO 22391-2

Do not expose to direct sunlight.

Pipe Kilma-FLEX PE-RT
Tube Kilma-FLEX PE-RT
Трубa Kilma-FLEX PE-RT
Tub Kilma FLEX PE-RT
Tubo Kilma-FLEX PE-RT
Rohr Kilma-FLEX PE-RT

Code	Size	Model	Roll (m)	Pack	Pallet m
1484.16.22	16x2	PE-RT	120	1	1680
1484.16.32	16x2	PE-RT	240	1	1680
1484.16.02	16x2	PE-RT	600	1	3600
1484.17.12	17x2	PE-RT	120	1	1680
1484.17.02	17x2	PE-RT	240	1	1680
1484.17.22	17x2	PE-RT	600	1	3600
1484.20.02	20x2	PE-RT	500	1	2000
1484.25.12	25x2,3	PE-RT	240	1	960
1484.25.02	25x2,3	PE-RT	310	1	1240

Polyethylene of raised temperature resistance.
Size: Outside Ø x pipe thickness

2009



033A

Pipe KILMA-FLEX PE-Xa.

3-layers polyethylene pipe for underfloor heating.
EVOH oxygen barrier pipe, co-extruded, DIN 4726.

- Type: PE-Xa

Compliant with: EN ISO 15875-2

Do not expose to direct sunlight.

Pipe Kilma-FLEX PE-Xa
Tube Kilma-FLEX PE-Xa
Трубa Kilma-FLEX PE-Xa
Tub Kilma FLEX PE-Xa
Tubo Kilma-FLEX PE-Xa
Rohr Kilma-FLEX PE-Xa

Code	Size	Model	Roll (m)	Pack	Pallet m
2009.17.02	17x2	PE-Xa	600	1	2400
2009.20.02	20x2	PE-Xa	500	1	4000

Cross-linked polyethylene according to the "A" method with peroxides.
Size: Outside Ø x pipe thickness.

1542



PE-Xc RBM Tita-fix multilayer pipe.

Multilayer pipe for underfloor heating in polyethylene, aluminium and polyethylene. Welded aluminium layer type A

- Composition PE-Xc/Al/PE-RT
- White
- Poper 10 Bar
- Tmal 95 °C
- Duration at operating conditions ~ 50 years
- Type: PE-Xc

Compliant with: EN ISO 21003 - DM 174/04

The entire package must be ordered.

Multi-layer pipe TITA-FIX PE-Xc
PE-Xc Tube multicouche TITA-FIX
PE-Xc металлопластиковая труба TITA-FIX
PE-Xc Conductă multistrat TITA-FIX
PE-Xc Tubo multicapa TITA-FIX
PE-Xc Mehrschichtverbundrohr TITA-FIX

Code	Size	Model	Roll (m)	Pack	Pallet m
1542.16.00	16x2	PE-Xc	100	1	1400
1542.16.40	16x2	PE-Xc	250	1	2500
1542.16.30	16x2	PE-Xc	500	1	3000
1542.20.00	20x2	PE-Xc	100	1	1400
1542.26.00	26x3	-	50	1	550
1542.32.00	32x3	-	50	1	600
1542.20.40	20x2	PE-Xc	250	1	1750

Multi-layer pipe in cross-linked polyethylene (PE-Xc).
Size: Outside Ø x pipe thickness

033MC

1545



PE-RT RBM Tita-fix multilayer pipe.

Multilayer pipe for underfloor heating in polyethylene, aluminium and polyethylene. Welded aluminium layer type A

- Composition PE-RT/Al/PE-RT
- White
- Poper 10 Bar
- Tmal 95 °C
- Duration at operating conditions ~ 50 years
- Type: PE-RT

Compliant with: EN ISO 21003 - DM 174/04

Multi-layer pipe TITA-FIX PE-RT
PE-RT Tube multicouche TITA-FIX
PE-RT металлопластиковая труба TITA-FIX
PE-RT Conductă multistrat TITA-FIX
PE-RT Tubo multicapa TITA-FIX
PE-RT Mehrschichtverbundrohr TITA-FIX

Code	Size	Model	Roll (m)	Pack	Pallet m
1545.16.00	16x2	PE-RT	100	100	1400
1545.16.20	16x2	PE-RT	250	250	2500
1545.16.10	16x2	PE-RT	500	500	3000
1545.20.00	20x2	PE-RT	100	100	1400
1545.20.10	20x2	PE-RT	250	250	1750
1545.20.50	20x2	PE-RT	500	500	2500
1545.26.00	26x3	-	50	1	550
1545.32.00	32x3	-	50	1	600
1545.40.00	40x3,5	-	25	1	300

Multi-layer pipe in polyethylene of greater thermal resistance (PE-RT).
Size: Outside Ø x pipe thickness

033MT

1541



PE-Xc RBM Tita-fix multilayer pipe externally insulated with closed cell expanded polyethylene anti-condensation conduit, CFC-free, flame retardant.

Pipe features as in code 1542-1543.

Insulating conduit features:
- Density 35 kg/m³
- Thermal conductivity at 40 °C
- conduit only 0.038 W/mK
- conduit+pipe (average value) 0.062 W/mK
- Steam permeability μ 5.482
- Insulation thickness 10 mm

Compliant with: EN ISO 21003 - It. MD 174/04 - It. Law 10/91 (insulation)

Suitable for hydronic refrigeration and heating systems
Installation compliant with the law 10/91 and valid for pipes running in heated environments and/or structures not bordering with the outside or with unheated rooms.

PE-Xc RBM Tita-fix multilayer pipe in roll with thermal anti-condensation insulation
Tube multicouche PE-Xc RBM Tita-fix en rouleau à isolation thermique anti-condensation
Металлопластиковая труба PE-Xc RBM Tita-fix в бухтах
Conductă multistrat PE-Xc RBM Tita-fix în colac cu izolare termică împotriva condensului
Tubo multicapa PE-Xc RBM Tita-fix con aislamiento térmico anticondensación, en rollos
Mehrschichtverbundrohr PE-Xc RBM Tita-fix auf Rolle mit kondensfestem Wärmeschutz

Codice	Misura	Modello	Rotolo (m)	Conf.	Pallet m
1541.16.40	16x2	-	50	1	550
1541.20.40	20x2	PE-Xc	50	1	550
1541.26.40	26x3	-	50	1	550
1541.32.40	32x3	-	25	1	325

Multi-layer pipe in cross-linked polyethylene (PE-Xc).
Size: Outside Ø x pipe thickness

033MC

1544



PE-RT RBM Tita-fix multilayer pipe externally insulated with closed cell expanded polyethylene anti-condensation conduit, CFC-free, flame retardant.

Pipe features as in code 1545-1546.

Insulating conduit features:
- Density 35 kg/m^3
- Thermal conductivity at 40 °C
- conduit only 0.038 W/mK
- conduit+pipe (average value) 0.062 W/mK
- Steam permeability μ 5.482
- Insulation thickness 10 mm

Compliant with: EN ISO 21003 - It. MD 174/04 - It. Law 10/91 (insulation)

Suitable for hydronic refrigeration and heating systems.
Insulation compliant with It. law 10/91 and valid for pipes installed in heated premises and/or facilities facing neither outside nor unheated rooms.

033MT

Multilayer pipe TITA-FIX PE-RT with anti-condensation thermal insulation
Tuyau multitouche TITA-FIX PE-RT avec isolation thermique anti-condensation
Многослойная труба TITA-FIX PE-RT с термоизоляцией против конденсата
Tub multistrat TITA-FIX PE-RT, cu izolație termică anticondens
Tubo multicapa TITA-FIX PE-RT con aislamiento térmico anticondensación
Mehrschichtverbundrohr TITA-FIX PE-RT mit kondensfester Wärmedämmung

Code	Size	Model	Roll (m)	Pack	Pallet m
1544.16.40	16x2	-	50	1	550
1544.20.40	20x2	PE-RT	50	1	550
1544.26.40	26x3	-	50	1	550
1544.32.40	32x3	-	25	1	325

Multi-layer pipe in polyethylene of greater thermal resistance (PE-RT).
Size: Outside Ø x pipe thickness

667



037

Universal unwinder for pipe coils, made of galvanised box-section steel.

Easy and quick to assemble.

The coil, once resting on the scrolling surface, is unwound easily thanks to the ball bearing.

Universal unwinder for pipes
Dérouleur universel pour tube
Универсальный разматыватель для трубы
Derulator universal pentru tub
Desenrollador universal para tubo
Universeller Abwickler für Rohr

Code	Pack	Carton
667.00.00	1	1

483



037

Corrugated sheath pipe protector.

Can also be used as a pipe protector at the manifold, and at the screed dilation joints (code 472.15.12).

Accessory that can be used on Kilma-Isi, Kilma-Graf, Kilma-Rete, Kilma-Industriale and Kilma-Futura radiant systems.

Corrugated sheath pipe protector
Gaine annelée pour la protection des tube
Защитная гофроболочка
Manta ondulată de protecție a tubului
Funda corrugada de protección del tubo
Wellmantel-Rohrschutz

Code	Size	Roll (m)	Pack	Carton
483.25.02*	Ø 25	50	1	1
483.32.02**	Ø 32	25	1	1

**Ø sheathed pipe 17x2*
***Ø sheathed pipe 20x2 - 25x2.3*

603



037

Bend former.

90 ° elbow, in polyamide F.V. used as a bend former as well as to protect the pipes close to their attachment to the manifold.

Accessory that can be used on Kilma-Isi, Kilma-Graf, Kilma-Rete, Kilma-Industriale and Kilma-Futura radiant systems.

Bend former
Coude de tube
Направляющие для крепления поворота трубы
Suporturi pentru elemente curbate
Soporte para tubo
Kurvenhalter

Code	Suitable for pipes	Pack	Carton
603.18.12	Ø 17	50	500
603.20.12	Ø 20	50	300
603.25.02	Ø 25	25	150

778



037

Vapour barrier.

Roll, sheet in PE with moisture barrier feature.

- Roll width: 1m
- PE sheet width: 2 m (folded in the middle)
- Roll length: 100 m

Vapour barrier
Barrière humidité
Барьер против влажности
Barieră împotriva umidității
Barrera humedad
Feuchtigkeitssperre

Code	Thickness (mm)	Pack	Pack m²	Carton
778.20.02	0,2	1	200	1

Accessory that can be used on Kilma-Isi, Kilma-Graf, Kilma-Rete, Kilma-Industriale and Kilma-Futura radiant systems.
Fitted with cross marking with 100 mm installation pitch.

472



Base edging joint.

Adhesive edging dilation joint, in polythene LPDE foam containing grout.

Accessory that can be used on Kilma-Isi, Kilma-Graf, Kilma-Rete and Kilma-Industriale radiant systems.
Adhesive on the full height of the joint.

Base edging joint
Joint périmiétrique de base
Периметральный шов основания
Îmbinare perimetrală pentru bază
Junta perimetral base
Randfuge Basis

Code	Height (mm)	Thickness (mm)	Roll (m)	Pack	Carton
472.15.12	150	8	60	1	5
475.25.12	250	8	60	60	180

037

472



Base edging joint.

Adhesive edging dilation joint, in polythene LPDE foam containing grout.

Accessory that can be used on the Kilma-Futura radiant system.

Base edging joint
Joint périmiétrique de base
Периметральный шов основания
Îmbinare perimetrală pentru bază
Junta perimetral base
Randfuge Basis

Code	Height (mm)	Thickness (mm)	Roll (m)	Pack	Carton
472.08.12	80	5	25	1	1

037

3670



Screed expansion joint with adhesive base.

- Joint height 100 mm
- Profile length 2 m

Screed expansion joint with adhesive base
Joint de dilatation de chape avec base adhésive
Расширительный шов стяжки с клейкой базой
Îmbinare de dilatare pentru fundație cu bază cu adeziv
Junta de dilatación de la solera con base con adhesivo
Dehnungsfuge Estrich mit selbstklebender Basis

Code	Length (m)	Pack	Carton
3670.10.02	2	90	90

Accessory to be used on Kilma-Graf, Kilma-Isi and Kilma-Rete radiant systems.

037

468



Pipe fastener clip.

Pipe anchor clip for KILMA panel
Made of plastic with anchoring lugs.

Accessory that can be used on Kilma-Isi and Kilma-Graf radiant systems.

Pipe fastener clip
Agrafe pour la fixation du tube
Скобка для крепления трубы
Clemă de fixare a tubului
Grapa para la fijación del tubo
Rohrbefestigungsschelle

Code	Size	Pack	Carton
468.45.12	45x20	1000	10000
468.45.00*	45x20	300	300
468.39.02**	39x20	1050	1050
19475702***	56x20	300	300

** Pack for fixing with special fastener clip tool code 469.00.02 - Clips joined together by heat-sealing*
*** Pack for fixing with special fastener clip tool code 469.00.02 – Low clip to be used with thin panels (up to 20mm thick). Suitable for fixing pipes maximum ø 17 mm - Pack for fixing with special fastener clip tool code 469.00.02 - Clips joined together by heat-sealing*
**** Pack for fixing with special fastener clip tool code 469.00.02 - Clips joined together by heat-sealing*

Strong pipe fastener clip
Agrafe pour la fixation du tube strong
Скобка для крепления трубы «strong»
Clemă de fixare a tubului puternică
Grapa para la fijación del tubo strong
Rohrbefestigungsschelle strong

Code	Size	Pack	Carton
2003.42.02*	42x20	1050	1050

** Pack for fixing with special fastener clip tool code 469.00.02 - Strong clip to be used with aluminised panels - Clips joined together with adhesive tape*

037

469



Fastener clip tool.

Easy to use tool for quick installation of the pipe fastener clip, code 468.45.00, 468.39.02, 1947.57.02 and 2003.42.02.

Fastener clip tool
Agrafeuse
Устройство для фиксирования скобок
Unealtă de fixare a clemelor
Herramienta para la fijación de grapas
Werkzeug Schellenbefestigung

Code	Pack	Carton
469.00.02	1	1

Accessory to be used on the Kilma-Graf radiant system.

037

476

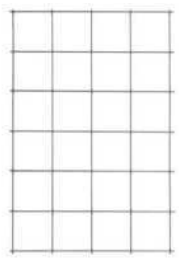

Electro-welded binding mesh Ø 2 mm for screed.

Galvanised electro-welded mesh panels for underfloor heating which drastically reduces the formation of cracks in concrete screed. Overlap of 75 mm with very little waste.

- Dimension 991x2060 mm
- Wire diameter 2 mm

Electro-welded binding mesh Ø 2 mm for screed
Treillis autocollant électro-soudé Ø 2 mm pour chape
Электросварная арматурная сетка Ø 2 мм для стяжки
Plasă de unire sudată electric Ø 2 mm pentru fundație
Red de unión electrosoldada Ø 2 mm para solera
Bindegitter elektroverschweißt Ø 2 mm für Estrich

Code	Mesh (mm)	Pack	Pack m²	Carton
476.40.02	75x75	1	40,80	20

Accessory that can be used on Kilma-Isi, Kilma-Graf and Kilma-Rete radiant systems.
Binding function for concrete screeds.
Supplied in bundles of 20 panels.

037

825



Mesh fastener clip.

Clip for fixing the mesh to the Kilma panel, made of plastic with anchoring lugs.

- Centre distance 75 mm
- Height 28 mm

Mesh fastener clip
Agrafe pour treillis
Скобка для крепления сетки
Clemă de fixare a plasei
Abrazadera de sujeción de la malla
Gitterbefestigungsschellen

Code	Centre distance (mm)	Height (mm)	Pack	Carton
825.00.02	75	28	100	4000

Accessory that can be used on the Kilma-Isi radiant system.

037

475



Kilma-Therm
Super fluidifying additive "KILMA-THERM".

Superfluidifying liquid additive for concrete screeds. Improves workability and performance characteristics. Gives the screed greater mechanical resistance and a higher thermal conductivity.

Super fluidifying liquid additive
Additif liquide super fluidifiant
Суперпластифицирующая жидкая добавка
Aditiv lichid super fluidifiant
Aditivo líquido superfluidificante
Flüssiges Additiv starkes Fließmittel

Code	Weight (kg)	Capacity (l)	Pack	Carton
475.10.02	10	9,80	1	60
475.25.02	25	24,5	1	24

Accessory that can be used on Kilma-Isi, Kilma-Graf, Kilma-Rete and Kilma-Industriale radiant systems.
Recommended dose: 1.0-1.2 Kg additive every 100 Kg of cement.

037

475



Polypropylene short fibre additive for concrete screeds.

Improves the elasticity and resistance of the screed, eliminating the risk of cracks as a result of plastic shrinkage in floors not properly wet cured. Non-flammable product.
Excellent resistance to acids, bases and chemical agents present in cement mixes.

Polypropylene short fibre additive for concrete screeds
Additif de fibre de propylène courte pour chapes en CLS
Добавка из короткого полипропиленового волокна для цементных стяжек
Aditiv din fibră polipropilenică scurtă pentru fundații din CLS
Aditivo de fibra de polipropileno corta para soleras de CLS
Additiv aus kurzer Polypropylenfaser aus CLS

Code	Weight (kg)	Pack	Carton
475.10.12	1	1	25

Accessory that can be used on Kilma-Isi, Kilma-Graf and Kilma-Rete radiant systems.
Dosage for mixes with average cement content: 0.9 kg/1 m^3 of screed.
To restore workability (concrete treated with fibre additive) combine with KILMA-THERM 0.5÷0.7 l/100kg cement.

037

862



Rail for fastening of the pipe.

Profile in plastic, sections of 1m in length which can be hooked together for a custom size.

Rail for fastening of the pipe
Rail pour la fixation du tuyau
Полоз для фиксирования трубы
Șină pentru fixarea tubului
Vía para la fijación del tubo
Schiene zur Rohrbefestigung

Code	Suitable for pipes	Pitch (mm)	Pack	Carton
862.16.00	ø 16 -17	50	80	80
862.16.10*	ø 16 -17	50	80	80
862.20.00	ø 17 - 20 - 25	100	50	50
862.20.10*	ø 17 - 20 - 25	100	50	50
862.24.42**	ø 20	50	63	63

** with fixing adhesive*
*** with fixing anchors*

Accessory that can be used on the Kilma-Industriale radiant system. Suitable for Kilma-flex polyethylene pipe and Tita-fix multi-layer pipe

037

476

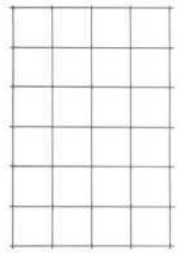

Electro-welded mesh Ø 3 mm for pipe anchoring.

Galvanised electro-welded mesh panels for underfloor heating.

- Dimension 1000x2000 mm
- Wire diameter 3 mm

Electro-welded mesh Ø 3 mm for pipe anchoring
Treillis électro-soudé Ø 3 mm pour l'ancrage du tuyau
Электросварная сетка Ø 3 мм для закрепления трубы
Plasă sudată electric Ø 3 mm pentru ancorarea tubului
Red electrosoldada Ø 3 mm para el anclaje del tubo
Elektrogeschweißtes Gitter Ø 3 mm zur Verankerung des Rohrs

Code	Mesh (mm)	Pack	Pack m²	Carton
476.10.02	100x100	1	40	18

Accessory that can be used on Kilma-Rete and Kilma-Industriale radiant systems.
Pipe fastener clip anchoring function.
Supplied in bundles of 15 panels.

037

595



Automatic pipe fastener clip for electro-welded mesh Ø 3 mm.

Plastic clip for anchoring the pipe to the electro-welded mesh (Code 476.10.02).
Wire diameter of 3 mm.
Fastening by clip fastener tool.

Automatic pipe fastener clip for electro-welded mesh Ø 3 mm
Clip tuyau automatique pour grille électro-soudée Ø 3 mm
Зажим автоматического крепления трубы для электросварной сетки Ø 3 мм
Clemă de fixare a tubului automată, pentru plasă sudată electric Ø 3 mm
Gancho para la fijación del tubo automático, para red electrosoldada Ø 3 mm
Automatischer Rohrhalterclip für elektrogeschweißtes Gitter Ø 3 mm

Code	Suitable for pipes	Pack	Carton
595.00.42	ø 17	1700	1700

Accessory that can be used on the Kilma-Rete radiant system.

037

595



Manual pipe fastener clip for electro-welded mesh Ø 3 mm.

Plastic clip for anchoring the pipe to the electro-welded mesh (Code 476.10.02).
Wire diameter of 3 mm.

Manual pipe fastener clip for electro-welded mesh Ø 3 mm
Clip tuyau manuel pour grille électro-soudée Ø 3 mm
Зажим ручного крепления трубы для электросварной сетки Ø 3 мм
Clemă de fixare a tubului manuală, pentru plasă sudată electric Ø 3 mm
Gancho para la fijación del tubo manual, para red electrosoldada Ø 3 mm
Manueller Rohrhalterclip für elektrogeschweißtes Gitter Ø 3 mm

Code	Suitable for pipes	Pack	Carton
595.00.00	ø 17 - 20	200	200

Accessory to be used on Kilma-Rete and Kilma-Industriale radiant systems.

037

595



Manual pipe fastener clip for electro-welded mesh Ø 6 mm.

Clip made of plastic for anchoring the pipe to the electro-welded mesh.
Wire diameter of 6 mm.

Accessory that can be used on the Kilma-Industriale radiant system.

Manual pipe fastener clip for electro-welded mesh Ø 6 mm
Clip tuyau manuel pour grille électro-soudée Ø 6 mm
Зажим ручного крепления трубы для электросварной сетки Ø 6 мм
Clemă de fixare a tubului manuală, pentru plasă sudată electric Ø 6 mm
Gancho para la fijación del tubo manual, para red electrosoldada Ø 6 mm
Manueller Rohrhalterclip für elektrogeschweißtes Gitter Ø 6 mm

Code	Suitable for pipes	Pack	Carton
595.00.22	ø 20	200	200
595.00.52	ø 25	100	100

037

470



Fixing clamp.

Clamp made of plastic for fastening the pipe to the electro-welded mesh (Cod.

Accessory that can be used on the Kilma-Industriale radiant system.

Fixing clamp
Collier de fixation
Крепежный хомутик
Bridă de fixare
Abrazadera de fijación
Befestigungsband

Code	Size A	Pack	Carton
470.00.02	x	1000	1000

037

2923



"KILMA-SILENT" roll panel.

The upper layer protrudes from the non-woven fabric by 5 cm, so as to create an overlap protecting the sheets lateral join line from cement-based mortar of the screed, as this would create an acoustic bridge.

Flexible acoustic insulator in roll for underfloor, consisting of an insulating layer coupled with sound resilient, non-woven polyester fibre fabric.

- Foot traffic attenuation level: DLw 26 dB.
- Roll overall dim: 10x1,05 m
- Roll usable dim: 10x1,00 m
- Thickness: 7.5 mm



Accessory that can be used on Kilma-Isi, Kilma-Graf and Kilma-Rete radiant systems.
Sound-absorbing panel.
Underfloor acoustic insulator. To be used together with Kilma panels.

"Kilma-SILENT" roll panel.
Panneau en rouleau « Kilma-SILENT »
Панель рулонная "Kilma-SILENT"
Panou în rolă „Kilma-SILENT"
Panel en rollo "Kilma-SILENT"
Platte Rolle „Kilma-SILENT"

Code	Net Dim. m	Insul. Th.mm	Pack	Pack m²	Carton
2923.07.02	10x1,00	7,5	1	10,50	1

035

2531



Sound absorbing L-shaped base edging joint.



Accessory that can be used on Kilma-Isi, Kilma-Graf and Kilma-Rete radiant systems.
Great sound absorbing properties.

Sound absorbing L-shaped base edging joint
Joint périmétrique base en « L » insonorisant
Периметральный шов основания L-образный, звукопоглащающий
Îmbinare perimetrală pentru bază sub formă de „L" fonoabsorbantă
Junta perimetral base en "L" insonorizante
Randfuge Basis mit „L" schallschluckend

Code	Dimensions (mm)	Length (m)	Pack	Carton
2531.16.02	160x50x6*	2	120	120

037

2532



Adhesive joint tape.

Adhesive joint tape which prevents the formation of acoustic bridges between 2 adjacent panels and creates a single insulating layer.

- Tape width 10 cm
- Tape length 25 m
- Thickness 3 mm

Adhesive joint tape
Ruban de jonction adhésif
Клейкая лента для соединительных швов
Bandă de joncțiune cu adeziv
Cinta de unión con adhesivo
Verbindungsklebeband

Code	Length (m)	Width (cm)	Pack	Carton
2532.10.02	25	10	1	1

Accessory that can be used on Kilma-Isi, Kilma-Graf and Kilma-Rete radiant systems.
Great sound absorbing properties.

037

2018

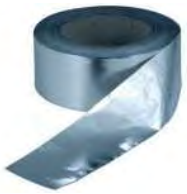

Anodised aluminium adhesive tape.

Aluminium adhesive tape to prevent the formation of acoustic bridges between 2 adjacent panels and to create a single insulating layer.

- Tape width 5 cm
- Tape length 50 m

Anodised aluminium adhesive tape
Ruban adhésif en aluminium anodisé
Клейкая лента из анодированного алюминия
Bandă adezivă din aluminiu anodizat
Cinta adhesiva de aluminio anodizado
Klebeband aus Aluminium eloxiert

Code	Length (m)	Width (cm)	Pack	Carton
2018.00.02	50	5	1	24

Accessory that can be used on Kilma-Graf, Kilma-Rete and Kilma-Futura radiant systems.
For use on the head joints of "Kilma-Roll" roll panels, "Kilma-Piano Aluminium" panels and "Kilma-Futura" system.

037

3702



KILMA FUTURA AD
Adhesive.

Gluing function of Kilma-Futura panels on existing substrate support.

Adhesive
Adhésif
Клей
Adeziv
Adhesivo
Klebeband

Code	Weight (kg)	Pack	Carton
3702.00.02	1	1	1

Accessory that can be used on the Kilma-Futura radiant system.
Average use 0.10 - 0.15 kg/m².

037

3055



PRIMER MF by MAPEI®
Epoxy primer.

Waterproofing and protection of the aluminised surface of the panel and piping in case of subsequent laying of flooring with cement-based glues or self-levelling screeds.

Supplied as a kit consisting of 1 3-kg box (primer) + 1 1-kg box (reagent).

Epoxy primer
Primaire époxy
Эпоксидная грунтовка
Primer hepoxidic
Imprimación expoxídica
Epoxidgrundierung

Code	Pack	Carton
3055.00.12	1	1

Accessory that can be used on the Kilma-Futura radiant system.
Average use 0.2 kg/m².

037

945



Straight fitting for quick connection to multi-layer pipe - straight sleeve.

Body in flame retardant plastic polymer
Elastomer seals
Max operating temperature 60 °C
Max. operating pressure 8 Bar

Straight fitting for quick connection to multi-layer pipe - straight sleeve
Raccord droit à enclenchement rapide pour tube multicouche - manchon droit
Прямой фитинг с быстроразъемным соединением для многослойной трубы - прямая муфта
Racord drept cu cuplaj rapid pentru tubul multistrat - manșon drept
Racor recto con acoplamiento rápido para tubo multicapa - manguito recto
Gerade Schnellsteckkupplung für Mehrschichtverbundrohr - gerade Muffe

Code	Size	Pack	Carton
945.20.00*	20x2	8	8
945.21.00**	20x2	8	8

**Blue*
***Red*
Size: Outside Ø x pipe thickness
Patent No. 262094

043

946

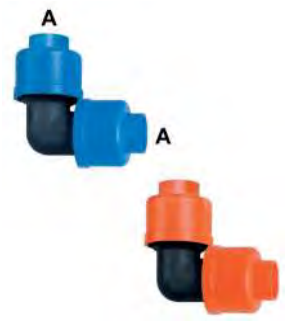

Angled fitting for quick connection to multi-layer pipe - elbow shaped sleeve.

Body in flame retardant plastic polymer
Elastomer seals
Max operating temperature 60 °C
Max. operating pressure 8 Bar

Angled fitting for quick connection to multi-layer pipe - elbow shaped sleeve
Raccord à angle à enclenchement rapide pour tube multicouche - Manchon coudé
Угловой фитинг с быстроразъемным соединением для многослойной трубы - угловая муфта
Racord cu colț cu cuplaj rapid pentru tubul multistrat - manșon cu cot
Racor en ángulo con acoplamiento rápido para tubo multicapa - manguito de codo
Winkel-Schnellsteckkupplung für Mehrschichtverbundrohr - Knie-Muffe

Code	Size	Pack	Carton
946.20.00*	20x2	8	8
946.21.00**	20x2	8	8

**Blue*
***Red*
Size: Outside Ø x pipe thickness
Patent No. 262094

043

947

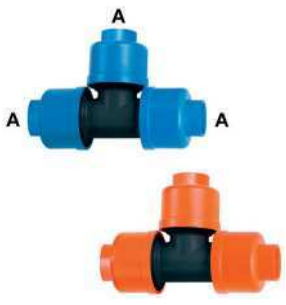

Quick coupling fitting for multilayer pipe - "T" sleeve.

Body in flame retardant plastic polymer
Elastomer seals
Max operating temperature 60 °C
Max. operating pressure 8 Bar

Quick coupling fitting for multilayer pipe - "T" sleeve
Raccord à enclenchement rapide pour tube multicouche - Manchon en « T »
Фитинг с быстроразъемным соединением для многослойной трубы - Т-образная муфта
Racord cu cuplaj rapid pentru tubul multistrat - manșon sub formă de „T"
Racor con acoplamiento rápido para tubo multicapa - manguito en "T"
Schnellsteckkupplung für Mehrschichtverbundrohr - „T"-Muffe

Code	Size	Pack	Carton
947.20.00*	20x2	5	5
947.21.00**	20x2	5	5

**Blue*
***Red*
Size: Outside Ø x pipe thickness
Patent No. 262094

043

944



Single sided coplanar manifold with quick coupling for multi-layer pipes and polyethylene pipes.

Body in flame retardant plastic polymer
Elastomer seals
Max operating temperature 60 °C
Max. operating pressure 8 Bar

Always use the RBM reinforcement bush for the pipe (see page 248) supplied as standard with the manifold

Single sided coplanar manifold with quick coupling for multi-layer pipes and polyethylene pipes
Collecteur coplanaire unilatéral à enclenchement rapide pour tube multicouche et tube en polyéthylène
Компланарный коллектор односторонний с быстроразъемным соединением для многослойной и полиэтиленовой трубы
Colector complanar monolateral cu cuplaj rapid pentru tubul multistrat și tubul din polietilenă
Colector coplanar monolateral con acoplamiento rápido para tubo multicapa y tubo de polietileno
Komplanarer einseitiger Sammelbehälter mit Schnellanschluss für Mehrschichtverbundrohr und Polyethylenrohr

Code	Size A	Size B	Pack	Carton
944.20.20	20x2	8x1	5	5

Size A: line connections - external diameter x pipe thickness
Size B: branch connections - external diameter x pipe thickness
Patent No. 262096

043

944

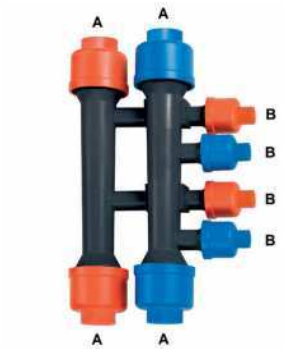

Single sided coplanar manifold with quick coupling for multi-layer pipes and polyethylene pipes.

Body in flame retardant plastic polymer
Elastomer seals
Max operating temperature 60 °C
Max. operating pressure 8 Bar

Always use the RBM reinforcement bush for the pipe (see page 248) supplied as standard with the manifold

Single sided coplanar manifold with quick coupling for multi-layer pipes and polyethylene pipes
Collecteur coplanaire unilatéral à enclenchement rapide pour tube multicouche et tube en polyéthylène
Компланарный коллектор односторонний с быстроразъемным соединением для многослойной и полиэтиленовой трубы
Colector complanar monolateral cu cuplaj rapid pentru tubul multistrat și tubul din polietilenă
Colector coplanar monolateral con acoplamiento rápido para tubo multicapa y tubo de polietileno
Komplanarer einseitiger Sammelbehälter mit Schnellanschluss für Mehrschichtverbundrohr und Polyethylenrohr

Code	Size A	Size B	Pack	Carton
944.20.40	20x2	8x1 (2+2)	4	4

Size A: line connections - external diameter x pipe thickness
Size B: branch connections - external diameter x pipe thickness
Patent No. 262096

043

940



Double sided coplanar manifold with quick coupling for multi-layer pipes and polyethylene pipes.

Body in flame retardant plastic polymer
Elastomer seals
Max operating temperature 60 °C
Max. operating pressure 8 Bar

Always use the RBM reinforcement bush for the pipe (see page 248) supplied as standard with the manifold

Double sided dual manifold with quick coupling for polyethylene pipes and multi-layer polyethylene pipes
Collecteur coplanaire bilatéral à enclenchement rapide pour tube en polyéthylène multicouche et tube en polyéthylène
Компланарный коллектор двусторонний с быстроразъемным соединением для многослойной полиэтиленовой трубы и полиэтиленовой трубы
Colector complanar bilateral cu cuplaj rapid pentru tubul din polietilenă multistrat și tubul din polietilenă
Colector coplanar bilateral con acoplamiento rápido para tubo de polietileno multicapa y tubo de polietileno
Komplanarer zweiseitiger Sammelbehälter mit Schnellanschluss für Polyethylen-Mehrschichtverbundrohr und Polyethylenrohr

Code	Size A	Size B	Pack	Carton
940.20.40	20x2	8x1 (4+4)	3	3

Size A: line connections - external diameter x pipe thickness
Size B: branch connections - external diameter x pipe thickness
Patent No. 262096

043

937



End of line plug. To be used on the unused ports in quick coupling manifolds.

Body in flame retardant plastic polymer
Max operating temperature 60 °C
Max. operating pressure 8 Bar

End of line plug
Bouchon de fin de ligne
Заглушка в конце линии
Capac de capăt de linie
Tapón de final de línea
Stopfen Leitungsende

Code	Size	Pack	Carton
937.08.00	8	10	10
937.20.00	20	10	10

Size A: Ø external

043

945



Repair kit / circuits junction.

Material needed to repair an inadvertently damaged circuit.

One pack includes No. 1 quick coupling sleeve fitting with reinforced core suitable for the joining of two pipe ends section Ø 8x1.

Repair fitting / circuits junction
Raccord de réparation / jonction des circuits
Фитинг для ремонта / подсоединения контуров
Racord de reparație/joncțiune a circuitelor
Racor de reparación / unión circuitos
Reparatur-Verbindungsstück/Dichtung Kreise

Code	Size	Pack	Carton
945.08.00*	8x1	10	10
945.08.10**	8x1	10	10

**Blue*
***Red*

043

936



Reinforced sleeve for polyethylene pipe.

To be plugged into pipe end, upon quick coupling into fitting.

Reinforced sleeve for polyethylene pipe
Douille de renfort pour tube en polyéthylène
Усилительная втулка для полиэтиленовой трубы
Bucşă de ranforsare pentru tubul din polietilenă
Casquillo de refuerzo para tubo de polietileno
Verstärkungshülse für Polyethylenrohr

Code	Size	Pack	Carton
936.08.00*	8x1	20	20
936.08.10**	8x1	20	20

** Supplied as standard in quick coupling manifolds*
*** To use only with Kilma Board 15 panel*
Size: outside ø x pipe thickness

043

782



KILMA-EVO-RM-AT
Climate mixing unit Kilma-EVO-RM AT series.

Mixing and distribution unit for low and high temperature circuits, comprised of: H.T. manifold, circulation pump, manifold recirculation by-pass and mixing unit in-one; modulating adjustment using injection unit with servomotor, electronic climatic control unit, safety thermostat, external probe, immersed internal probe (low temperature delivery).

- System side connection centre distance 90 mm, G 3/4" ball valve connections.
- Centre distance of connections on the diverter line of the high temperature manifold 45 mm, Euroconus G 3/4" threaded connections

Mixing unit
Groupe de mélange
Смесительный узел
Grup de amestecare
Grupo de mezcla
Mischeinheit

Code	Pump	Pack	Carton
782.06.51	Para 15/7 SC 130	1	1

high performance adjustable flow pump EEI<0.23 - ERP 622/2012

Use Euroconus fittings with G 3/4" thread (see page 286) to connect the pipe to the H.T. manifold.
For matching manifolds, refer to the Manifold kit section of this catalogue (see page 271). Provide for assemblies without ball shut-off valves.
Minimum recessed depth of the accessory containment metal case 130 mm.

036

782



KILMA-EVO-RF-AT
Fixed Point mixing unit Kilma-EVO-RF AT series.

Mixing and distribution unit for low and high temperature circuits, comprised of: H.T. manifold, circulation pump, manifold recirculation by-pass and mixing unit in-one; fixed value adjustment, using injection valve with thermostatic head with internal probe (low temperature delivery), immersed safety thermostat.

- System side connection centre distance 90 mm, G 3/4" ball valve connections.
- Centre distance of connections on the diverter line of the high temperature manifold 45 mm, Euroconus G 3/4" threaded connections

Mixing unit
Groupe de mélange
Смесительный узел
Grup de amestecare
Grupo de mezcla
Mischeinheit

Code	Pump	Pack	Carton
782.06.61	Para 15/7 SC 130	1	1

high performance adjustable flow pump EEI<0.23 - ERP 622/2012

Use Euroconus fittings with G 3/4" thread (see page 286) to connect the pipe to the H.T. manifold.
For matching manifolds, refer to the Manifold kit section of this catalogue (see page 271). Provide for assemblies without ball shut-off valves.
Minimum recessed depth of the accessory containment metal case 130 mm.

036

701



KILMA-ECO-RF-AT
Fixed Point mixing unit Kilma-ECONBLOCK RF-AT series.

Mixing and distribution unit for low and high temperature circuits, comprised of: H.T. manifold, circulation pump, mixing manifold, including non-return valve and control return unit; fixed value adjustment using injection valve with thermostatic head with internal probe (low temperature delivery), immersed safety thermostat.

- System side connection centre distance 90 mm, G 3/4" ball valve connections.
- Centre distance of connections on the diverter line of the high temperature manifold 45 mm, Euroconus G 3/4" threaded connections

Mixing unit
Groupe de mélange
Смесительный узел
Grup de amestecare
Grupo de mezcla
Mischeinheit

Code	Pump	Pack	Carton
701.06.61	Para 15/7 SC 130	1	1

high performance adjustable flow pump EEI<0.23 - ERP 622/2012

Use Euroconus fittings with G 3/4" thread (see page 286) to connect the pipe to the H.T. manifold.
For matching manifolds, refer to the Manifold kit section of this catalogue (see page 271). Provide for assemblies without ball shut-off valves.
Minimum recessed depth of the accessory containment metal case 130 mm.

036

1531



KILMA-ECO-RF-AT Polymer
Fixed Point mixing unit Kilma-ECONBLOCK RF-AT series in Polymer.

Mixing and distribution unit for low and high temperature circuits, comprised of: H.T. manifold, circulation pump, mixing manifold, including non-return valve and control return unit; fixed value adjustment using injection valve with thermostatic head with internal probe (low temperature delivery), immersed safety thermostat.

- System side connection centre distance 111 mm, G 3/4" ball valve connections.
- Centre distance between outlet connections for high temperature 37 mm, Standard threaded RBM connections

Mixing unit
Groupe de mélange
Смесительный узел
Grup de amestecare
Grupo de mezcla
Mischeinheit

Code	Pump	Pack	Carton
1531.06.71	Para 15/7 SC 130	1	1

high performance adjustable flow pump EEI<0.23 - ERP 622/2012

Warning: branch pipe fittings tightened to max torque of 30Nm.

Use fittings with Standard RBM thread (see pg. 274) to connect the pipe to the H.T. manifold.
For matching manifolds, refer to the Manifold kit section of this catalogue (see page 271). Provide for assemblies without ball shut-off valves.
Minimum recessed depth of the accessory containment metal case 130 mm.

036

9241



Metal containment box for Kilma control unit.

Metal case for Kilma control units
Boîte métallique contenant les unités de contrôle Kilma
Металлическая коробка для содержимого установки Kilma
Casetă metalică pentru unitățile de control Kilma
Caja de metal contenedora de centralitas Kilma
Metallkasten zur Aufnahme Steuergeräte Kilma

Code	Useful Dim. (mm)	Pack	Carton
924.10.05	800x110÷160x700÷820	1	1
924.20.05	1000x110÷160x700÷820	1	1
924.30.05	1200x110÷160x700÷820	1	1

027

MATCHING CHART LOW AND HIGH TEMPERATURE MIXING UNITS / HOUSING BOXES

MIXING UNITS WITH AIR VENTS

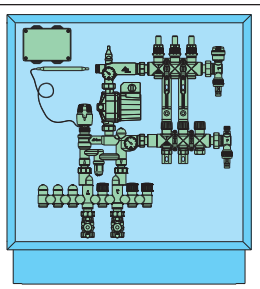

NUMBER OF WAYS OF LOW TEMPERATURE MANIFOLDS											
2	3	4	5	6	7	8	9	10	11	12	13
BOX L=800 Code. **9241.005**				BOX L=1000 Code. **9242.005**				BOX L=1200 Code. **9243.005**			

MIXING UNITS WITH BY-PASS

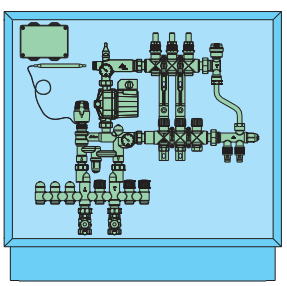

NUMBER OF WAYS OF LOW TEMPERATURE MANIFOLDS											
2	3	4	5	6	7	8	9	10	11	12	13
BOX L=800 Code. **9241.005**				BOX L=1000 Code. **9242.005**				BOX L=1200 Code. **9243.005**			BOX NOT AVAILABLE

770



KILMA-EVO-RM

Climate mixing unit Kilma-EVO-RM series.

Mixing and distribution unit for low temperature circuits, comprised of: circulation pump, manifold recirculation by-pass, boiler recirculation by-pass and mixing unit in-one; modulating adjustment using injection unit with servomotor, electronic climatic control unit, safety thermostat, external probe, immersed internal probe (low temperature delivery).

- System side connection centre distance 111 mm, G 3/4" ball valve connections and thermostatic mixer.

Mixing unit
Groupe de mélange
Смесительный узел
Grup de amestecare
Grupo de mezcla
Mischeinheit

Code	Pump	Pack	Carton
770.06.51	Para 15/7 SC 130	1	1

high performance adjustable flow pump EEI<0.23 - ERP 622/2012

For matching manifolds, refer to the Manifold kit section of this catalogue (see page 271). Provide for assemblies without ball shut-off valves.
Minimum recessed depth of the accessory containment metal case 130 mm.

036

770



KILMA-EVO-RF

Fixed Point mixing unit Kilma-EVO-RF series.

Mixing and distribution unit for low temperature circuits, comprised of: circulation pump, manifold recirculation by-pass, boiler recirculation by-pass and mixing unit in-one; fixed value adjustment using injection valve with thermostatic head with internal probe (low temperature delivery) immersed safety thermostat.

- System side connection centre distance 111 mm, G 3/4" ball valve connections and thermostatic mixer.

Mixing unit
Groupe de mélange
Смесительный узел
Grup de amestecare
Grupo de mezcla
Mischeinheit

Code	Pump	Pack	Carton
770.06.61	Para 15/7 SC 130	1	1

high performance adjustable flow pump EEI<0.23 - ERP 622/2012

For matching manifolds, refer to the Manifold kit section of this catalogue (see page 271). Provide for assemblies without ball shut-off valves.
Minimum recessed depth of the accessory containment metal case 130 mm.

036

701



KILMA-ECO-RF

Fixed Point mixing unit Kilma-ECONBLOCK RF series.

Mixing and distribution unit for low temperature circuits, comprised of: circulation pump, mixing manifold, including non-return valve and control return unit; fixed value adjustment using injection valve with thermostatic head with internal probe (low temperature delivery), immersed safety thermostat.

- System side connection centre distance 111 mm, G 1/2" F connections.

Mixing unit
Groupe de mélange
Смесительный узел
Grup de amestecare
Grupo de mezcla
Mischeinheit

Code	Pump	Pack	Carton
701.06.51	Para 15/7 SC 130	1	1

high performance adjustable flow pump EEI<0.23 - ERP 622/2012

For matching manifolds, refer to the Manifold kit section of this catalogue (see page 271). Provide for assemblies without ball shut-off valves.
Minimum recessed depth of the accessory containment metal case 130 mm.

036

1531



KILMA-ECO-RF Polymer
Fixed Point mixing unit Kilma-ECONBLOCK RF series in Polymer.

Mixing and distribution unit for low temperature circuits, comprised of: circulation pump, mixing manifold, including non-return valve and control return unit; fixed value adjustment using injection valve with thermostatic head with internal probe (low temperature delivery), immersed safety thermostat.

- System side connection centre distance 111 mm, G 1/2" M connections.

Mixing unit
Groupe de mélange
Смесительный узел
Grup de amestecare
Grupo de mezcla
Mischeinheit

Code	Pump	Pack	Carton
1531.06.51	Para 15/7 SC 130	1	1

high performance adjustable flow pump EEI<0.23 - ERP 622/2012

For matching manifolds, refer to the Manifold kit section of this catalogue (see page 271). Provide for assemblies without ball shut-off valves.
Minimum recessed depth of the accessory containment metal case 130 mm.

036

3523



Kilma-ECOMIX RF series Fixed Point mixing unit.

Mixing and distribution unit for low temperature circuits consisting of: circulation pump and thermostatic mixer.

- G 1" M system side connections.

For matching manifolds, refer to the Manifold kit section of this catalogue (see page 271). Provide for assemblies without ball shut-off valves.
Minimum recessed depth of the accessory containment metal case 130 mm.

ECOMIX RF 50 mixing unit
Groupe de mélange ECOMIX RF 50
Смесительный узел установки ECOMIX RF 50
Grup de amestecare ECOMIX RF 50
Grupo de mezcla ECOMIX RF 50
Mischeinheit ECOMIX RF 50

Code	Pump	Pack	Carton
3523.06.51	Para 15/7 SC 130	1	1

high performance adjustable flow pump EEI<0.23 - ERP 622/2012
To be matched to manifolds with a 50 mm centre distance (see page 271)

036

9241



Metal containment box for Kilma control unit.

Metal case for Kilma control units
Boîte métallique contenant les unités de contrôle Kilma
Металлическая коробка для содержимого установки Kilma
Casetă metalică pentru unităţile de control Kilma
Caja de metal contenedora de centralitas Kilma
Metallkasten zur Aufnahme Steuergeräte Kilma

Code	Useful Dim. (mm)	Pack	Carton
924.10.05	800x110÷160x700÷820	1	1
924.20.05	1000x110÷160x700÷820	1	1
924.30.05	1200x110÷160x700÷820	1	1

027

MATCHING CHART LOW TEMPERATURE MIXING UNITS / HOUSING BOXES

MIXING UNITS WITH AIR VENTS

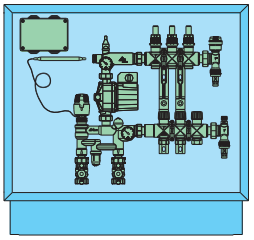

NUMBER OF WAYS OF LOW TEMPERATURE MANIFOLDS											
2	3	4	5	6	7	8	9	10	11	12	13
BOX L=800 Code. **9241.005**				BOX L=1000 Code.**9242.005**				BOX L=1200 Code. **9243.005**			

MIXING UNITS WITH BY-PASS

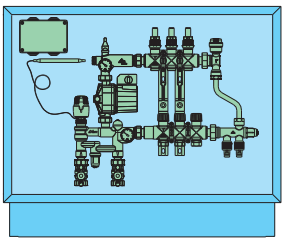

NUMBER OF WAYS OF LOW TEMPERATURE MANIFOLDS											
2	3	4	5	6	7	8	9	10	11	12	13
BOX L=800 Code. **9241.005**				BOX L=1000 Code. **9242.005**				BOX L=1200 Code. **9243.005**			BOX NOT AVAILABLE

782



Kilma EVO-RM2

Code	Size	Ways	Width (mm)	Height (mm)	Pack	Carton
782.06.80	1″	3+3	800	700÷820	1	1
783.06.80	1″	4+4	800	700÷820	1	1
784.06.80	1″	5+5	800	700÷820	1	1
785.06.80	1″	6+6	800	700÷820	1	1
786.06.80	1″	7+7	1000	700÷820	1	1
787.06.80	1″	8+8	1000	700÷820	1	1
788.06.80	1″	9+9	1000	700÷820	1	1
789.06.80	1″	10+10	1000	700÷820	1	1
790.06.80	1″	11+11	1200	700÷820	1	1
790.12.80	1″	12+12	1200	700÷820	1	1
790.13.80	1″	13+13	1200	700÷820	1	1

high performance adjustable flow pump EEI<0.23 - ERP 622/2012
Available version is equipped with 3-way H.T. distribution manifold with thermostatically controlled valves and lockshield regulating valves. Ordering code becomes 1xxx.xx.xx (request price).
Box depth 110÷160 mm

KILMA-EVO-RM2
Climate Control Unit Kilma-Evo-RM2 series

Distribution unit for low and high temperature circuits consisting of: specific manifolds, circulation pump and mixing unit integrated together: modulating adjustment by means of injection unit with actuator, electronic climate mixing unit, safety thermostat, external probe, internal probe (low temperature delivery) with well, all housed in a recessed metal case with locking hatch; Including: supply control flow meters, thermostatically controlled valves on the return line, 1 automatic air vent valve/degasser, equipped with connection for system filling, 1 air manual discharge unit, system loading 2 shut-off ball valves, thermometers for reading delivery and return temperatures.

036

- Centre distance between attachments on the plant side 90 mm.
- Centre distance of connections on the diverter line of the high temperature manifold 45 mm, Euroconus G 3/4″ threaded connections
- Centre distance of connections on the diverter line of the low temperature manifold 50 mm, Euroconus G 3/4″ threaded connections

The case size enables installation of the Bypass unit code 910.06.00
Use Euroconus fittings with G 3/4″ thread (see page 286) to connect the pipe to the H.T. manifold.
Use Euroconus fittings with G 3/4″ thread (see page 286) to connect the pipe to the L.T. manifold.

782

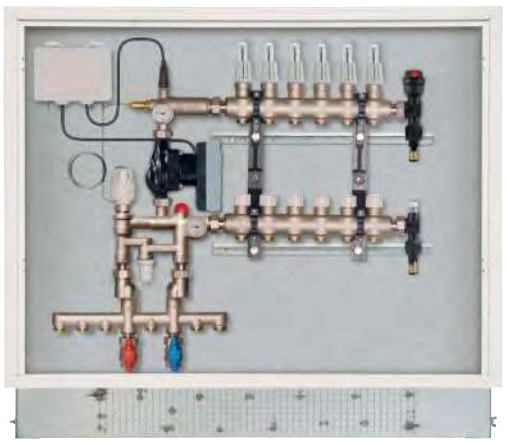

Kilma EVO-RF2

Code	Size	Ways	Width (mm)	Height (mm)	Pack	Carton
782.06.90	1″	3+3	800	700÷820	1	1
783.06.90	1″	4+4	800	700÷820	1	1
784.06.90	1″	5+5	800	700÷820	1	1
785.06.90	1″	6+6	800	700÷820	1	1
786.06.90	1″	7+7	1000	700÷820	1	1
787.06.90	1″	8+8	1000	700÷820	1	1
788.06.90	1″	9+9	1000	700÷820	1	1
789.06.90	1″	10+10	1000	700÷820	1	1
790.06.90	1″	11+11	1200	700÷820	1	1
790.12.90	1″	12+12	1200	700÷820	1	1
790.13.90	1″	13+13	1200	700÷820	1	1

high performance adjustable flow pump EEI<0.23 - ERP 622/2012
Available version is equipped with 3-way H.T. distribution manifold with thermostatically controlled valves and lockshield regulating valves. Ordering code becomes 1xxx.xx.xx (request price).
Box depth 110÷160 mm

KILMA-EVO-RF2
Fixed Point Control Unit Kilma-Evo-RF2 series

Control unit for low and high temperature circuits consisting of: Specific manifolds, circulation pump and injection unit integrated together; fixed value adjustment, by means of injection valve with thermostatic head, internal probe (low temperature delivery), safety thermostat with well, all housed in a recessed metal case with locking hatch; Including: supply control flow meters, thermostatically controlled valves on the return line, 1 automatic air vent valve /degasser, equipped with connections for system filling, 1 air manual discharge unit, system loading, 2 shut-off ball valves, thermometers for reading delivery and return temperatures.

036

- Centre distance between attachments on the plant side 90 mm.
- Centre distance of connections on the diverter line of the high temperature manifold 45 mm, Euroconus G 3/4″ threaded connections
- Centre distance of connections on the diverter line of the low temperature manifold 50 mm, Euroconus G 3/4″ threaded connections

The case size enables installation of the Bypass unit code 910.06.00
Use Euroconus fittings with G 3/4″ thread (see page 286) to connect the pipe to the H.T. manifold.
Use Euroconus fittings with G 3/4″ thread (see page 286) to connect the pipe to the L.T. manifold.

770

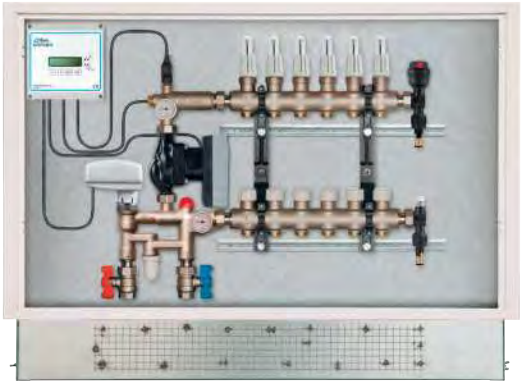

Kilma EVO-RM4

Code	Size	Ways	Width (mm)	Height (mm)	Pack	Carton
770.06.80	1"	3+3	800	700÷820	1	1
771.06.80	1"	4+4	800	700÷820	1	1
772.06.80	1"	5+5	800	700÷820	1	1
773.06.80	1"	6+6	800	700÷820	1	1
774.06.80	1"	7+7	1000	700÷820	1	1
775.06.80	1"	8+8	1000	700÷820	1	1
776.06.80	1"	9+9	1000	700÷820	1	1
777.06.80	1"	10+10	1000	700÷820	1	1
778.06.80	1"	11+11	1200	700÷820	1	1
778.12.80	1"	12+12	1200	700÷820	1	1
778.13.80	1"	13+13	1200	700÷820	1	1

high performance adjustable flow pump EEI<0.23 - ERP 622/2012
Box depth 110÷160 mm

KILMA-EVO-RM4
Climate Control Unit Kilma-Evo-RM4 series

Control distribution unit for low temperature circuits consisting of: specific manifolds, circulation pump, boiler recirculating by-pass and mixing unit integrated together: modulating regulation by means of injection unit with actuator, electronic climate control unit, safety thermostat, external probe, internal probe (low temperature delivery) with well, all housed in a recessed metal case with locking hatch; Including: supply control flow meters, thermostatically controlled valves on the return line, 1 automatic air vent valve/degasser, equipped with connection for system filling, 1 air manual discharge unit, system loading, 2 shut-off ball valves, thermometers for reading delivery and return temperatures.

036

- Centre distance between attachments on the plant side 111 mm.
- Centre distance of connections on the diverter line of the low temperature manifold 50 mm, Euroconus G 3/4" threaded connections

The case size enables installation of the Bypass unit code 910.06.00
Use Euroconus fittings with G 3/4" thread (see page 286) to connect the pipe to the L.T. manifold.

770

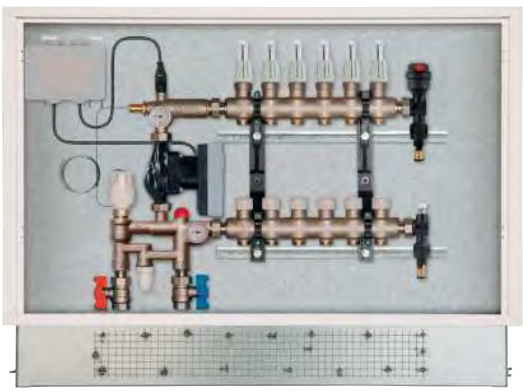

Kilma EVO-RF4

Code	Size	Ways	Width (mm)	Height (mm)	Pack	Carton
770.06.90	1"	3+3	800	700÷820	1	1
771.06.90	1"	4+4	800	700÷820	1	1
772.06.90	1"	5+5	800	700÷820	1	1
773.06.90	1"	6+6	800	700÷820	1	1
774.06.90	1"	7+7	1000	700÷820	1	1
775.06.90	1"	8+8	1000	700÷820	1	1
776.06.90	1"	9+9	1000	700÷820	1	1
777.06.90	1"	10+10	1000	700÷820	1	1
778.06.90	1"	11+11	1200	700÷820	1	1
778.12.90	1"	12+12	1200	700÷820	1	1
778.13.90	1"	13+13	1200	700÷820	1	1

high performance adjustable flow pump EEI<0.23 - ERP 622/2012
Box depth 110÷160 mm

KILMA-EVO-RF4
Fixed Point Control Unit Kilma-Evo-RF4 series

Control unit for low temperature circuits consisting of: Specific manifolds, circulation pump and injection unit integrated together; fixed value adjustment, by means of injection valve with thermostatic head, internal probe (low temperature delivery), safety thermostat with well, all housed in a recessed metal case with locking hatch; Including: supply control flow meters, thermostatically controlled valves on the return line, 1 automatic air vent valve /degasser, equipped with connections for system filling, 1 air manual discharge unit, system loading, 2 shut-off ball valves, thermometers for reading delivery and return temperatures.

036

- Centre distance between attachments on the plant side 111 mm.
- Centre distance of connections on the diverter line of the low temperature manifold 50 mm, Euroconus G 3/4" threaded connections

The case size enables installation of the Bypass unit code 910.06.00
Use Euroconus fittings with G 3/4" thread (see page 286) to connect the pipe to the L.T. manifold.

701

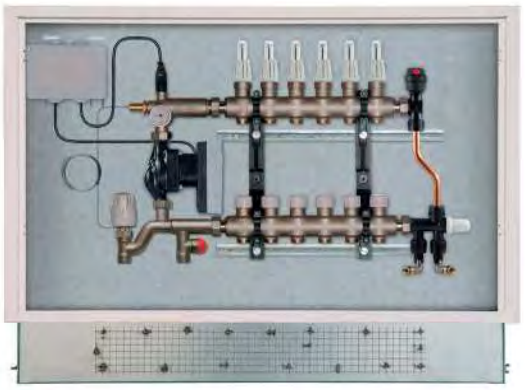

Kilma ECONBLOCK RF

Code	Size	Ways	Width (mm)	Height (mm)	Pack	Carton
701.06.50	1"	3+3	800	700÷820	1	1
702.06.50	1"	4+4	800	700÷820	1	1
703.06.50	1"	5+5	800	700÷820	1	1
704.06.50	1"	6+6	800	700÷820	1	1
705.06.50	1"	7+7	1000	700÷820	1	1
706.06.50	1"	8+8	1000	700÷820	1	1
707.06.50	1"	9+9	1000	700÷820	1	1
708.06.50	1"	10+10	1000	700÷820	1	1
709.06.50	1"	11+11	1200	700÷820	1	1
709.12.50	1"	12+12	1200	700÷820	1	1

high performance adjustable flow pump EEI<0.23 - ERP 622/2012
Box depth 110÷160 mm

KILMA-ECONBLOCK RF
Fixed Point control unit Kilma-ECONBLOCK RF series

Distribution control unit for low temperature circuits consisting of: specific manifolds, circulation pump, mixing manifold, including non-return valve and control return unit; fixed point control through injection valve with thermostatic head internal probe (low temperature flow), immersion safety thermostat, all housed in a built-in metal case with locking hatch. Including: flow control meters, flow thermometer, valves with thermostatic option on return, 1 automatic air vent valve / air separator valve, adjustable by-pass valve equipped with connections for system filling.
Model recommended for use with electrothermic heads.

- Centre distance between attachments on the plant side 111 mm.
- Centre distance of connections on the diverter line of the low temperature manifold 50 mm, Euroconus G 3/4" threaded connections

Use Euroconus fittings with G 3/4" thread (see page 286) to connect the pipe to the L.T. manifold.

036

701



Kilma ECONBLOCK RF-AT

Code	Size	Ways	Width (mm)	Height (mm)	Pack	Carton
701.06.60	1"	3+3	800	700÷820	1	1
702.06.60	1"	4+4	800	700÷820	1	1
703.06.60	1"	5+5	800	700÷820	1	1
704.06.60	1"	6+6	800	700÷820	1	1
705.06.60	1"	7+7	1000	700÷820	1	1
706.06.60	1"	8+8	1000	700÷820	1	1
707.06.60	1"	9+9	1000	700÷820	1	1
708.06.60	1"	10+10	1000	700÷820	1	1
709.06.60	1"	11+11	1200	700÷820	1	1
709.12.60	1"	12+12	1200	700÷820	1	1

high performance adjustable flow pump EEI<0.23 - ERP 622/2012
Available version is equipped with 3-way H.T. distribution manifold with thermostatically controlled valves and lockshield regulating valves. Ordering code becomes 1xxx.xx.xx (request price).
Box depth 110÷160 mm

KILMA-ECONBLOCK RF-AT
Fixed Point control unit Kilma-ECONBLOCK RF-AT series

Distribution control unit for low and high temperature circuits consisting of: specific manifolds, circulation pump, mixing manifold, including non-return valve and control return unit; fixed point control through injection valve with thermostatic head internal probe (low temperature flow), immersion safety thermostat, all housed in a built-in metal case with locking hatch. Including: supply control flow meters, delivery thermometer, valves with thermostatic option on return,, 1 automatic air vent valve / air separator valve, adjustable by-pass unit equipped with connections for system filling, 2 shut-off ball valves.
Model recommended for use with electrothermic heads.

- Centre distance between attachments on the plant side 90 mm.
- Centre distance of connections on the diverter line of the high temperature manifold 45 mm, Euroconus G 3/4" threaded connections
- Centre distance of connections on the diverter line of the low temperature manifold 50 mm, Euroconus G 3/4" threaded connections

Use Euroconus fittings with G 3/4" thread (see page 286) to connect the pipe to the H.T. manifold.
Use Euroconus fittings with G 3/4" thread (see page 286) to connect the pipe to the L.T. manifold.

036

1531



Kilma ECONBLOCK RF polymer

Code	Size	Ways	Width (mm)	Height (mm)	Pack	Carton
1531.06.50	1"	3+3	800	700÷820	1	1
1532.06.50	1"	4+4	800	700÷820	1	1
1533.06.50	1"	5+5	800	700÷820	1	1
1534.06.50	1"	6+6	800	700÷820	1	1
1535.06.50	1"	7+7	1000	700÷820	1	1
1536.06.50	1"	8+8	1000	700÷820	1	1
1537.06.50	1"	9+9	1000	700÷820	1	1
1538.06.50	1"	10+10	1000	700÷820	1	1
1539.06.50	1"	11+11	1200	700÷820	1	1
1540.06.50	1"	12+12	1200	700÷820	1	1

high performance adjustable flow pump EEI<0.23 - ERP 622/2012
Box depth 120÷160 mm

KILMA-ECONBLOCK RF Polymer
Fixed Point control unit Kilma-ECONBLOCK RF series in Polymer

Distribution control unit for low temperature circuits consisting of: specific manifolds, circulation pump, mixing manifold, including non-return valve and control return unit; fixed point control through injection valve with thermostatic head internal probe (low temperature flow), immersion safety thermostat, all housed in a built-in metal case with locking hatch. Including: flow control meters, flow thermometer, valves with thermostatic option on return, 1 automatic air vent valve / air separator valve, adjustable by-pass valve equipped with connections for system filling.
Model recommended for use with electrothermic heads.

036

- Centre distance between attachments on the plant side 111 mm.
- Centre distance of connections on the diverter line of the low temperature manifold 50 mm, Euroconus G 3/4" threaded connections

Use Euroconus fittings with G 3/4" thread (see page 286) to connect the pipe to the L.T. manifold.

Warning: branch pipe fittings tightened to max torque of 30Nm.

1531

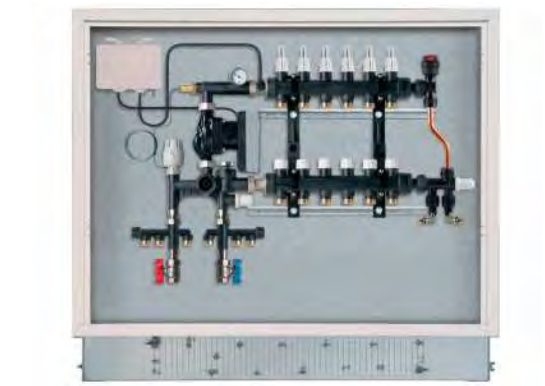

Kilma ECONBLOCK RF-AT polymer

Code	Size	Ways	Width (mm)	Height (mm)	Pack	Carton
1531.06.70	1"	3+3	800	700÷820	1	1
1532.06.70	1"	4+4	800	700÷820	1	1
1533.06.70	1"	5+5	800	700÷820	1	1
1534.06.70	1"	6+6	800	700÷820	1	1
1535.06.70	1"	7+7	1000	700÷820	1	1
1536.06.70	1"	8+8	1000	700÷820	1	1
1537.06.70	1"	9+9	1000	700÷820	1	1
1538.06.70	1"	10+10	1000	700÷820	1	1
1539.06.70	1"	11+11	1200	700÷820	1	1
1540.06.70	1"	12+12	1200	700÷820	1	1

high performance adjustable flow pump EEI<0.23 - ERP 622/2012
Box depth 130÷160 mm

KILMA-ECONBLOCK RF-AT Polymer
Fixed Point control unit Kilma-ECONBLOCK RF-AT series in Polymer

Distribution control unit for low and high temperature circuits consisting of: specific manifolds, circulation pump, mixing manifold, including non-return valve and control return unit; fixed point control through injection valve with thermostatic head internal probe (low temperature flow), immersion safety thermostat, all housed in a built-in metal case with locking hatch. Including: supply control flow meters, delivery thermometer, thermostatic valves on return, 1 automatic air vent valve / air separator valve, adjustable by-pass unit equipped with connections for system filling, 2 shut-off ball valves.
Model recommended for use with electrothermic heads.

036

- Centre distance between attachments on the plant side 111 mm.
- Centre distance between outlet connections for high temperature 37 mm, Standard threaded RBM connections
- Centre distance of connections on the diverter line of the low temperature manifold 50 mm, Euroconus G 3/4" threaded connections

Use fittings with Standard RBM thread (see pg. 181) to connect the pipe to the H.T. manifold.
Use Euroconus fittings with G 3/4" thread (see page 286) to connect the pipe to the L.T. manifold.

Warning: branch pipe fittings tightened to max torque of 30Nm.

3524



Kilma ECOMIX-RF

Code	Size	Ways	Width (mm)	Height (mm)	Pack	Carton
3524.06.90	1″	3+3	800	700÷820	1	1
3525.06.90	1″	4+4	800	700÷820	1	1
3526.06.90	1″	5+5	800	700÷820	1	1
3527.06.90	1″	6+6	800	700÷820	1	1
3528.06.90	1″	7+7	1000	700÷820	1	1
3529.06.90	1″	8+8	1000	700÷820	1	1
3530.06.90	1″	9+9	1000	700÷820	1	1
3531.06.90	1″	10+10	1000	700÷820	1	1
3532.06.90	1″	11+11	1200	700÷820	1	1
3533.06.90	1″	12+12	1200	700÷820	1	1

high performance adjustable flow pump EEI<0.23 - ERP 622/2012
Box depth 130÷160 mm

KILMA-ECOMIX-RF

Kilma-ECOMIX RF series Fixed Point control unit

Distribution unit for low temperature circuits consisting of: specific manifolds, circulation pump, thermostatic mixer, all placed in a metal case with door designed for recessed installation. Includes: delivery control flowmeters, valves with thermostatic option on return, 1 automatic air vent/ degasser valve fitted with a connection to fill the system and 1 air discharge manual unit.

- G 1″ system side connections
- Centre distance of connections on the diverter line of the low temperature manifold 50 mm, Euroconus G 3/4″ threaded connections

036

Use Euroconus fittings with G 3/4″ thread (see page 286) to connect the pipe to the L.T. manifold.

941



Kilma EKONPAKT

Code	Pump	Pack	Carton
941.05.60	Para 15/7 SC 130	1	1

Centre distance between attachments on the plant side 111 mm.
high performance adjustable flow pump EEI<0.23 - ERP 622/2012

KILMA-EKONPAKT

Fixed Point Control Unit Kilma-EKONPAKT series.

Distribution control unit for low temperature circuits consisting of mixing manifold including:
fixed-point setting unit b means of injection valve with thermostatic head internal immersion probe, air vent valve, safety thermostat, circulation pump, non return valve, circuit control unit, assembly of motorized shut-off valves on the return.

036

Kilma ZONE™

MULTI-ZONE BRASS MODULAR MANIFOLDS

Kilma-ZoneTM is the solution that allows a significant saving, eliminating the need to use several electrothermal actuators, powered at the same time.

The reduction of the number of actuators has consequent great impact on system construction, management* and maintenance costs.

** Average estimated savings of 50% for the electricity used to run the manifold*

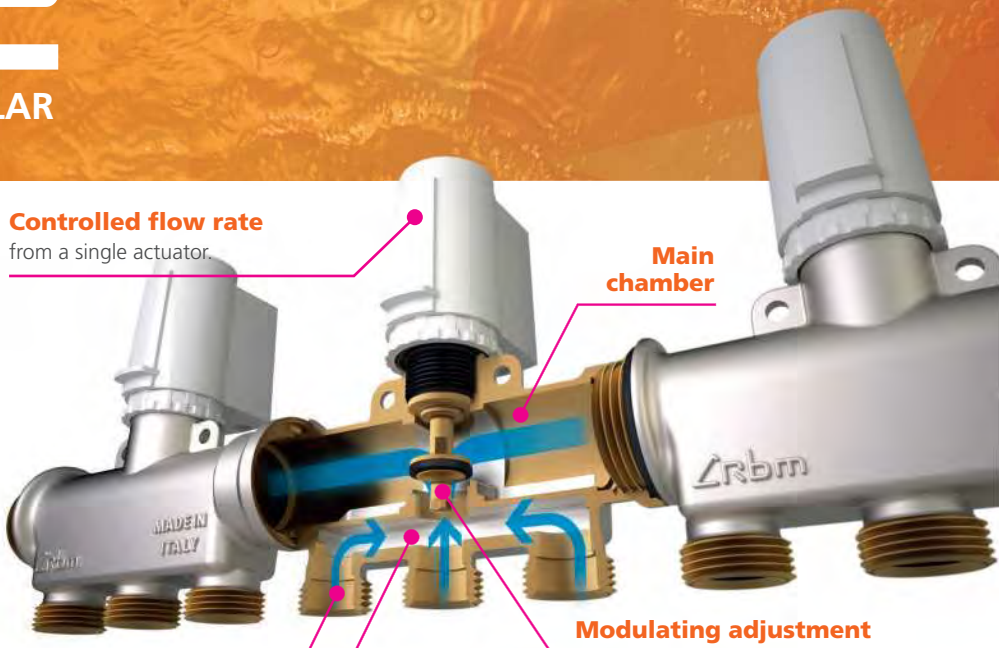

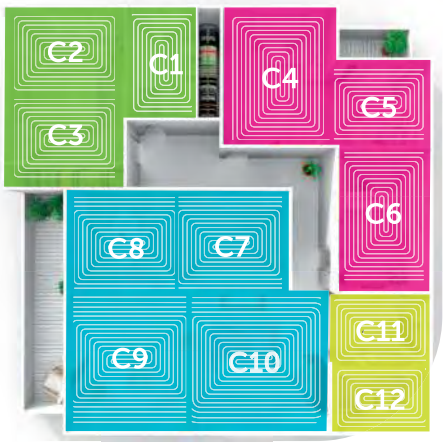

EXAMPLE OF SUBDIVISION INTO AREAS FOR A 110 M² FLAT:

Taking into consideration a 110 m2 apartment (set up as shown in the example below), served by 12 circuits divided into 4 separate thermal zones, by using Kilma-Zone there is a saving of 8 actuators with respect to traditional manifolds being used for the underfloor heating.

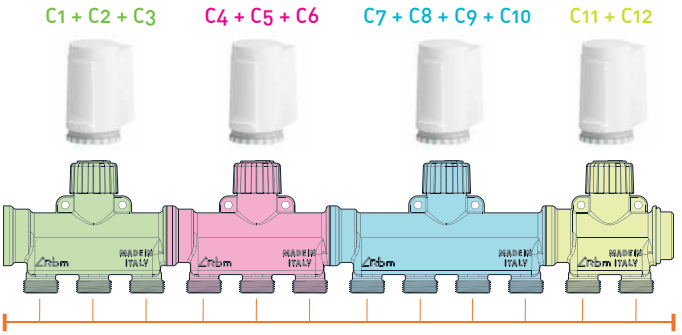

KILMA-ZONE MANIFOLD:
only 4 actuators needed to intercept 12 circuits divided into 4 thermal zones. All this in just a few cm.

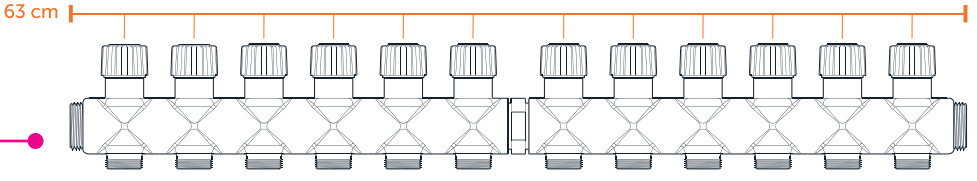

TRADITIONAL MANIFOLD:
12 actuators needed to intercept
12 circuits divided into 4 thermal zones.

- Centralised adjustment of multi-circuit zones, with reduction of the number of actuators and consequent great impact on system construction, management and maintenance costs;
- Environmentally friendly! Average savings of 50% in the electricity used to run the manifold;
- Super compact
- Insertion in cases 80 mm deep.

3615



Manifold delivery kit
Kit collecteur de refoulement
Комплект подающего коллектора
Kit colector circuit de trimitere
Kit de colector de impulsión
Bausatz Vorlauf-Sammelbehälter

Code	Size	Ways	Pack	Carton
3615.03.00	1"	3+3	1	1
3615.04.00	1"	4+4	1	1
3615.05.00	1"	5+5	1	1
3615.06.00	1"	6+6	1	1
3615.07.00	1"	7+7	1	1
3615.08.00	1"	8+8	1	1
3615.09.00	1"	9+9	1	1
3615.10.00	1"	10+10	1	1
3615.11.00	1"	11+11	1	1
3615.12.00	1"	12+12	1	1
3615.13.00	1"	13+13	1	1
3615.14.00	1"	14+14	1	1

Centre distance between connections via distribution manifolds 37 mm - threading Standard RBM W24,5x19F

KILMA-ZONE
Multi-zone brass modular manifolds kit.

Each kit contains:
n° 1 multi-way manifold unit complete with flow meters with lockshield and flow indicator function;
n° 1 pair of steel brackets for mounting manifolds;
n° 2 thermometers 0÷80 °C;
1 x 1" air / water automatic discharge terminal unit;
n° 1 manual 1" air / water discharge terminal unit.

- Temperature range 0÷80 °C
- Max operating pressure 10 Bar

Manifold kit can be inserted in walls constructed in 8 cm box, plastered.
Made up of flow meter supply indicator on each supply way.
Use fittings with Standard RBM thread (see pg. 181) for pipe connection.
Provide for Series 306 thermo-electric actuators (see page 122) for automatic shut-off of single circuits.
Provide for manifold with thermostatically-controlled valves series 3616 (compulsory completion accessory to be chosen according to circuit management configuration - see page 260)

028

3616



Brass modular manifold complete with valve with thermostatic option with manual hand wheel.

- Temperature range 0 ÷ 100 °C
- Max operating pressure 10 Bar

Manifold with thermostatically-controlled valve
Collecteur avec robinet thermostatique
Коллектор с терморегулирующим клапаном
Colector cu robinet termostatizabil
Colector con válvula controlada termostáticamente
Sammelbehälter mit mit Thermostat ausrüstbarem Ventil

Code	Size	Ways	Pack	Carton
3616.06.00	1"	1	1	10
3617.06.00	1"	2	1	10
3618.06.00	1"	3	1	10
3619.06.00	1"	4	1	10
3620.06.00	1"	5	1	10

Centre distance between connections via distribution manifolds 37 mm - threading Standard RBM W24,5x19F

Use fittings with Standard RBM thread (see pg. 181) for pipe connection.
Use fittings with Standard RBM thread (see pg. 181) to connect the pipe to the H.T. manifold.
Available thermal insulation shell accessory cod. 3673.X0.02

028

3201



Modular manifold, complete with flow meters, with lockshield and flow indicator function.

- Temperature range 0 ÷ 80 °C
- Max operating pressure 10 Bar

Use fittings with Standard RBM thread (see pg. 181) for pipe connection.
Available thermal insulation shell accessory cod. 3674.X0.02

Manifold with flow meters
Collecteur avec débitmètres
Коллектор с расходомерами
Colector cu debitmetre
Colector con flujómetros
Sammelbehälter mit Durchflussmessgeräten

Code	Size	Ways	Pack	Carton
3201.06.00	1"	1	1	10
3202.06.00	1"	2	1	10
3203.06.00	1"	3	1	10
3204.06.00	1"	4	1	10
3205.06.00	1"	5	1	10

Centre distance between connections via distribution manifolds 37 mm - threading Standard RBM W24,5x19F

028

3201



Modular manifold complete with micrometric lockshield regulating valves with graduated handwheel.

- Temperature range 0 ÷ 100 °C
- Max operating pressure 10 Bar

Use fittings with Standard RBM thread (see pg. 181) for pipe connection.
Available thermal insulation shell accessory cod. 3674.X0.02

Manifold with micrometric lockshield regulating valves
Collecteur avec coudes de réglage micrométriques
Коллектор с микрометрическими настроечными клапанами
Colector cu detentori micrometrici
Colector con detentores micrométricos
Sammelbehälter mit mikrometrischer Rücklaufverschraubung

Code	Size	Ways	Pack	Carton
3201.06.20	1"	1	1	10
3202.06.20	1"	2	1	10
3203.06.20	1"	3	1	10
3204.06.20	1"	4	1	10
3205.06.20	1"	5	1	10

Centre distance between connections via distribution manifolds 37 mm - threading Standard RBM W24,5x19F

028

3216



Air and water manual discharge terminal.

Standard installation on return line of modular brass manifold kits.

- Pressure gauge holder connection G 1/8" (for RBM Ø 40 radial pressure gauge - scale 0 - 16 bar - Code 7469.005)

Air and water manual discharge terminal unit
Groupe terminal de décharge manuelle air et eau
Завершающий узел ручного сброса воздуха и воды
Grup terminal de evacuare manual pentru aer și apă
Grupo terminal de descarga manual de aire y agua
Abschlusseinheit manueller Luft- und Wasserauslass

Code	Size	Pack	Carton
3216.06.50	1"	1	10

Pressure gauge holder connection G 1/8" (for RBM Ø 40 radial pressure gauge - scale 0 - 16 bar - Code 7469.005)
Available thermal insulation shell accessory cod. 3674.10.02

037

3215



Air and water automatic discharge terminal.

Standard installation on the delivery line of modular brass manifold kits.

- Pressure gauge holder connection G 1/8" (for RBM Ø 40 radial pressure gauge - scale 0 - 16 bar - Code 7469.005)

Air and water automatic discharge terminal unit.
Groupe terminal de décharge automatique air et eau
Завершающий узел автоматического сброса воздуха и воды
Grup terminal cu evacuare automat pentru aer și apă
Grupo terminal de descarga automática, de aire y agua
Abschlusseinheit automatischer Luft- und Wasserauslass

Code	Size	Pack	Carton
3215.06.50	1"	1	10

Pressure gauge holder connection G 1/8" (for RBM Ø 40 radial pressure gauge - scale 0 - 16 bar - Code 7469.005)
Available thermal insulation shell accessory cod. 3672.00.02

037

3217



By-pass group with rotatable elbow fittings for the system filling.

It consists of (loose pieces) :
Automatic air vent;
By-pass adjustment group;
Fittings and connection pipe.

- Pressure gauge holder connection G 1/8" (for RBM ø 40 axial pressure gauge - scale 0 - 10 bar - Code 832.005)

It allows for by-pass fixed adjustment.

By-pass group
Groupe By-pass
Байпасный узел
Grup By-pass
Grupo By-pass
Bypasseinheit

Code	Size	Pack	Carton
3217.06.00	1"	1	10

037

3673



Thermal insulation for modular brass manifold with valve with thermostatic option, made up from expanded polyethylene half-bearings with external anti-scratch coating.

Half-bearings fixed with double-sided adhesive tape already applied.

- Max temperature application -40°C ÷ +90 °C
- Fire behaviour class I
- Density 33 Kg/m^3

Thermal insulation for brass modular manifold with thermostatically-controlled valve series 3616
Isolation thermique pour collecteur modulaire en laiton avec robinet thermostatique série 3616
Термоизоляция для модульного коллектора из латуни с терморегулирующим клапаном серии 3616
Izolație termică pentru colectorul modular din alamă cu robinet termostatizabil seria 3616
Aislamiento térmico para colector modular de latón con válvula controlada termostáticamente de la serie 3616
Wärmeisolierung für Sammelbehälter, modular aus Messing mit mit Thermostat ausrüstbarem Ventil Serie 3616

Code	Ways	Pack	Carton
3673.10.02	1	1	1
3673.20.02	2	1	1
3673.30.02	3	1	1
3673.40.02	4	1	1
3673.50.02	5	1	1

037

3674



Thermal insulation for manifold with flow meters or manifold with micrometric lockshield valves, made up from expanded polyethylene half-bearings with external anti-scratch coating.

Half-bearings fixed with double-sided adhesive tape already applied.

- Max temperature application -40°C ÷ +90 °C
- Fire behaviour class I
- Density 33 Kg/m^3

Thermal insulation for brass modular manifold with flow meter or manifold with micrometric lockshield valves series 3201
Isolation thermique pour collecteur modulaire en laiton avec débitmètres ou collecteur avec coudes de réglage micrométriques série 3201
Термоизоляция для модульного коллектора из латуни с расходомерами потока или коллектора с микрометрическими настроечными клапанами серии 3201
Izolație termică pentru colectorul modular din alamă cu debitmetre sau colector cu detentori micrometrici seria 3201
Aislamiento térmico para colector modular de latón con flujómetros o colector con detentores micrométricos de la serie 3201
Wärmeisolierung für Sammelbehälter, modular aus Messing mit Durchflussmessgerät oder Sammelbehälter mit mikrometrischer Rücklaufverschraubung Serie 3201

Code	Ways	Pack	Carton
3674.10.02	1	1	1
3674.20.02	2	1	1
3674.30.02	3	1	1
3674.40.02	4	1	1
3674.50.02	5	1	1

037

3672



Thermal insulation for automatic air and water discharge terminal unit made from expanded polyethylene half-bearings with external anti-scratch coating.

Half-bearings fixed with double-sided adhesive tape already applied.

- Max temperature application -40°C ÷ +90 °C
- Fire behaviour class I
- Density 33 Kg/m³

Air and water manual discharge terminal thermal insulation series 3216

Isolation thermique groupe terminal de décharge manuelle d'air et d'eau série 3216

Термоизоляция завершающего узла ручного сброса воздуха и воды серии 3216

Izolație termică pentru grupul terminal de descărcare manual pentru aer și apă seria 3216

Aislamiento térmico del grupo terminal de descarga manual de aire y agua de la serie 3216

Wärmeisolierung Abschlusseinheit manueller Luft- und Wasserauslass Serie 3216

Code	Pack	Carton
3672.10.02	1	1

037

3672



Thermal insulation for automatic air and water discharge terminal unit made from expanded polyethylene half-bearings with external anti-scratch coating.

Half-bearings fixed with double-sided adhesive tape already applied.

- Max temperature application -40°C ÷ +90 °C
- Fire behaviour class I
- Density 33 Kg/m³

Air and water automatic discharge terminal thermal insulation series 3215

Isolation thermique groupe terminal de décharge automatique d'air et d'eau série 3215

Термоизоляция завершающего узла автоматического сброса воздуха и воды серии 3215

Izolație termică pentru grupul terminal de descărcare automată pentru aer și apă seria 3215

Aislamiento térmico del grupo terminal de descarga automática de aire y agua de la serie 3215

Wärmeisolierung Abschlusseinheit automatischer Luft- und Wasserauslass Serie 3215

Code	Pack	Carton
3672.00.02	1	1

037

GUIDE TO THE CHOICE OF INSULATING CASING FOR MANIFOLD KIT SERIES 3615

The choice of insulating casings to insulate the manifold kit must be carried out according to the precise configuration of the single modules that comprise the delivery and return manifold kit. Refer to the table below for the correct codes to order:

No. branches Manifold kit	Module composition	Insulation codes delivery manifold	Insulation codes return manifold	Insulation codes drain units
3-way	3	3674.30.02 (1 pc)	*	3672.00.02 + 3672.10.02
4-way	4	3674.40.02 (1 pc)	*	3672.00.02 + 3672.10.02
5-way	5	3674.50.02 (1 pc)	*	3672.00.02 + 3672.10.02
6-way	3+3	3674.30.02 (2 pz)	*	3672.00.02 + 3672.10.02
7-way	3+4	3674.30.02 (1 pc) + 3674.40.02 (1 pc)	*	3672.00.02 + 3672.10.02
8-way	4+4	3674.40.02 (2 pc)	*	3672.00.02 + 3672.10.02
9-way	5+4	3674.50.02 (1 pc) + 3674.40.02 (1 pc)	*	3672.00.02 + 3672.10.02
10-way	5+5	3674.50.02 (2 pc)	*	3672.00.02 + 3672.10.02
11-way	3+4+4	3674.30.02 (1 pc) + 3674.40.02 (2 pc)	*	3672.00.02 + 3672.10.02
12-way	4+4+4	3674.40.02 (3 pc)	*	3672.00.02 + 3672.10.02
13-way	5+4+4	3674.50.02 (1 pc) + 3674.40.02 (2 pc)	*	3672.00.02 + 3672.10.02
14-way	5+5+4	3674.50.02 (2 pc) + 3674.40.02 (1 pc)	*	3672.00.02 + 3672.10.02

** To order according to the Kilma-Zone modules configuration used.*

3668



Pair of steel brackets with collar and DIN guide for fixing of brass multi-zone modular manifolds 3615 series.

Suitable for cases code 2606.X0.02
Provided as standard in 3615 series multi-zone modular brass manifolds kits.

Pair of steel brackets for fixing brass multi-zone modular manifolds series 3615
Paire d'étriers en acier pour fixer des collecteurs modulaires multi-zone en laiton série 3615
Пара стальных скоб для крепления модульных многозонных коллекторов из латуни серии 3615
Pereche de console din oțel pentru fixarea colectoarelor modulare cu zone multiple din alamă seria 3615
Par de bridas de acero para la fijación de los colectores modulares multi-zona de latón de la serie 3615
Bügelpaar aus Stahl zur Befestigung der modularen Multizonen-Sammelbehälter aus Messing Serie 3615

Code	Ways	Pack	Carton
3668.03.00	3	1	1
3668.04.00	4	1	1
3668.05.00	5	1	1
3668.06.00	6	1	1
3668.07.00	7	1	1
3668.08.00	8	1	1
3668.09.00	9	1	1
3668.10.00	10	1	1
3668.11.00	11	1	1
3668.12.00	12	1	1
3668.13.00	13	1	1
3668.14.00	14	1	1

037

8647



Thermometer for 3615, 3201, 3202 series manifold kit

- Thermometer scale 0 ÷ 80 °C

Thermometer for 3615, 3201, 3202 series manifold kit
Thermomètre pour kit collecteurs les séries 3615, 3201, 3202
Термометр для комплекта коллекторов серии 3615, 3201, 3202
Termometru pentru kiturile colectoare seria 3615, 3201, 3202
Termómetro para kit de colectores de la serie 3615, 3201, 3202
Thermometer für Bausatz Sammelbehälter Serie 3615, 3201, 3202

Code	Pack	Carton
864.70.05	1	1

037

MATCHING CHART KILMA-ZONE™ MANIFOLDS / HOUSING BOXES

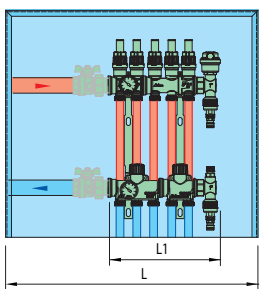

MULTI-ZONE BRASS MODULAR MANIFOLDS WITH AIR VENTS **3615 series**											
3	4	5	6	7	8	9	10	11	12	13	14
L1 (mm) 170	L1 (mm) 207	L1 (mm) 247	L1 (mm) 284	L1 (mm) 321	L1 (mm) 358	L1 (mm) 398	L1 (mm) 435	L1 (mm) 472	L1 (mm) 509	L1 (mm) 549	L1 (mm) 586
BOX L=400 Code **2606.40.02**			BOX L=600 Code **2606.60.02**						BOX L=800 Code **2606.80.02**		

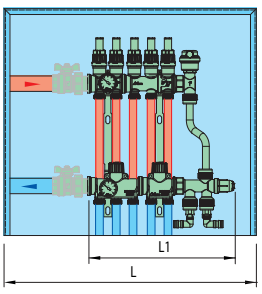

MULTI-ZONE BRASS MODULAR MANIFOLDS WITH BY-PASS **3615 series**											
3	4	5	6	7	8	9	10	11	12	13	14
L1 (mm) 245	L1 (mm) 282	L1 (mm) 322	L1 (mm) 359	L1 (mm) 396	L1 (mm) 433	L1 (mm) 473	L1 (mm) 510	L1 (mm) 547	L1 (mm) 584	L1 (mm) 624	L1 (mm) 661
BOX L=400 Code **2606.40.02**	BOX L=600 Code **2606.60.02**					BOX L=800 Code **2606.80.02**					

* The L1 variable may differ slightly according to the configuration adopted for the manifold modules with valves with thermostatic option.

COMPACT MODULAR MANIFOLDS KIT IN BRASS

(CENTRE DISTANCE 37 MM)

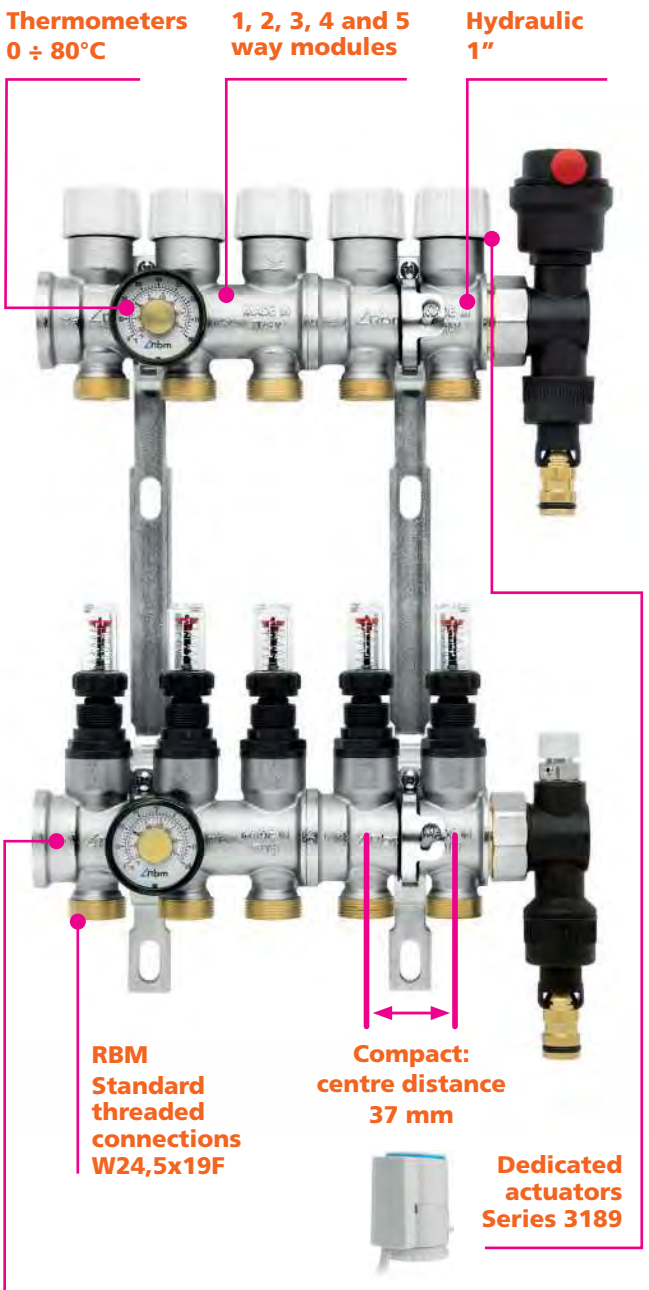

SUPER COMPACT

Manifold centre distance 37 mm

Manifold centre distance 50 mm

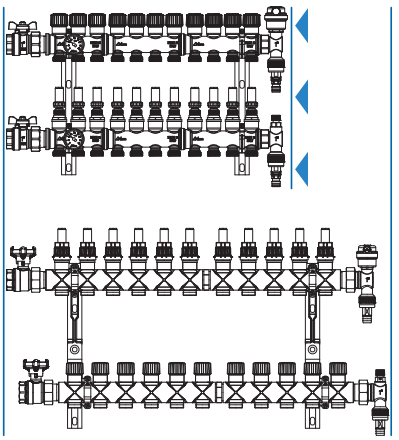

- **Compact size:** Insertion in boxes 80 mm th. (Box1 series 2606 boxes);
- **Manual or automatic shut-off** on-off of individual circuits;
- **Easy system loading/unloading:** thanks to end cocks;
- **Direct reading on flow meter** of flow rate value in transit on individual circuit;
- **Attention to materials:** Nickel-plated brass manifold, high quality material, for maximum reliability over time; unlike steel manifolds, not subject to corrosion which could jeopardise operation of the system.
- **Automatic venting valve built-in**
- **Versions available in Kits and individual components which can be assembled:**



3202



Modular brass manifold kit with a 37mm centre-to-centre distance
Kit collecteurs modulaires en laiton entraxe 37 mm
Комплект модульных коллекторов из латуни с межосевым расстоянием 37 мм
Kit colectoare modulare din alamă interaxă 37 mm
Kit de colectores modulares de latón con distancia entre ejes de 37 mm
Bausatz modulare Sammelbehälter aus Messing Weite 37 mm

Code	Size	Ways	Pack	Carton
3202.06.10	1″	2+2	1	1
3203.06.10	1″	3+3	1	1
3204.06.10	1″	4+4	1	1
3205.06.10	1″	5+5	1	1
3206.06.10	1″	6+6	1	1
3207.06.10	1″	7+7	1	1
3208.06.10	1″	8+8	1	1
3209.06.10	1″	9+9	1	1
3210.06.10	1″	10+10	1	1
3211.06.10	1″	11+11	1	1
3212.06.10	1″	12+12	1	1
3213.06.10	1″	13+13	1	1
3214.06.10	1″	14+14	1	1

Centre distance between connections via distribution manifolds 37 mm - threading Standard RBM W24,5x19F

Modular brass manifold kit.

Each kit contains:
n° 1 multi-way manifold unit complete with flow meters with lockshield and flow indicator function;
n° 1 multi-way manifold unit complete with valves with thermostatic option with hand wheel;
n° 1 pair of steel brackets for mounting manifolds;
n° 2 thermometers 0÷80 °C;
1 x 1" air / water automatic discharge terminal unit;
n° 1 manual 1" air / water discharge terminal unit.

- Temperature range 0÷80 °C
- Max operating pressure 10 Bar

028

Manifold kit can be inserted in walls constructed in 8 cm box, plastered.
Made up of flow meter supply indicator on each supply way.
Use fittings with Standard RBM thread (see pg. 181) for pipe connection.
Provide for Series 3189 thermo-electric actuators (see page 181) for automatic shut-off of single circuits.

3202



Modular brass manifold kit with a 37mm centre-to-centre distance
Kit collecteurs modulaires en laiton entraxe 37 mm
Комплект модульных коллекторов из латуни с межосевым расстоянием 37 мм
Kit colectoare modulare din alamă interaxă 37 mm
Kit de colectores modulares de latón con distancia entre ejes de 37 mm
Bausatz modulare Sammelbehälter aus Messing Weite 37 mm

Code	Size	Ways	Pack	Carton
3202.06.60	1″	2+2	1	1
3203.06.60	1″	3+3	1	1
3204.06.60	1″	4+4	1	1
3205.06.60	1″	5+5	1	1
3206.06.60	1″	6+6	1	1
3207.06.60	1″	7+7	1	1
3208.06.60	1″	8+8	1	1
3209.06.60	1″	9+9	1	1
3210.06.60	1″	10+10	1	1
3211.06.60	1″	11+11	1	1
3212.06.60	1″	12+12	1	1
3213.06.60	1″	13+13	1	1
3214.06.60	1″	14+14	1	1

Centre distance between connections via distribution manifolds 37 mm - threading Standard RBM W24,5x19F

Modular brass manifold kit.

Each kit contains:
n° 1 multi-way manifold unit complete with flow meters with lockshield and flow indicator function;
n° 1 multi-way manifold unit complete with valves with thermostatic option with hand wheel;
n° 1 pair of steel brackets for mounting manifolds;
n° 2 thermometers 0÷80 °C;
n° 1 3/8″ automatic vent valve;
n° 1 adjustable by-pass valve complete with connections for system filling.

- Temperature range 0÷80 °C
- Max operating pressure 10 Bar

Manifold kit can be inserted in walls constructed in 8 cm box, plastered.
Made up of flow meter supply indicator on each supply way.
Use fittings with Standard RBM thread (see pg. 181) for pipe connection.
Provide for Series 3189 thermo-electric actuators (see page 181) for automatic shut-off of single circuits.

028

3201



Modular brass complete with valves with thermostatic option and manual handwheel.

- Temperature range 0 ÷ 100 °C
- Max operating pressure 10 Bar

Use fittings with Standard RBM thread (see pg. 181) for pipe connection.
Available thermal insulation shell accessory cod. 3674.X0.02

Manifold with thermostatic valves
Collecteur avec vannes thermostatiques
Коллектор с терморегулирующими клапанами
Colector cu robineți termostatizabili
Colector con válvulas controladas termostáticamente
Sammelbehälter mit mit Thermostat ausrüstbaren Ventilen

Code	Size	Ways	Pack	Carton
3201.06.30	1″	1	1	10
3202.06.30	1″	2	1	10
3203.06.30	1″	3	1	10
3204.06.30	1″	4	1	10
3205.06.30	1″	5	1	10

Centre distance between connections via distribution manifolds 37 mm - threading Standard RBM W24,5x19F

028

3201



Modular manifold, complete with flow meters, with lockshield and flow indicator function.

- Temperature range 0 ÷ 80 °C
- Max operating pressure 10 Bar

Use fittings with Standard RBM thread (see pg. 181) for pipe connection.
Available thermal insulation shell accessory cod. 3674.X0.02

Manifold with flow meters
Collecteur avec débitmètres
Коллектор с расходомерами
Colector cu debitmetre
Colector con flujómetros
Sammelbehälter mit Durchflussmessgeräten

Code	Size	Ways	Pack	Carton
3201.06.00	1″	1	1	10
3202.06.00	1″	2	1	10
3203.06.00	1″	3	1	10
3204.06.00	1″	4	1	10
3205.06.00	1″	5	1	10

Centre distance between connections via distribution manifolds 37 mm - threading Standard RBM W24,5x19F

028

3201



028

Modular manifold complete with micrometric lockshield regulating valves with graduated handwheel.

- Temperature range 0 ÷ 100 °C
- Max operating pressure 10 Bar

Manifold with micrometric lockshield regulating valves
Collecteur avec coudes de réglage micrométriques
Коллектор с микрометрическими настроечными клапанами
Colector cu detentori micrometrici
Colector con detentores micrométricos
Sammelbehälter mit mikrometrischer Rücklaufverschraubung

Code	Size	Ways	Pack	Carton
3201.06.20	1″	1	1	10
3202.06.20	1″	2	1	10
3203.06.20	1″	3	1	10
3204.06.20	1″	4	1	10
3205.06.20	1″	5	1	10

Centre distance between connections via distribution manifolds 37 mm - threading Standard RBM W24,5x19F

Use fittings with Standard RBM thread (see pg. 181) for pipe connection.
Available thermal insulation shell accessory cod. 3674.X0.02

3216



037

Air and water manual discharge terminal.

Standard installation on return line of modular brass manifold kits.

- Pressure gauge holder connection G 1/8″ (for RBM Ø 40 radial pressure gauge - scale 0 - 16 bar - Code 7469.005)

Air and water manual discharge terminal unit
Groupe terminal de décharge manuelle air et eau
Завершающий узел ручного сброса воздуха и воды
Grup terminal de evacuare manual pentru aer și apă
Grupo terminal de descarga manual de aire y agua
Abschlusseinheit manueller Luft- und Wasserauslass

Code	Size	Pack	Carton
3216.06.50	1″	1	10

Pressure gauge holder connection G 1/8″ (for RBM Ø 40 radial pressure gauge - scale 0 - 16 bar - Code 7469.005)
Available thermal insulation shell accessory cod. 3674.10.02

3215



037

Air and water automatic discharge terminal.

Standard installation on the delivery line of modular brass manifold kits.

- Pressure gauge holder connection G 1/8″ (for RBM Ø 40 radial pressure gauge - scale 0 - 16 bar - Code 7469.005)

Air and water automatic discharge terminal unit.
Groupe terminal de décharge automatique air et eau
Завершающий узел автоматического сброса воздуха и воды
Grup terminal cu evacuare automat pentru aer și apă
Grupo terminal de descarga automática, de aire y agua
Abschlusseinheit automatischer Luft- und Wasserauslass

Code	Size	Pack	Carton
3215.06.50	1″	1	10

Pressure gauge holder connection G 1/8″ (for RBM Ø 40 radial pressure gauge - scale 0 - 16 bar - Code 7469.005)
Available thermal insulation shell accessory cod. 3672.00.02

3217



037

By-pass group with rotatable elbow fittings for the system filling.

It consists of (loose pieces) :
Automatic air vent;
By-pass adjustment group;
Fittings and connection pipe.

- Pressure gauge holder connection G 1/8″ (for RBM ø 40 axial pressure gauge - scale 0 - 10 bar - Code 832.005)

By-pass group
Groupe By-pass
Байпасный узел
Grup By-pass
Grupo By-pass
Bypasseinheit

Code	Size	Pack	Carton
3217.06.00	1″	1	10

It allows for by-pass fixed adjustment.

3674



Thermal insulation for manifold with flow meters or manifold with micrometric lockshield valves, made up from expanded polyethylene half-bearings with external anti-scratch coating.

Half-bearings fixed with double-sided adhesive tape already applied.

- Max temperature application -40°C ÷ +90 °C
- Fire behaviour class I
- Density 33 Kg/m^3

Thermal insulation for brass modular manifold with flow meter or manifold with micrometric lockshield valves series 3201
Isolation thermique pour collecteur modulaire en laiton avec débitmètres ou collecteur avec coudes de réglage micrométriques série 3201
Термоизоляция для модульного коллектора из латуни с расходомерами потока или коллектора с микрометрическими настроечными клапанами серии 3201
Izolație termică pentru colectorul modular din alamă cu debitmetre sau colector cu detentori micrometrici seria 3201
Aislamiento térmico para colector modular de latón con flujómetros o colector con detentores micrométricos de la serie 3201
Wärmeisolierung für Sammelbehälter, modular aus Messing mit Durchflussmessgerät oder Sammelbehälter mit mikrometrischer Rücklaufverschraubung Serie 3201

Code	Ways	Pack	Carton
3674.10.02	1	1	1
3674.20.02	2	1	1
3674.30.02	3	1	1
3674.40.02	4	1	1
3674.50.02	5	1	1

037

3672



Thermal insulation for automatic air and water discharge terminal unit made from expanded polyethylene half-bearings with external anti-scratch coating.

Half-bearings fixed with double-sided adhesive tape already applied.

- Max temperature application -40°C ÷ +90 °C
- Fire behaviour class I
- Density 33 Kg/m^3

Air and water manual discharge terminal thermal insulation series 3216
Isolation thermique groupe terminal de décharge manuelle d'air et d'eau série 3216
Термоизоляция завершающего узла ручного сброса воздуха и воды серии 3216
Izolație termică pentru grupul terminal de descărcare manual pentru aer și apă seria 3216
Aislamiento térmico del grupo terminal de descarga manual de aire y agua de la serie 3216
Wärmeisolierung Abschlusseinheit manueller Luft- und Wasserauslass Serie 3216

Code	Pack	Carton
3672.10.02	1	1

037

3672



Thermal insulation for automatic air and water discharge terminal unit made from expanded polyethylene half-bearings with external anti-scratch coating.

Half-bearings fixed with double-sided adhesive tape already applied.

- Max temperature application -40°C ÷ +90 °C
- Fire behaviour class I
- Density 33 Kg/m^3

Air and water automatic discharge terminal thermal insulation series 3215
Isolation thermique groupe terminal de décharge automatique d'air et d'eau série 3215
Термоизоляция завершающего узла автоматического сброса воздуха и воды серии 3215
Izolație termică pentru grupul terminal de descărcare automată pentru aer și apă seria 3215
Aislamiento térmico del grupo terminal de descarga automática de aire y agua de la serie 3215
Wärmeisolierung Abschlusseinheit automatischer Luft- und Wasserauslass Serie 3215

Code	Pack	Carton
3672.00.02	1	1

037

GUIDE TO THE CHOICE OF INSULATING CASING FOR MANIFOLD KIT SERIES 3202

The choice of insulating casings to insulate the manifold kit must be carried out according to the precise configuration of the single modules that comprise the delivery and return manifold kit. Refer to the table below for the correct codes to order:

No. branches Manifold kit	Module composition	Insulation codes delivery manifold and return manifold	Insulation codes drain units
3-way	3	3674.30.02 (2 pc)	3672.00.02 + 3672.10.02
4-way	4	3674.40.02 (2 pc)	3672.00.02 + 3672.10.02
5-way	5	3674.50.02 (2 pc)	3672.00.02 + 3672.10.02
6-way	3+3	3674.30.02 (4 pc)	3672.00.02 + 3672.10.02
7-way	3+4	3674.30.02 (2 pc) + 3674.40.02 (2 pc)	3672.00.02 + 3672.10.02
8-way	4+4	3674.40.02 (4 pz)	3672.00.02 + 3672.10.02
9-way	5+4	3674.50.02 (2 pc) + 3674.40.02 (2 pc)	3672.00.02 + 3672.10.02
10-way	5+5	3674.50.02 (4 pc)	3672.00.02 + 3672.10.02
11-way	3+4+4	3674.30.02 (2 pc) + 3674.40.02 (4 pc)	3672.00.02 + 3672.10.02
12-way	4+4+4	3674.40.02 (6 pc)	3672.00.02 + 3672.10.02
13-way	5+4+4	3674.50.02 (2 pc) + 3674.40.02 (4 pc)	3672.00.02 + 3672.10.02
14-way	5+5+4	3674.50.02 (4 pc) + 3674.40.02 (2 pc)	3672.00.02 + 3672.10.02

3248



Pair of steel brackets with collar for the aligned fixing of the series 3201 - 3202 brass modular manifolds.

Suitable for cases code 2606.X0.02
Provided as standard in 3202 series modular brass manifolds kits.

Pair of steel brackets for the aligned fixing of the series 3201 - 3202 brass modular manifolds
Paire d'étriers en acier pour la fixation alignée des collecteurs modulaires en laiton série 3201 - 3202
Пара стальных скоб для выровненного по оси крепления модульных коллекторов из латуни серии 3201 - 3202
Pereche de console pentru fixarea aliniată a colectoarelor modulare din alamă seria 3201 - 3202
Par de bridas de acero para la fijación alineada de los colectores modulares de latón de la serie 3201 - 3202
Bügelpaar aus Stahl zur ausgerichteten Befestigung der modularen Sammelbehälter aus Messing Serie 3201 - 3202

Code	Pack	Carton
3248.06.00	1	10

037

8647



Thermometer for 3615, 3201, 3202 series manifold kit

- Thermometer scale 0 ÷ 80 °C

Thermometer for 3615, 3201, 3202 series manifold kit
Thermomètre pour kit collecteurs les séries 3615, 3201, 3202
Термометр для комплекта коллекторов серии 3615, 3201, 3202
Termometru pentru kiturile colectoare seria 3615, 3201, 3202
Termómetro para kit de colectores de la serie 3615, 3201, 3202
Thermometer für Bausatz Sammelbehälter Serie 3615, 3201, 3202

Code	Pack	Carton
864.70.05	1	1

037

MATCHING CHART MANIFOLDS / HOUSING BOXES

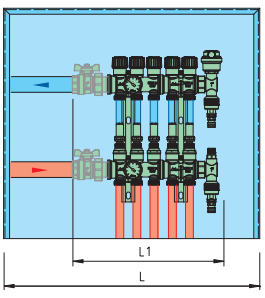

COMPACT MANIFOLDS KIT MODULAR IN BRASS WITH AIR VENTS **3202 series**												
2	3	4	5	6	7	8	9	10	11	12	13	14
L1 (mm) 133	L1 (mm) 170	L1 (mm) 207	L1 (mm) 247	L1 (mm) 284	L1 (mm) 321	L1 (mm) 358	L1 (mm) 398	L1 (mm) 435	L1 (mm) 472	L1 (mm) 509	L1 (mm) 549	L1 (mm) 586
BOX L=400 Code **2606.40.02**				BOX L=600 Code **2606.60.02**						BOX L=800 Code **2606.80.02**		

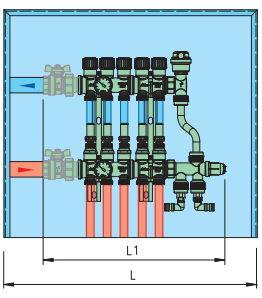

COMPACT MANIFOLDS KIT MODULAR IN BRASS WITH BY-PASS **3202 series**												
2	3	4	5	6	7	8	9	10	11	12	13	14
L1 (mm) 208	L1 (mm) 245	L1 (mm) 282	L1 (mm) 322	L1 (mm) 359	L1 (mm) 396	L1 (mm) 433	L1 (mm) 473	L1 (mm) 510	L1 (mm) 547	L1 (mm) 584	L1 (mm) 624	L1 (mm) 661
BOX L=400 Code **2606.40.02**		BOX L=600 Code **2606.60.02**					BOX L=800 Code **2606.80.02**					

To define the coupling manifolds / containment boxes, it has already been considered as an obstruction than equal to 80 mm, necessary for the installation of an accessory interception valve.

608



Brass compact manifold kit
Kit collecteurs compacts en laiton
Комплект для компактных коллекторов из латуни
Kit colectoare compacte din alamă
Kit colectores compactos de latón
Bausatz Sammelbehälter kompakt aus Messing

Code	Size	Ways	Pack	Carton
608.26.10	1″	2+2	1	1
608.06.10	1″	3+3	1	1
609.06.10	1″	4+4	1	1
610.06.10	1″	5+5	1	1
611.06.10	1″	6+6	1	1
612.06.10	1″	7+7	1	1
613.06.10	1″	8+8	1	1
614.06.10	1″	9+9	1	1
615.06.10	1″	10+10	1	1
616.06.10	1″	11+11	1	1
616.12.10	1″	12+12	1	1
616.13.10	1″	13+13	1	1
616.14.10	1″	14+14	1	1

Centre distance between connections via distribution manifolds 50 mm - threading EUROCONUS G3/4″ UNI-EN-ISO 228

Brass compact manifold kit.

Each kit contains:
n° 1 multi-way manifold unit complete with flow meters with lockshield and flow indicator function;
n° 1 multi-way manifold unit complete with valves with thermostatic option with hand wheel;
1 pair of plastic brackets for fixing manifolds.

- Temperature range 0÷80 °C
- Max operating pressure 10 Bar

Manifold kit can be inserted in walls constructed in 8 cm box, plastered. Made up of flow meter supply indicator on each supply way. Loose packaged components.
Use Euroconus fittings with G3/4″ thread (see page 181) for pipe connection.

028

2028



Brass compact manifold kit
Kit collecteurs compacts en laiton
Комплект для компактных коллекторов из латуни
Kit colectoare compacte din alamă
Kit colectores compactos de latón
Bausatz Sammelbehälter kompakt aus Messing

Code	Size	Ways	Pack	Carton
2028.06.10	1″	2+2	1	1
2029.06.10	1″	3+3	1	1
2030.06.10	1″	4+4	1	1
2031.06.10	1″	5+5	1	1
2032.06.10	1″	6+6	1	1
2033.06.10	1″	7+7	1	1
2034.06.10	1″	8+8	1	1
2035.06.10	1″	9+9	1	1
2036.06.10	1″	10+10	1	1
2037.06.10	1″	11+11	1	1
2038.06.10	1″	12+12	1	1
2038.13.10	1″	13+13	1	1
2038.14.10	1″	14+14	1	1

Kit including distribution way connections centre distance 50mm, thread EUROCONUS G3/4″ UNI-EN-ISO 228

Brass compact manifold kit.

Each kit contains:
n° 1 multi-way manifold unit complete with flow meters with lockshield and flow indicator function;
n° 1 multi-way manifold unit complete with valves with thermostatic option with hand wheel;
1 pair of plastic brackets for fixing manifolds;
n° 2 thermometers 0÷80 °C;
n° 2 union fittings;
1 x 1″ air / water automatic discharge terminal unit;
n° 1 manual 1" air / water discharge terminal unit.

- Temperature range 0÷80 °C
- Max operating pressure 10 Bar

Manifold kit can be inserted in walls constructed in 8 cm box, plastered. Made up of flow meter supply indicator on each supply way. Loose packaged components.
Use Euroconus fittings with G3/4″ thread (see page 181) for pipe connection.
Composition that can be used in combination with mixing units.

028

2028



Brass compact manifold kit
Kit collecteurs compacts en laiton
Комплект для компактных коллекторов из латуни
Kit colectoare compacte din alamă
Kit colectores compactos de latón
Bausatz Sammelbehälter kompakt aus Messing

Code	Size	Ways	Pack	Carton
2028.06.60	1″	2+2	1	1
2029.06.60	1″	3+3	1	1
2030.06.60	1″	4+4	1	1
2031.06.60	1″	5+5	1	1
2032.06.60	1″	6+6	1	1
2033.06.60	1″	7+7	1	1
2034.06.60	1″	8+8	1	1
2035.06.60	1″	9+9	1	1
2036.06.60	1″	10+10	1	1
2037.06.60	1″	11+11	1	1
2038.06.60	1″	12+12	1	1
2038.13.60	1″	13+13	1	1

Brass compact manifold kit.

Each kit contains:
n° 1 multi-way manifold unit complete with flow meters with lockshield and flow indicator function;
n° 1 multi-way manifold unit complete with valves with thermostatic option with hand wheel;
1 pair of plastic brackets for fixing manifolds;
n° 2 thermometers 0÷80 °C;
n° 2 union fittings;
n° 1 3/8″ automatic vent valve;
n° 1 adjustable by-pass valve complete with connections for system filling.

- Temperature range 0÷80 °C
- Max operating pressure 10 Bar

Centre distance between connections via distribution manifolds 50 mm - threading EUROCONUS G3/4″ UNI-EN-ISO 228

Manifold kit can be inserted in walls constructed in 8 cm box, plastered. Made up of flow meter supply indicator on each supply way. Loose packaged components.
Use Euroconus fittings with G3/4″ thread (see page 181) for pipe connection.
Composition that can be used in combination with mixing units.

028

2028



Brass compact manifold kit
Kit collecteurs compacts en laiton
Комплект для компактных коллекторов из латуни
Kit colectoare compacte din alamă
Kit colectores compactos de latón
Bausatz Sammelbehälter kompakt aus Messing

Code	Size	Ways	Pack	Carton
2028.06.20	1″	2+2	1	1
2029.06.20	1″	3+3	1	1
2030.06.20	1″	4+4	1	1
2031.06.20	1″	5+5	1	1
2032.06.20	1″	6+6	1	1
2033.06.20	1″	7+7	1	1
2034.06.20	1″	8+8	1	1
2035.06.20	1″	9+9	1	1
2036.06.20	1″	10+10	1	1
2037.06.20	1″	11+11	1	1
2038.06.20	1″	12+12	1	1
2038.13.20	1″	13+13	1	1
2038.14.20	1″	14+14	1	1

Brass compact manifold kit.

Each kit contains:
n° 1 multi-way manifold unit complete with flow meters with lockshield and flow indicator function;
n° 1 multi-way manifold unit complete with valves with thermostatic option with hand wheel;
1 pair of plastic brackets for fixing manifolds;
n° 2 1" ball valves with built-in thermometer 0÷80 °C;
n° 2 union fittings;
1 x 1″ air / water automatic discharge terminal unit;
n° 1 manual 1" air / water discharge terminal unit.

- Temperature range 0÷80 °C
- Max operating pressure 10 Bar

Centre distance between connections via distribution manifolds 50 mm - threading EUROCONUS G3/4″ UNI-EN-ISO 228

Manifold kit can be inserted in walls constructed in 8 cm box, plastered. Made up of flow meter supply indicator on each supply way. Loose packaged components.
Use Euroconus fittings with G3/4″ thread (see page 181) for pipe connection.

028

2028



Brass compact manifold kit
Kit collecteurs compacts en laiton
Комплект для компактных коллекторов из латуни
Kit colectoare compacte din alamă
Kit colectores compactos de latón
Bausatz Sammelbehälter kompakt aus Messing

Code	Size	Ways	Pack	Carton
2028.06.50	1″	2+2	1	1
2029.06.50	1″	3+3	1	1
2030.06.50	1″	4+4	1	1
2031.06.50	1″	5+5	1	1
2032.06.50	1″	6+6	1	1
2033.06.50	1″	7+7	1	1
2034.06.50	1″	8+8	1	1
2035.06.50	1″	9+9	1	1
2036.06.50	1″	10+10	1	1
2037.06.50	1″	11+11	1	1
2038.06.50	1″	12+12	1	1
2038.13.50	1″	13+13	1	1

Brass compact manifold kit.

Each kit contains:
n° 1 multi-way manifold unit complete with flow meters with lockshield and flow indicator function;
n° 1 multi-way manifold unit complete with valves with thermostatic option with hand wheel;
1 pair of plastic brackets for fixing manifolds;
n° 2 1" ball valves with built-in thermometer 0÷80 °C;
n° 2 union fittings;
n° 1 3/8″ automatic vent valve;
n° 1 adjustable by-pass valve complete with connections for system filling.

- Temperature range 0÷80 °C
- Max operating pressure 10 Bar

Centre distance between connections via distribution manifolds 50 mm - threading EUROCONUS G3/4″ UNI-EN-ISO 228

Manifold kit can be inserted in walls constructed in 8 cm box, plastered. Made up of flow meter supply indicator on each supply way. Loose packaged components.
Use Euroconus fittings with G3/4″ thread (see page 181) for pipe connection.

028

1410



Polymer compact manifold kit
Kit collecteurs compacts en polymère
Комплект для компактных коллекторов из полимера
Kit colectoare compacte din polimeri
Kit colectores compactos de polímero
Bausatz Sammelbehälter kompakt aus Polymer

Code	Size	Ways	Pack	Carton
1410.06.10	1″	2+2	1	1
1411.06.10	1″	3+3	1	1
1412.06.10	1″	4+4	1	1
1413.06.10	1″	5+5	1	1
1414.06.10	1″	6+6	1	1
1415.06.10	1″	7+7	1	1
1416.06.10	1″	8+8	1	1
1417.06.10	1″	9+9	1	1
1418.06.10	1″	10+10	1	1
1419.06.10	1″	11+11	1	1
1420.06.10	1″	12+12	1	1
1420.13.10	1″	13+13	1	1
1420.14.10	1″	14+14	1	1

Compact polymer manifolds kit.

Each kit contains:
n° 1 multi-way manifold unit complete with flow meters with lockshield and flow indicator function;
n° 1 multi-way manifold unit complete with valves with thermostatic option with hand wheel;
1 pair of plastic brackets for fixing manifolds.

- Temperature range 5÷80 °C
- Max. operating pressure 8 Bar

Centre distance between connections via distribution manifolds 50 mm - threading EUROCONUS G3/4″ UNI-EN-ISO 228

Manifold kit can be inserted in walls constructed in 8 cm box, plastered. Flow meter supply indicator on each supply way.
Use Euroconus fittings with G3/4″ thread (see page 181) for pipe connection.

Warning: branch pipe fittings tightened to max torque of 30Nm.

028

1410



Polymer compact manifold kit
Kit collecteurs compacts en polymère
Комплект для компактных коллекторов из полимера
Kit colectoare compacte din polimeri
Kit colectores compactos de polímero
Bausatz Sammelbehälter kompakt aus Polymer

Code	Size	Ways	Pack	Carton
1410.06.40	1"	2+2	1	1
1411.06.40	1"	3+3	1	1
1412.06.40	1"	4+4	1	1
1413.06.40	1"	5+5	1	1
1414.06.40	1"	6+6	1	1
1415.06.40	1"	7+7	1	1
1416.06.40	1"	8+8	1	1
1417.06.40	1"	9+9	1	1
1418.06.40	1"	10+10	1	1
1419.06.40	1"	11+11	1	1
1420.06.40	1"	12+12	1	1
1420.13.40	1"	13+13	1	1
1420.14.40	1"	14+14	1	1

Compact polymer manifolds kit.

Each kit contains:
n° 1 multi-way manifold unit complete with flow meters with lockshield and flow indicator function;
n° 1 multi-way manifold unit complete with valves with thermostatic option with hand wheel;
1 pair of plastic brackets for fixing manifolds; 2 thermometers 0-80 °C;
n° 2 union fittings;
1 x 1" air / water automatic discharge terminal unit;
n° 1 manual 1" air / water discharge terminal unit.

Centre distance between connections via distribution manifolds 50 mm - threading EUROCONUS G3/4" UNI-EN-ISO 228

028

- Temperature range 5÷80 °C
- Max. operating pressure 8 Bar

Manifold kit can be inserted in walls constructed in 8 cm box, plastered.
Flow meter supply indicator on each supply way.
Use Euroconus fittings with G3/4" thread (see page 181) for pipe connection.
Composition that can be used in combination with mixing units.

Warning: branch pipe fittings tightened to max torque of 30Nm.

1410



Polymer compact manifold kit
Kit collecteurs compacts en polymère
Комплект для компактных коллекторов из полимера
Kit colectoare compacte din polimeri
Kit colectores compactos de polímero
Bausatz Sammelbehälter kompakt aus Polymer

Code	Size	Ways	Pack	Carton
1410.06.70	1"	2+2	1	1
1411.06.70	1"	3+3	1	1
1412.06.70	1"	4+4	1	1
1413.06.70	1"	5+5	1	1
1414.06.70	1"	6+6	1	1
1415.06.70	1"	7+7	1	1
1416.06.70	1"	8+8	1	1
1417.06.70	1"	9+9	1	1
1418.06.70	1"	10+10	1	1
1419.06.70	1"	11+11	1	1
1420.06.70	1"	12+12	1	1
1420.13.70	1"	13+13	1	1

Compact polymer manifolds kit.

Each kit contains:
n° 1 multi-way manifold unit complete with flow meters with lockshield and flow indicator function;
n° 1 multi-way manifold unit complete with valves with thermostatic option with hand wheel;
1 pair of plastic brackets for fixing manifolds;
n° 2 thermometers 0÷80 °C;
n° 2 union fittings;
n° 1 3/8" automatic vent valve;
n° 1 adjustable by-pass valve complete with connections for system filling.

Centre distance between connections via distribution manifolds 50 mm - threading EUROCONUS G3/4" UNI-EN-ISO 228

028

- Temperature range 5÷80 °C
- Max. operating pressure 8 Bar

Manifold kit can be inserted in walls constructed in 8 cm box, plastered.
Flow rate indicator flow meter on each supply way, by-pass valve, automatic air vent valve. Loose packaged components.
Use Euroconus fittings with G3/4" thread (see page 181) for pipe connection.
Composition that can be used in combination with mixing units.

Warning: branch pipe fittings tightened to max torque of 30Nm.

1410



Polymer compact manifold kit
Kit collecteurs compacts en polymère
Комплект для компактных коллекторов из полимера
Kit colectoare compacte din polimeri
Kit colectores compactos de polímero
Bausatz Sammelbehälter kompakt aus Polymer

Code	Size	Ways	Pack	Carton
1410.06.20	1″	2+2	1	1
1411.06.20	1″	3+3	1	1
1412.06.20	1″	4+4	1	1
1413.06.20	1″	5+5	1	1
1414.06.20	1″	6+6	1	1
1415.06.20	1″	7+7	1	1
1416.06.20	1″	8+8	1	1
1417.06.20	1″	9+9	1	1
1418.06.20	1″	10+10	1	1
1419.06.20	1″	11+11	1	1
1420.06.20	1″	12+12	1	1
1420.13.20	1″	13+13	1	1
1420.14.20	1″	14+14	1	1

Compact polymer manifolds kit.

Each kit contains:
n° 1 multi-way manifold unit complete with flow meters with lockshield and flow indicator function;
n° 1 multi-way manifold unit complete with valves with thermostatic option with hand wheel;
1 pair of plastic brackets for fixing manifolds;
n° 2 1" ball valves with built-in thermometer 0÷80 °C;
n° 2 union fittings;
1 x 1″ air / water automatic discharge terminal unit;
n° 1 manual 1" air / water discharge terminal unit.

Centre distance between connections via distribution manifolds 50 mm - threading EUROCONUS G3/4″ UNI-EN-ISO 228

028

- Temperature range 5÷80 °C
- Max. operating pressure 8 Bar

Manifold kit can be inserted in walls constructed in 8 cm box, plastered. Flow rate indicator flow meters on each supply way, air vent valves. Loose packaged components.
Use Euroconus fittings with G3/4″ thread (see page 181) for pipe connection.

Warning: branch pipe fittings tightened to max torque of 30Nm.

1002



Kit for anti-condensation polymer compact manifolds
Kits collecteurs modulaires en polymère anti-condensation
Модульные коллекторы из полимера против конденсата
Kit colectoare modulare din polimeri anticondens
Kit de colectores modulares de polímero anticondensación
Bausatz modulare Sammelbehälter aus kondensfestem Polymer

Code	Size	Ways	Pack	Carton
1002.06.10	1″	2+2	1	1
1003.06.10	1″	3+3	1	1
1004.06.10	1″	4+4	1	1
1005.06.10	1″	5+5	1	1
1006.06.10	1″	6+6	1	1
1007.06.10	1″	7+7	1	1
1008.06.10	1″	8+8	1	1
1009.06.10	1″	9+9	1	1
1010.06.10	1″	10+10	1	1
1011.06.10	1″	11+11	1	1
1012.06.10	1″	12+12	1	1
1013.06.10	1″	13+13	1	1

Kit for modular manifolds in anti-condensation polymer

Each kit consists of: (pre-assembled components)
n° 1 multi-way manifold unit complete with flow meters with lockshield and flow indicator function;
n° 1 multi-way manifold unit complete with valves with thermostatic option with hand wheel;
1 pair of plastic brackets for fixing manifolds.

- Temperature range 5÷80 °C
- Max. operating pressure 8 Bar

028

Supply indicator flow meters on each supply way.
Manifolds with internal cavities with thermal insulation and anti-condensation functions.
Use Euroconus fittings with G3/4″ thread (see page 181) for pipe connection.

Warning: branch pipe fittings tightened to max torque of 30Nm.

Centre distance between connections via distribution manifolds 50 mm - threading EUROCONUS G3/4″ UNI-EN-ISO 228
Patent No. 262005

1002



Kit for anti-condensation polymer compact manifolds
Kits collecteurs modulaires en polymère anti-condensation
Модульные коллекторы из полимера против конденсата
Kit colectoare modulare din polimeri anticondens
Kit de colectores modulares de polímero anticondensación
Bausatz modulare Sammelbehälter aus kondensfestem Polymer

Code	Size	Ways	Pack	Carton
1002.06.40	1″	2+2	1	1
1003.06.40	1″	3+3	1	1
1004.06.40	1″	4+4	1	1
1005.06.40	1″	5+5	1	1
1006.06.40	1″	6+6	1	1
1007.06.40	1″	7+7	1	1
1008.06.40	1″	8+8	1	1
1009.06.40	1″	9+9	1	1
1010.06.40	1″	10+10	1	1
1011.06.40	1″	11+11	1	1
1012.06.40	1″	12+12	1	1
1013.06.40	1″	13+13	1	1

Kit for modular manifolds in anti-condensation polymer

Each kit contains:
n° 1 multi-way manifold unit complete with flow meters with lockshield and flow indicator function;
n° 1 multi-way manifold unit complete with valves with thermostatic option with hand wheel;
1 pair of plastic brackets for fixing manifolds;
n° 2 1" ball valves with built-in thermometer 0÷80 °C;
n° 2 union fittings;
n° 1 automatic 1" air / water discharge terminal unit.
n° 1 manual 1" air / water discharge terminal unit.

- Temperature range 5÷80 °C
- Max. operating pressure 8 Bar

028

Supply indicator flow meters on each supply way.
Manifolds with internal cavities with thermal insulation and anti-condensation functions.
Use Euroconus fittings with G3/4″ thread (see page 181) for pipe connection.

Warning: branch pipe fittings tightened to max torque of 30Nm.

Centre distance between connections via distribution manifolds 50 mm - threading EUROCONUS G3/4″ UNI-EN-ISO 228
Patent No. 262005

1002



Kit for anti-condensation polymer compact manifolds
Kits collecteurs modulaires en polymère anti-condensation
Модульные коллекторы из полимера против конденсата
Kit colectoare modulare din polimeri anticondens
Kit de colectores modulares de polímero anticondensación
Bausatz modulare Sammelbehälter aus kondensfestem Polymer

Code	Size	Ways	Pack	Carton
1002.06.50	1″	2+2	1	1
1003.06.50	1″	3+3	1	1
1004.06.50	1″	4+4	1	1
1005.06.50	1″	5+5	1	1
1006.06.50	1″	6+6	1	1
1007.06.50	1″	7+7	1	1
1008.06.50	1″	8+8	1	1
1009.06.50	1″	9+9	1	1
1010.06.50	1″	10+10	1	1
1011.06.50	1″	11+11	1	1
1012.06.50	1″	12+12	1	1
1013.06.50	1″	13+13	1	1

Centre distance between connections via distribution manifolds 50 mm - threading EUROCONUS G3/4″ UNI-EN-ISO 228
Patent No. 262005

Kit for modular manifolds in anti-condensation polymer

Each kit consists of: (pre-assembled components)
n° 1 multi-way manifold unit complete with flow meters with lockshield and flow indicator function;
n° 1 multi-way manifold unit complete with valves with thermostatic option with hand wheel;
1 pair of plastic brackets for fixing manifolds;
n° 2 1" ball valves with built-in thermometer 0÷80 °C;
n° 2 union fittings;
n° 1 3/8″ automatic vent valve;
n° 1 adjustable by-pass valve complete with connections for system filling.

- Temperature range 5÷80 °C
- Max. operating pressure 8 Bar

Supply indicator flow meters on each supply way.
Manifolds with internal cavities with thermal insulation and anti-condensation functions.
Use Euroconus fittings with G3/4″ thread (see page 181) for pipe connection.
Insulation-ready By-pass Unit (see page 55)

Warning: branch pipe fittings tightened to max torque of 30Nm.

028

2606



Flush-mount manifold box, metal structure and plastic cover
Boîte à encastrer pour collecteurs, structure en métal et couvercle en plastique
Металлическая встраиваемая коробка для коллекторов, с пластмассовой крышкой
Casetă cu încastrare pentru colectoare, structură din metal şi capac din plastic
Caja empotrada para colectores, estructura de metal y tapa de plástico
Einbau-Kassette für Sammelbehälter, Konstruktion aus Metall und Abdeckung aus Kunststoff

Code	Dimensions LxH (mm)	Pack	Carton
2606.40.02	400x500	1	1
2606.60.02	600x500	1	1
2606.80.02	800x500	1	1
2606.10.02	1000x500	1	1

Adjustable depth 80-130 mm (overall depth 80-150 mm if considering the useful stroke of the screws used for fixing the plastic cover to the metal structure).

Pair of floor-anchoring feet
Paire de pieds pour fixation au sol du coffret
Пара ножек для крепления монтажного шкафа к полу
Pereche de picioruşe pentru fixarea la sol a casetei
Par de pies para la fijación de la caja al suelo
Fußpaarzur Befestigung des Kastens am Boden

Code	Pack	Carton
2948.00.02	1	1

Maximum adjustable height 100 mm

Box1

Manifold containment and inspection box, for flush-mount installation.

Made of galvanized steel with bottom and side locks, complete with universal moveable guides for bracket mounting and removable paintable plastic lid. Feet for fastening to the floor, ordered separately.

027

It can be inserted in walls made with 8 cm bricks, plastered on both sides.
Paintable plastic cover.
Telescopic chassis/frame and cover.
With actuators installed on valves with thermostatic option, provide extended cover clamping screws code 2155.005
Execution with movable guides for the free positioning of the components inside the box.
UNIVERSAL case, suitable for housing 1" manifolds Kit series 608 - 2028 - 1410 - 1002 - 3202 - 3615
Feet for fastening to the floor, ordered separately as accessories.

1972



Plastic box for manifolds, flush-mount installation
Boîte en plastique pour collecteurs, montage à encastrement
Пластиковая коробка для коллекторов, встраиваемая в стену установка
Casetă din plastic pentru colectoare, montare prin încastrare
Caja de plástico para colectores, montaje empotrado
Kunststoffkassette für Sammelbehälter, Einbau-Montage

Code	Dimensions LxH (mm)	Pack	Carton
1972.55.00	550x450	1	1
1972.70.00	700x450	5	1
1972.85.00	850x450	5	1

adjustable depth 80÷100 mm

Quickbox

Plastic manifold containment and inspection box, for flush-mount installation.

Plastic structure with bottom and side closures, complete with removable cover and manifold tube clips. Independent collars running lengthwise inside the guides.

027

It can be inserted in walls made with 8 cm bricks, plastered on both sides.
Plastic box. Paintable cover
Suitable for housing 1" manifolds Kit SERIES 608 - 2028 - 1410
Box not suitable to house compositions with motorised zone valve.

3796

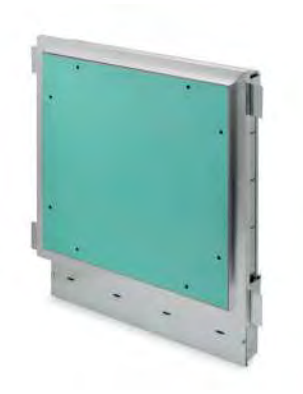

Flush-to-wall case
Boîte au ras du mur
Коробка вровень со стеной
Casetă de perete
Caja a ras de pared
Wandbündige Kassette

Code	Dimensions LxH (mm)	Pack	Carton
3796.40.02	400x600	1	1
3796.60.02	600x600	1	1
3796.85.02	850x600	1	1
3796.10.02	1000x600	1	1

Adjustable depth 69-129 mm

Flush-to-wall case.

Metal case with plasterboard cover
Telescopic bottom 69-129 mm

NEW

027

Suitable for all RBM Kilma 1" manifolds.
Suitable for mounting in plasterboard and masonry walls.

MATCHING CHART 1" MANIFOLDS / HOUSING BOXES

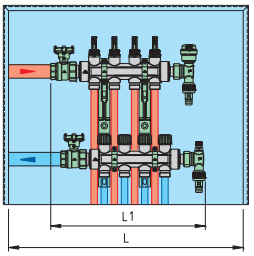

POLYMER MANIFOLDS WITH AIR VENTS **1410 series**

2	3	4	5	6	7	8	9	10	11	12	13	14
L1 (mm) 285	L1 (mm) 335	L1 (mm) 385	L1 (mm) 435	L1 (mm) 485	L1 (mm) 535	L1 (mm) 585	L1 (mm) 635	L1 (mm) 685	L1 (mm) 795	L1 (mm) 845	L1 (mm) 895	L1 (mm) 945
L=400 Code **2606.40.02**		L=600 Code **2606.60.02**			L=800 Code **2606.80.02**				L=1000 Code **2606.10.02**			
L=550 Code **1972.55.00***					L=700 Code **1972.70.00***			L=850 Code **1972.85.00***	QUICKBOX NOT AVAILABLE			

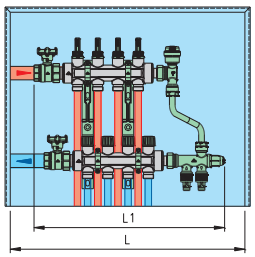

POLYMER MANIFOLDS WITH BY-PASS **1410 series**

2	3	4	5	6	7	8	9	10	11	12	13
L1 (mm) 370	L1 (mm) 420	L1 (mm) 470	L1 (mm) 520	L1 (mm) 570	L1 (mm) 620	L1 (mm) 670	L1 (mm) 720	L1 (mm) 770	L1 (mm) 880	L1 (mm) 930	L1 (mm) 980
L=600 Code **2606.60.02**				L=800 Code **2606.80.02**				L=1000 Code **2606.10.02**			
L=550 Code **1972.55.00***			L=700 Code **1972.70.00***			L=850 Code **1972.85.00***		QUICKBOX NOT AVAILABLE			

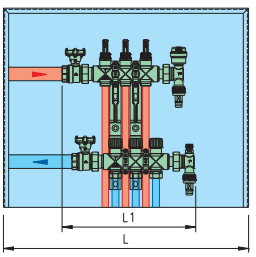

BRASS MANIFOLDS WITH AIR VENTS **608 - 2028 series**

2	3	4	5	6	7	8	9	10	11	12	13	14
L1 (mm) 280	L1 (mm) 330	L1 (mm) 380	L1 (mm) 430	L1 (mm) 480	L1 (mm) 530	L1 (mm) 580	L1 (mm) 630	L1 (mm) 680	L1 (mm) 745	L1 (mm) 795	L1 (mm) 845	L1 (mm) 895
L=400 Code **2606.40.02**		L=600 Code **2606.60.02**			L=800 Code **2606.80.02**				L=1000 Code **2606.10.02**			
L=550 Code **1972.55.00***					L=700 Code **1972.70.00***			L=850 Code **1972.85.00***	QUICKBOX NOT AVAILABLE			

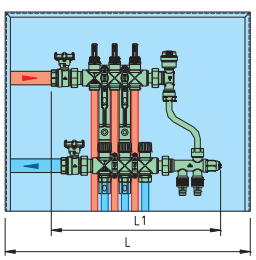

BRASS MANIFOLDS WITH BY-PASS **608 - 2028 series**

2	3	4	5	6	7	8	9	10	11	12	13
L1 (mm) 365	L1 (mm) 415	L1 (mm) 465	L1 (mm) 515	L1 (mm) 565	L1 (mm) 615	L1 (mm) 665	L1 (mm) 715	L1 (mm) 765	L1 (mm) 830	L1 (mm) 880	L1 (mm) 930
L=600 Code **2606.60.02**				L=800 Code **2606.80.02**				L=1000 Code **2606.10.02**			
L=550 Code **1972.55.00***			L=700 Code **1972.70.00***			L=850 Code **1972.85.00***		QUICKBOX NOT AVAILABLE			

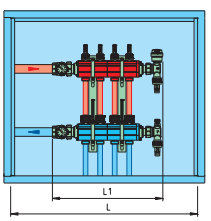

POLYMER ANTI CONDENSATION MANIFOLDS WITH AIR VENTS **1002 series**

2	3	4	5	6	7	8	9	10	11	12	13
L1 (mm) 285	L1 (mm) 335	L1 (mm) 385	L1 (mm) 435	L1 (mm) 485	L1 (mm) 535	L1 (mm) 585	L1 (mm) 635	L1 (mm) 685	L1 (mm) 735	L1 (mm) 800	L1 (mm) 850
L=400 Code **2606.40.02**	L=600 Code **2606.60.02**				L=800 Code **2606.80.02**				L=1000 Code **2606.10.02**		

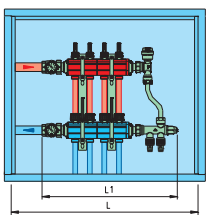

POLYMER ANTI CONDENSATION MANIFOLDS WITH BY-PASS **1002 series**

2	3	4	5	6	7	8	9	10	11	12	13
L1 (mm) 365	L1 (mm) 415	L1 (mm) 465	L1 (mm) 515	L1 (mm) 565	L1 (mm) 615	L1 (mm) 665	L1 (mm) 715	L1 (mm) 765	L1 (mm) 815	L1 (mm) 880	L1 (mm) 930
L=600 Code **2606.60.02**				L=800 Code **2606.80.02**				L=1000 Code **2606.10.02**			

* For housing in the Quickbox box you must use the dedicated brackets.

1349

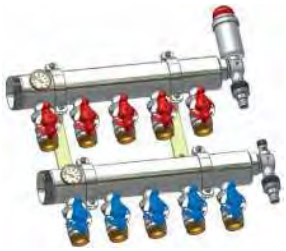

Kilma Big
2" manifolds kit.

Each kit consists of: (pre-assembled pieces)
n° 2 Manifolds (composition based on request)
n° 2 metal clamping brackets with relative clamping screws and vibration-damping supports.
Ball shut-off valves for each distribution way.
n° 2 0÷80 °C thermometers for delivery and return temperature control.
n° 1 Air vent valve
n° 1 Manual air discharge, system loading unit.

Use fittings with G1" thread (see page 281) for pipe connection.

2" manifolds kit
Kit collecteurs de 2"
Комплект коллекторов 2"
Kit colectoare de 2"
Kit de colectores de 2"
Bausatz Sammelbehälter 2"

Code	Size	Ways	Pack	Carton
1349.09.00	2"	5+5	1	1
1350.09.00	2"	6+6	1	1
1351.09.00	2"	7+7	1	1
1352.09.00	2"	8+8	1	1
1353.09.00	2"	9+9	1	1
1354.09.00	2"	10+10	1	1
1355.09.00	2"	11+11	1	1
1356.09.00	2"	12+12	1	1
1357.09.00	2"	13+13	1	1
1358.09.00	2"	14+14	1	1
1359.09.00	2"	15+15	1	1

Distribution way connections, centre distance 70 mm - G 1"M thread

028

1360



Polyethylene pipe fitting.

1" F connection (UNI-EN-ISO 228)

This connection can be used in combination with Kilma Big Acciaio Manifold Kit, SERIES 1349

Polyethylene pipe fitting
Raccord pour tube polyéthylène
Фитинг для полиэтиленовых труб
Racord pentru conductă de polietilenă
Adaptador Standard RBM para tubo de polietileno
Anschlüsse für Polyethylenrohr

Code	Size	Pack	Carton
1360.00.10	20x2	10	40
1360.00.30	25x2,3	10	40

Size: Outside Ø x pipe thickness

037

898



Containment box for manifold inspection, wall mounted.

Made of painted steel sheet with bottom and side closures, complete with guides for manifold fixing, lid with closure lock

- Wall-installation (not flush-mount) for indoors.
- Height H adjustable with feet (730÷870 mm).
- Depth 235 mm.

Box for manifolds, wall installation
Boîte pour collecteurs, montage mural
Коробка для коллекторов, настенный монтаж
Casetă pentru colectoare, montare pe perete
Caja para colectores, montaje en pared
Kassette für Sammelbehälter, Wandmontage

Code	Length (mm)	Pack	Carton
898.60.02	600	1	1
898.10.02	1000	1	1
898.15.02	1500	1	1

Depth 235 mm

027

2" STEEL MANIFOLDS 1349 SERIES

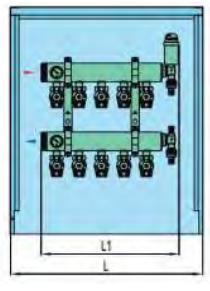

5	6	7	8	9	10	11	12	13	14	15
L1 (mm) 430	L1 (mm) 500	L1 (mm) 570	L1 (mm) 640	L1 (mm) 710	L1 (mm) 780	L1 (mm) 850	L1 (mm) 920	L1 (mm) 990	L1 (mm) 1060	L1 (mm) 1130
L=600 Code **898.60.02**		L=1000 Code **898.10.02**						L=1500 Code **898.15.02**		

3691

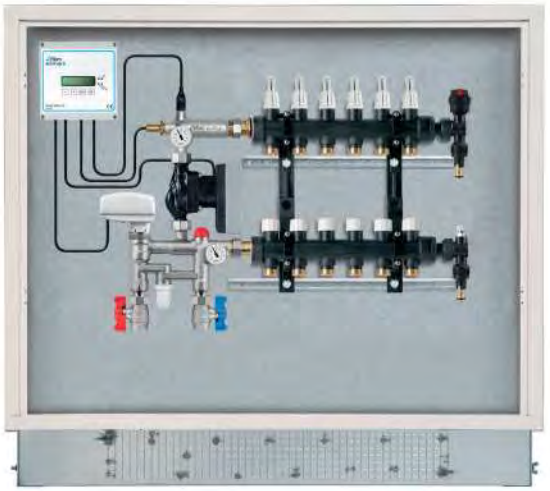

Kilma Basic2

Code	Size	Ways	Width (mm)	Height (mm)	Pack	Carton
3691.02.60	1″	2+2	800	700÷820	1	1
3691.03.60	1″	3+3	800	700÷820	1	1
3691.04.60	1″	4+4	800	700÷820	1	1
3691.05.60	1″	5+5	800	700÷820	1	1
3691.06.60	1″	6+6	800	700÷820	1	1
3691.07.60	1″	7+7	1000	700÷820	1	1
3691.08.60	1″	8+8	1000	700÷820	1	1
3691.09.60	1″	9+9	1000	700÷820	1	1
3691.10.60	1″	10+10	1000	700÷820	1	1
3691.11.60	1″	11+11	1200	700÷820	1	1
3691.12.60	1″	12+12	1200	700÷820	1	1
3691.13.60	1″	13+13	1200	700÷820	1	1
3691.14.60	1″	14+14	1200	700÷820	1	1

high performance adjustable flow pump EEI<0.23 - ERP 622/2012
Box depth 110 ÷ 160 mm

Guscio di coibentazione

Codice	Conf.	Imballo
3705.00.02*	1	1

** Specific insulation casing for mixing valve, circulator and well*

Kilma Basic2
"Kilma Basic2" distribution module in kit

Distribution module pre-assembled in wall flush mounted kit suitable for hydronic heating and cooling circuits.

The module is supplied with Kilma EVO2 HC internal regulator.
Insulation casing, of the brass parts, not included.

- Centre distance between attachments on the plant side 111 mm.
- Centre distance of connections on the diverter line of the low temperature manifold 50 mm, Euroconus G 3/4″ threaded connections.

043

External temperature probe available, code 3502.00.12
The case size enables installation of the Bypass unit code 910.06.00 (except for 14-branch composition).

3691



Kilma Basic2 A.T.

Code	Size	Ways	Width (mm)	Height (mm)	Pack	Carton
3691.02.70	1"	2+2	800	700÷820	1	1
3691.03.70	1"	3+3	800	700÷820	1	1
3691.04.70	1"	4+4	800	700÷820	1	1
3691.05.70	1"	5+5	800	700÷820	1	1
3691.06.70	1"	6+6	800	700÷820	1	1
3691.07.70	1"	7+7	1000	700÷820	1	1
3691.08.70	1"	8+8	1000	700÷820	1	1
3691.09.70	1"	9+9	1000	700÷820	1	1
3691.10.70	1"	10+10	1000	700÷820	1	1
3691.11.70	1"	11+11	1200	700÷820	1	1
3691.12.70	1"	12+12	1200	700÷820	1	1
3691.13.70	1"	13+13	1200	700÷820	1	1
3691.14.70	1"	14+14	1200	700÷820	1	1

high performance adjustable flow pump EEI<0.23 - ERP 622/2012
Box depth 110 ÷ 160 mm

Guscio di coibentazione

Codice	Conf.	Imballo
3705.00.02*	1	1
3705.00.12**	1	1

** Specific insulation casing for mixing valve, circulator and well*
*** Specific insulation casing for H.T. manifold.*

Kilma Basic2 A.T.
"Kilma Basic2 H.T." distribution module in kit

Distribution module pre-assembled in wall flush mounted kit suitable for hydronic heating and cooling circuits.

The module is supplied with Kilma Basic RM internal regulator.
H.T. manifold thermostatically controlled.
Insulation casing, of the brass parts, not included.

- Centre distance between attachments on the plant side 90 mm.
- Centre distance of connections on the diverter line of the low temperature manifold 50 mm, Euroconus G 3/4" threaded connections.
- Centre distance of connections on the diverter line of the high temperature manifold 45 mm, Euroconus G 3/4" threaded connections.

043

External temperature probe available, code 3502.00.12
The case size enables installation of the Bypass unit code 910.06.00 (except for 14-branch composition).

Tree Clean

Ecologico · Ecologique · Ecological

RBM Kilma

ECOLOGICAL ADDITIVE FOR THE TREATMENT OF HEATING SYSTEMS

+ CLEANER + INHIBITOR + PASSIVATOR

Untreated heating circuits can, in the long run, be clogged by sludge deposited in the system and altered by the presence of gas.

Tree Clean, thanks to its complexing and dispersing properties, breaks up this sludge and, by forming a film, prevents its reappearance and the formation of electrochemical cells.

Tree Clean is an effective product on all metals. It is compatible with any kind of plastic and rubber commonly used in heating systems.
Its formulation based on natural polymers respects the environment.
The product can be left permanently in the system, drained and rinsed at a later stage.
After use, it is not necessary to treat the system, since **Tree Clean** already contains a corrosion inhibitor.



- **Ecological:** tannin-based;
- **Passivator:** adheres to the sides of the surfaces to be treated, creating a thin protective film that prevents the corrosion reaction;
- **Anti-corrosion inhibitor;**
- **Restorer:** removes impurities and sludge. Contributes to reducing bacterial proliferation in heating systems;
- Prevents noise in the boiler, the formation of hydrogen, corrosion and limescale deposits;
- Effective on all metals and compatible with any kind of plastic and rubber commonly used in heating systems;
- **Guarantees maximum efficiency** of the system;
- **Neutral pH:** ensures safe use of the product.

306



Thermo-electrically controlled servo motor for valve with thermostatic option, complete with valve body clamping ring nut and electric power cable.

Normally closed valve position when power missing.

- Power supply 24/230 V
- Consumption 2.5W
- Frequency 50/60 Hz
- IP54 protection rating
- Operating temperature -5 ÷ +50 °C
- 4 mm stroke
- Switch contact rating (0.5A) 1 A (if any)

CE

Servo control that can be matched with SERIES 608 - 2028 - 1410 - 1002 - 279 manifolds with a 50 mm centre distance, and Kilma-Zone SERIES 3615 - 3616 manifolds

Thermo-electrically controlled actuator
Servomoteur à commande électrothermique
Электротермический сервопривод
Servomotor cu comandă electrotermică
Cabezal electrotérmico normalmente cerrado para válvulas termostatizables
Servomotor mit elektrothermischer Steuerung

Code	Power supply	Pack	Carton
306.00.02	230V AC	1	50
306.00.12	24V AC	1	50

Version without auxiliary microswitch (2 wires)

Thermo-electrically controlled actuator with auxiliary microswitch
Servomoteur à commande électrothermique avec microrupteur auxiliaire
Электротермический сервопривод с вспомогательным микропереключателем
Servomotor cu comandă electrotermică, cu microîntrerupător auxiliar
Cabezal electrotérmico normalmente cerrado con microinterruptor, para válvula termostatizable y válvula de zona compacta
Servomotor mit elektrothermischer Steuerung mit Hilfmikroschalter

Code	Power supply	Pack	Carton
306.00.42	230V AC	1	50
306.00.52	24V AC	1	50

Version supplied with auxiliary microswitch (4 wires)

015

3189



Thermo-electrically controlled servo motor for valve with thermostatic option, complete with valve body clamping ring nut and electric power cable.

Normally closed position when there is no power.

- Power supply 24/230 V
- Consumption 1.2W
- IP54 protection rating
- Operating temperature 0 ÷ +60 °C
- 5 mm stroke
- Cable length 1 m

CE

Servo control to be matched with modular brass SERIES 3202 manifolds with a 37 mm centre distance.
Servo control with a first-open feature to make installation easier. See the instruction manual for details.

Thermo-electrically controlled actuator
Servomoteur à commande électrothermique
Электротермический сервопривод
Servomotor cu comandă electrotermică
Cabezal electrotérmico normalmente cerrado para válvulas termostatizables
Servomotor mit elektrothermischer Steuerung

Code	Power supply	Pack	Carton
3189.00.02	230V AC	1	100
3189.00.12	24V AC	1	100

Version without auxiliary microswitch (2 wires)

Thermo-electrically controlled actuator with auxiliary microswitch
Servomoteur à commande électrothermique avec microrupteur auxiliaire
Электротермический сервопривод с вспомогательным микропереключателем
Servomotor cu comandă electrotermică, cu microîntrerupător auxiliar
Cabezal electrotérmico normalmente cerrado con microinterruptor, para válvula termostatizable y válvula de zona compacta
Servomotor mit elektrothermischer Steuerung mit Hilfmikroschalter

Code	Power supply	Pack	Carton
3189.00.42	230V AC	1	100
3189.00.52	24V AC	1	100

Version supplied with auxiliary microswitch (4 wires)

015

3609



KILMA TREE CLEAN
"Kilma Tree Clean" additive.

Cleaner - Inhibitor - Passivator.

Recommended dose: A 1 kg package can process 100 litres of water.
Ecological: tannin-based;
Passivator: adheres to the sides of the surfaces to be treated, creating a thin protective film that prevents the corrosion reaction;
Anti-corrosion inhibitor;
Restorer: removes impurities and sludge. Contributes to reducing bacterial proliferation in heating systems;
Prevents noise in the boiler, the formation of hydrogen, corrosion and limescale deposits;
Effective on all metals and compatible with any kind of plastic and rubber commonly used in heating systems;
Guarantees maximum efficiency of the system;
neutral pH: ensures safe use of the product.

Cleaner - Inhibitor - Passivator
Nettoyeur - Inhibiteur - Passivant
Очиститель - Ингибитор - Пастеризатор
Produs de curățare - Inhibitor - Pasivant
Limpiador - Inhibidor - Pasivante
Reiniger - Inhibitor - Passivierungsmittel

Code	Weight (kg)	Pack	Carton
3609.00.02	1	1	15

037

217



Polyethylene pipe fitting.

Euroconus G3/4" connection (UNI-EN-ISO 228)

KOMO certified diameter 16x2 – 17x2 and 20x2 fittings available. Contact our sales department for the ordering codes.

Polyethylene pipe fitting
Raccord pour tube polyéthylène
Фитинг для полиэтиленовых труб
Racord pentru conductă de polietilenă
Adaptador Standard RBM para tubo de polietileno
Anschlüsse für Polyethylenrohr

Code	Size	Size	Pack	Carton
217.16.00	16x2	G 3/4" 16 EK	10	100
217.17.00	17x2	G 3/4" 17 EK	10	100
217.20.00	20x2	G 3/4" 20 EK	10	100

Size: Outside Ø x pipe thickness

037

224



Compression fitting for multilayer pipe.

Euroconus G3/4" connection (UNI-EN-ISO 228)

CSTB (only ø 16x2 - 20x2 / Certification only valid if used with CSTB certified RBM TITA-fIX pipe). - EN ISO 21003 2/10, 4/6, 5/6 bar

Compression fitting for multilayer pipe
Raccord à visser pour tube multicouche
Обжимной фитинг для многослойной трубы
Racord de strângere pentru tubul multistrat
Racor para apretar para tubo multicapa
Schraubanschluss für Mehrschichtverbundrohr

Code	Size	Size	Pack	Carton
224.16.00	16x2	G 3/4" 16 EK	10	100
224.20.00	20x2	G 3/4" 20 EK	10	100

Size: Outside Ø x pipe thickness

037

361



Compression fitting for annealed copper pipe.

Brass ogive.
Nickel plated brass nut.
Elastomer seal ogive.
Euroconus F G3/4" threaded connection.

- Max operating temperature 95 °C
- Max operating pressure 10 Bar

Chrome plated compression fitting for annealed copper pipe
Embout à visser pour tube en cuivre recuit
Обжимной фитинг для трубы из обожженной меди
Racord de strângere pentru tubul din cupru recopt
Racor para apretar para tubo de cobre recocido
Verbindungsstück zum Festziehen für Rohr aus geglühtem Kupfer

Code	Size	Size	Pack	Carton
361.10.00	Ø 10x	G 3/4" EK	10	100
361.12.00	Ø 12x	G 3/4" EK	10	100
361.14.00	Ø 14x	G 3/4" EK	10	100
361.15.00	Ø 15x	G 3/4" EK	10	100
361.16.00	Ø 16x	G 3/4" EK	10	100
361.18.00	Ø 18x	G 3/4" EK	10	100

029

240



Blind cap for manifold ways.

Nickel brass body.
PTFE seal.
Euroconus F G3/4" threaded connection.

- Max operating temperature 110 °C
- Max operating pressure 10 Bar

Blind cap for manifold branches
Bouchon aveugle pour détachements de collecteurs
Заглушки для патрубков коллекторов
Capac orb pentru conexiunile colectoarelor
Tapón ciego para ramales de colectores
Blindkappe für Unterbrechungen der Sammelbehälter

Code	Size	Pack	Carton
240.05.00	G 3/4" EK	10	40

040

71



Compression fitting for polyethylene pipe.

Brass nut, core and pipe clamping ogive.
Nickel plated nut.
Elastomer seal ring.
Standard RBM threaded F connection.

- Max operating temperature 95 °C
- Max operating pressure 10 Bar

Polyethylene pipe fitting
Raccord pour tube polyéthylène
Фитинг для полиэтиленовых труб
Racord pentru conductă de polietilenă
Adaptador Standard RBM para tubo de polietileno
Anschlüsse für Polyethylenrohr

Code	Size	Size	Pack	Carton
71.10.30	10x1,2	RBM 10	10	100
71.12.00	12x2	RBM 12	10	100
71.14.00	14x2	RBM 14	10	100
71.15.10	15x2	RBM 15	10	100
71.16.00	16x2	RBM 16	10	100
71.17.00	17x2	RBM 17	10	100
71.18.30	18x2	RBM 18	10	100
71.20.10	20x2	RBM 20	10	100

Size: Outside Ø x pipe thickness

029

3597



Compression fitting for polyethylene pipes, specifically designed for 3201 - 3202 - 3615 - 3616 series manifolds.

Brass nut, core and pipe clamping ogive.
Nickel plated nut.
Elastomer seal ring.
Standard RBM threaded F connection.

- Max operating temperature 95 °C
- Max operating pressure 10 Bar

Fitting to be used exclusively with compact modular brass manifolds, centre-to-centre distance 37mm 3201- 3202 - 3615 - 3616 series.

Fitting for polyethylene pipe specifically designed for 3201 - 3202 - 3615 - 3616 series manifolds.
Raccord pour tube polyéthylène spécifique pour collecteurs série 3201 - 3202 - 3615 - 3616
Фитинг для полиэтиленовой трубы, специальный для коллекторов серии 3201 - 3202 - 3615 - 3616
Racord pentru tub din polietilenă specific pentru colectoare seria 3201 - 3202 - 3615 - 3616
Empalme para tubo de polietileno específico para colectores de la serie 3201 - 3202 - 3615 - 3616
Anschluss für spezifischen Polyethylenschlauch für Kollektoren der Serie 3201 - 3202 - 3615 - 3616

Code	Size	Size	Pack	Carton
3597.16.00	16x2	RBM 16	10	100
3597.17.00	17x2	RBM 17	10	100

Size: Outside Ø x pipe thickness

037

70



Compression fitting for metal-plastic multilayer pipe.

Compatible with Q-Tec copper pipe in matching sizes. Respect the pipe flaring and gauging conditions.

Brass nut, core and pipe clamping ogive.
Nickel plated nut.
Elastomer seals.
Standard RBM threaded F connection.

- Max operating temperature 95 °C
- Max operating pressure 10 Bar

CSTB (only ø 16x2 - 20x2 / Certification only valid if used with CSTB certified RBM TITA-FIX pipe). - EN ISO 21003 2/10, 4/6, 5/6 bar

Compression fitting for multilayer pipe
Raccord à visser pour tube multicouche
Обжимной фитинг для многослойной трубы
Racord de strângere pentru tubul multistrat
Racor para apretar para tubo multicapa
Schraubanschluss für Mehrschichtverbundrohr

Code	Size	Size	Pack	Carton
70.14.00	14x2	RBM 14	10	100
70.16.00	16x2	RBM 16	10	100
70.17.10	17x2	RBM 17	10	100
70.18.00	18x2	RBM 18	10	100
70.20.00	20x2	RBM 20	10	100

029

1944



Compression fitting for metal-plastic multilayer pipe.

Nickel plated brass nut.
Technopolymer core pipe clamping ogive.
Elastomer seals.
Standard RBM threaded connection.

- Max operating temperature 95 °C
- Max operating pressure 10 Bar

Fitting for metal-plastic multilayer pipe, technopolymer core and ogive
Raccord pour tube multicouche métal-plastique âme et ogive en techno-polymère
Фитинг для многослойной металлопластиковой трубы с сердцевиной и обжимным кольцом из технополимера
Racord pentru tub multistrat metal-plastic, miez și ogivă din polimer tehnologic
Racor para tubo multicapa de metal-plástico núcleo y cápsula de tecnopolímero
Verbindungsstück für mehrschichtiges Metall-Kunststoff-Rohr Kern und Schneidring aus Technopolymer

Code	Size	Size	Pack	Carton
1944.16.00	16x2	RBM	10	100

Size: Outside Ø x pipe thickness
Standard RBM thread W 24.5x19 F

037

41



Compression fitting for annealed copper pipe.

Brass nut and pipe clamping ogive.
Nickel plated nut.
Elastomer seal ogive.
Standard RBM threaded F connection.

- Max operating temperature 95 °C
- Max operating pressure 10 Bar

Copper pipe fitting
Raccord pour tube en cuivre
Фитинг для медных труб
Racord pentru conductă de cupru
Adaptador Standard RBM para tubo de cobre recocido
Anschluss für Kupferrohr

Code	Size	Size	Pack	Carton
41.10.20	Ø 10x	RBM	10	100
41.12.20	Ø 12x	RBM	10	100
41.14.20	Ø 14x	RBM	10	100
41.15.20	Ø 15x	RBM	10	100
41.16.20	Ø 16x	RBM	10	100

029

42



Blind cap for manifold ways.

Nickel brass body.
PTFE seal.
Standard RBM threaded F connection.

- Max operating temperature 110 °C
- Max operating pressure 10 Bar

Blind plug for manifold branches
Bouchon aveugle pour détachements de collecteur
Заглушки для патрубков коллекторов
Capac orb pentru conexiunile colectorului
Tapón ciego para ramales de colector
Blindkappe für Unterbrechungen des Sammelbehälters

Code	Size	Pack	Carton
42.00.00	RBM	10	40

040

311



Y-shaped fitting to split copper, polyethylene and multilayer metal-plastic circuits.

Euroconus G3/4" swivel threaded connection (UNI-EN-ISO 228)
Standard RBM split threaded connections W24.5x19F
Nickel brass body.
Elastomer seals.

- Max operating temperature 100 °C
- Max operating pressure 10 Bar

Y-shaped fitting to split circuits
Raccord en Y pour le dédoublement des circuits
Y-образный патрубок для раздвоения контуров
Racord în Y pentru separarea circuitelor
Racor en Y para desdoblamiento de circuitos
Y-Verbindungsstück zur Verdopplung der Kreise

Code	Size A	Size B	Pack	Carton
311.05.00	G 3/4" EK	RBM	10	10

Allows to split circuits deriving from Euroconus manifolds.
Use fittings with Standard RBM thread (see page 181) for pipe connection.

037

7469



Pressure gauge ø 40. For pressure control.

- Scale 0 - 16 Bar (radial pressure gauge).
- Scale 0 - 10 Bar (axial pressure gauge).

Radial pressure gauge Ø 40
Manomètre radial ø 40
Радиальный манометр ø 40
Manometru radial ø 40
Manómetro radial ø 40
Manometer mit Radialanschluss ø 40

Code	Size	Pack	Carton
746.90.05	1/8"	1	1

Axial pressure gauge Ø 40
Manomètre axial ø 40
Осевой манометр ø 40
Manometru axial ø 40
Manómetro axial ø 40
Manometer mit Axialanschluss ø 40

Code	Size	Pack	Carton
83.20.05	1/8"	1	1

056

208



Flow meter to measure the flow rate of single circuit directly.

Euroconus F threaded swivel connection for connection to manifold.
Euroconus M threaded straight connection for fittings for copper, polyethylene, multilayer pipe.

- Scale 0÷5 l/min
- Reading precision ±10%

Flow meter
Débitmètre
Расходомер потока
Debitmetru
Flujómetro
Durchflussmessgerät

Code	Size	Pack	Carton
208.05.10	G 3/4" EK	10	10

037

8579



MM 1" connection fitting.

Suitable for connecting 2 1" manifolds to reach the number of required junctions.

MM 1" connection fitting
Raccord de connexion MM 1"
Соединительный фитинг НАРУЖ.-НАРУЖ. 1"
Racord de îmbinare Tată-Tată 1"
Racor de conexión MM 1"
Verbindungsstück AG/AG 1"

Code	Size	Pack	Carton
857.90.03	1"	1	10

037

3792



3-way distribution manifold for high temperature, with valves with thermostatic option and regulating lockshields.

Centre distance of connections on the diverter line of the high temperature manifold 45 mm, Euroconus G 3/4" threaded connections.

It cannot be used in combination with polymer mixing units and polymer ECONBLOCK control units (code 15XX.06.XX)
Use Euroconus fittings with G3/4" thread (see page 286) to connect the pipe to the H.T. manifold.

3-way distribution manifold for high temperature, with thermostatic valves and flow-check valves
Collecteur de distribution à 3 voies pour haute température, avec robinets thermostatiques et coudes de réglage
3-ходовой высокотемпературный распределительный коллектор с терморегулирующими клапанами и настроечными клапанами
Colector cu 3 căi de distribuție pentru înaltă temperatură, cu robineți termostatizabili și detentori de reglare
Colector de 3 vías de distribución para alta temperatura, con válvulas controladas termostáticamente y detentores de regulación
3-Wege-Sammelbehälter zur Verteilung für hohe Temperatur mit mit Thermostat ausrüstbaren Ventilen und Rücklaufverschraubung zur Einstellung

Code	Pack	Carton
379.20.03	1	1

037

1152



Thermal insulation for By-Pass unit, made from expanded polyethylene half-bearings with external antiscratch coating.

Half-bearings fixed with double-sided adhesive tape already applied.

- Max temperature application -40°C ÷ +90 °C
- Fire behaviour class I
- Density 33 Kg/m^3

Thermal insulation By-pass unit
Isolation thermique groupe By-pass
Термоизоляция байпасного узла
Izolație termică grup by-pass
Aislamiento térmico grupo Bypass
Wärmeisolierung Einheit Nebenleitung

Code	Pack	Carton
1152.06.00	1	1

043

450



Air and water manual discharge terminal unit.

Air and water manual discharge terminal
Groupe terminal de décharge manuelle, air et eau
Завершающий узел ручного сброса воздуха и воды
Grup terminal de evacuare manual pentru aer și apă
Grupo terminal de purga manual de aire y agua
Abschlusseinheit manueller Luft- und Wasserauslass

Code	Size	Pack	Carton
450.06.00	1"	1	10
450.07.00	1"1/4	1	10

037

216



VasaTre
Automatic air vent valve, degasser, complete with built-in drain valve and Gardena quick connector, pressure gauge connection. Float operation.

Nickel brass body.
Float and lever in PP.
Elastomer seals.
Threaded angle connection M UNI-EN-ISO 228.
Pressure gauge connection F G1/4.

- Max operating pressure 6 Bar
- Max operating temperature 100 °C
- Allowed fluid water and water+glycol 30 %

PRESSIONE MASSIMA DI SCARICO 2,5 bar
IDEALE PER L'INSTALLAZIONE SU COLLETTORI

Automatic air venting valve, degasser
Purgeur automatique d'air, dégazeur
Компактный автоматический воздухоотводчик, дегазатор
Supapă automată de aerisire și degazare
Válvula automática de purga de aire, desgasificador
Automatisches Entlüftungsventil, Entgaser

Code	Size	Model	Pack	Carton
216.06.60	G 1"	VasaTre	3	12
216.07.60	G 1"1/4	VasaTre	3	3

Replaceable float unit.
Cod. 891.00.00 See spare parts pricelist.

019

1095



Brass sealing cap with o-ring for pressurising system with air.

For use only on the air vent valves model Vasa - VasaTre.

Brass sealing cap for pressurising system
Bouchon d'étanchéité en laiton pour la mise sous pression de l'installation
Герметичная латунная пробка для подачи давления в систему
Capac de etanşare din alamă pentru punerea sub presiune a instalaţiei
Tapón de estanquidad de latón para poner a presión la instalación
Dichtstopfen aus Messing, um die Anlage unter Druck zu setzen

Code	Pack	Carton
1095.00.00	1	1

037

793



Joint connection for aligning zone valve.

Threaded line connections MF UNI-EN-ISO 228

For the fitting of the zone valve, when using misaligned brackets cod. 792.06.00 or else 1528.06.00

Joint connection for aligning zone valve
Raccordement de jonction pour l'alignement de la vanne de zone
Соединительный фитинг для выравнивания зонного клапана
Racord de joncţiune pentru alinierea supapei de zonă
Racor de unión para la alineación de la válvula de zona
Anschlussverbindungsstück zur Versorgung des Zonenventils

Code	Size	Pack	Carton
793.06.00	1"	1	1

037

114



Motorised zone valve, 4-way, with 220 mm extension lead.

Threaded connections FF UNI-EN-ISO 228
Complete with adjustable micrometric bypass.

- Centre distance 220÷225 mm
- Misalignment 33 mm

Fitted for servocontrols code 360.00.X0 and 373.00.X0

Motorised zone valve, 4-way, with 220 mm extension lead
Vanne de zone motorisable à 4 voies avec rallonge de 220 mm
4-ходовой зонный клапан (управляется сервоприводом) с удлинителем 220 мм
Ventil de zonă motorizabil cu 4 căi, cu prelungitor de 220 mm
Válvula de zona motorizable de 4 vías, con alargador de 220 mm
Motorisierbares 4 Wege-Zonenventil mit Verlängerung zu 220 mm

Code	Size	Model	Pack	Carton
114.06.30	1"	Zone 4	1	1

037

386



Electromechanical room thermostat
Electromechanical room thermostat. Wall-mounted installation. White. Summer-Winter selector.

Setting range 5÷30 bar
Thermal differential 1.3°C (± 0.2°C)
Wall-mounted.
Size mm (lxhxd.): 83.7x82.9x30.9
Electrical protection rating: IP20

Wall mounted.

Wall mounted
Installation murale
Настенная установка
Montare pe perete
Instalación mural
Wandanbringung

Code	Control	Colour	Pack	Carton
386.00.22	Daily	White	1	1

062

1553



Digital electronic room chronothermostat

Digital electronic room chronothermostat.The temperature can be programmed at any time of day and for each day of the week.Recessed installation. Summer-Winter switchover.

- Power supply: 2 x 1.5V AAA alkaline batteries (not included)
- Mode: summer/winter/off
- Temperature setting: 2÷35°C
- Differential (adjustable): 0.1 ÷ 1 °C
- Operating temperature: 0 ÷ 50 °C
- Antifreeze temperature: 1 ÷ +10 °C, can be disabled
- Storage temperature: -10 ÷ +65 °C
- Operating humidity: 20÷90% RH (non-condensing)
- Electrical protection rating: IP40
- Interchangeable front panel available in two colours: white and anthracite grey (included in the package)

Recessed installation
Installation à encastrement
Встраиваемая в стену установка
Instalare prin încastrare
Instalación empotrada
Einbaumontage

Code	Control	Colour	Pack	Carton
1553.00.02	Weekly	White/Charcoal	1	1

Recessed assembly.
Compatibility with civil series plates
ABB S.p.a.: Chiara, Mylos.
AVE S.p.a.: S44.
BTICINO S.p.a.: Axolute, Light, Light Tech, Living, Livinglight Luna, Matix.
GEWISS S.p.a.: Chorus.
VIMAR S.p.a.: Eikon, Eikon Evo, Idea, Plana, Arke.

062

2295



UMICLIMA

Digital electronic room programmable thermo-humidistat.

- Summer-Winter switchover
- Temperature control
- Relative humidity control
- Dew point temperature control
- On-Off-antifreeze control
- Weekly setting on two tripping thresholds
- Power supply 2 AA 1.5V alkaline batteries
- Temperature setting range 5-30°C (winter) 15-35°C (summer)
- Resolution 0.1 °C
- Accuracy ±0.5°C, ±0.3% RH
- Contact capacity 230V-5A (resistive load)
- Dimensions 119Lx83Hx24W mm

Liquid crystal display and set edit keys, designed to be wall mounted to cover box 503.

Wall mounted
Installation murale
Настенная установка
Montare pe perete
Instalación mural
Wandanbringung

Code	Model	Colour	Pack	Carton
2295.00.02	UMICLIMA-B	White	1	1
2295.00.12	UMICLIMA-N	Charcoal	1	1

Wall mounted.
Suitable for room temperature and relative humidity control. It also enables the safety control of the room dew point temperature.

061

2294



UMIDAY-V ambient humidistat

Ambient humidistat.

- Power supply: 230Vac 50/60 Hz
- Absorption: 4Va (0.5W)
- Output with bistable relay 5(3)A/250Vac
- Setting range: 30÷90% RH
- Minimum time between one switchover and the next: 1 minute
- Operating temperature: 0÷50°C
- Storage temperature: +0-+60°C
- Electrical protection rating: IP40
- Interchangeable front panel available in two colours: white and anthracite grey (included in the package)
- Selector with two positions: off and automatic

CE

Recessed installation
Installation à encastrement
Встраиваемая в стену установка
Instalare prin încastrare
Instalación empotrada
Einbaumontage

Code	Model	Colour	Pack	Carton
2294.00.32	UMIDAY-V	Charcoal	1	1

Flush mount installation in 503 box.
Suitable for room relative humidity control and adjustment.
Compatibility with civil series plates
ABB S.p.a.: Chiara, Mylos.
AVE S.p.a.: S44.
BTICINO S.p.a.: Axolute, Light, Light Tech, Living, Livinglight, Luna, Matix.
GEWISS S.p.a.: Chorus.
VIMAR S.p.a.: Eikon, Eikon Evo, Idea, Plana, Arke

061

3749



Front casing, template and profile kit.

Material: aluminium alloy EN-AW 6060
Finish: RAL9010 white painting

- Radiant extruded profiles: length 4 m

Front casing, template and profile kit.
Kit carter avant, gabarit et profil.
Комплект переднего картера, шаблон и профиль.
Kit carter anterior, șablon și profil.
Kit cárter anterior, plantilla y perfil.
Bausatz vorderes Gehäuse, Schablone und Profil.

Code	Length (mm)	Pack	Carton
3749.04.00	4000	1	1

Patent nr. SM-A-201400095

063

3750



Skirting board kit with three radiant profiles.

Material: aluminium alloy EN-AW 6060
Finish: ENOX black painting

- Radiant extruded profiles: length 3.5 m

Skirting board kit with three radiant profiles
Kit plinthe à 3 profils radiants
Комплект плинтусов из 3 радиаторных профилей
Kit plintă cu 3 profiluri radiante
Kit zócalo de 3 perfiles radiantes
Bausatz Fußleiste mit 3 Heizprofilen

Code	Length (mm)	Pack	Carton
3750.03.00	3500	1	1

Patent nr. SM-A-201400095

063

3751



1-2-3-way manifolds.

Material: Cw617N - nickel-plated

1-2-3-way manifolds
Collecteurs à 1-2-3 voies
1-2-3-ходовые коллекторы
Colectoare cu 1-2-3 căi
Colectores de 1-2-3 vías
1-2-3-Wege Sammelbehälter

Code	Size	Ways	Pack	Carton
3751.01.00	1/2″	1	1	1
3751.02.00	1/2″	2	1	1
3751.03.00	1/2″	3 LH	1	1
3751.03.10	1/2″	3 RH	1	1

Patent nr. SM-A-201400095

063

3760



Wall mount kit (bracket and support).

Wall mount kit (bracket and support)
Kit support mural (étrier et support)
Комплект настенного держателя (скоба и держатель)
Kit suport de perete (consolă și suport)
Kit soporte de pared (estribo y soporte)
Wand-Bausatz (Bügel und Halterung)

Code	Pack	Carton
3761.00.20	1	5

Patent nr. SM-A-201400095

063

3761



End terminal kit (right and left).

NEW

End terminal kit (right and left)
Kit terminaux finaux (droit et gauche)
Комплект концевых терминалов (правый и левый)
Kit terminale finale (dreapta și stânga)
Kit terminales finales (derecho e izquierdo)
Bausatz Endstücke (rechts und links)

Code	Pack	Carton
3761.00.00	1	5

Patent nr. SM-A-201400095

063

3761

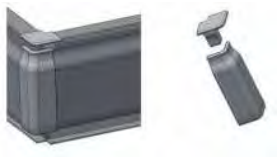

External angle kit (top and bottom).

NEW

External angle kit (top and bottom)
Kit angle externe (partie haute et partie basse)
Комплект наружный уголок (верхняя часть и нижняя часть)
Kit unghi exterior (parte înaltă și parte joasă)
Kit ángulo externo (parte alta y parte baja)
Bausatz Außenwinkel (oberer und unterer Teil)

Code	Pack	Carton
3761.00.10	1	5

Patent nr. SM-A-201400095

063

3761



Internal angle kit (top and bottom).

NEW

Internal angle kit (top and bottom)
Kit angle interne (partie haute et partie basse)
Комплект внутренний уголок (верхняя часть и нижняя часть)
Kit unghi interior (parte înaltă și parte joasă)
Kit ángulo interno (parte alta y parte baja)
Bausatz Innenwinkel (oberer und unterer Teil)

Code	Pack	Carton
3761.00.20	1	5

Patent nr. SM-A-201400095

063

3761



Straight kit (top and bottom).

NEW

Straight kit (top and bottom)
Kit droit (partie haute et partie basse)
Комплект прямолинейный (верхняя часть и нижняя часть)
Kit drept (parte înaltă și parte joasă)
Kit recto (parte alta y parte baja)
Bausatz gerade (oberer und unterer Teil)

Code	Pack	Carton
3761.00.30	1	5

Patent nr. SM-A-201400095

063

3753



Straight fitting for MM/MF radiant profile connection.

Straight fitting for MM radiant profile connection
Raccord droit pour union profil radiant MM
Прямой соединительный фитинг радиаторный профиль НАРУЖ.-НАРУЖ. резьба
Racord drept pentru îmbinarea profilului radiant Tată-Tată
Racor recto para unión perfil radiante MM
Verbindungsstück gerade für Verbindung Heizprofil AG/AG

Code	Pack	Carton
3753.12.00	1	1

Straight fitting for MF radiant profile connection
Raccord droit pour union profil radiant MF
Прямой соединительный фитинг радиаторный профиль НАРУЖ.-ВНУТР. резьба
Racord drept pentru îmbinarea profilului radiant Tată-Mamă
Racor recto para unión perfil radiante MH
Verbindungsstück gerade für Verbindung Heizprofil AG/IG

Code	Pack	Carton
3753.12.10	1	1

063

735



Compression fitting for polyethylene pipe, flat seat.

Nickel brass body.
Elastomer seals.
F G1/2" threaded connection.

- Max operating temperature 110 °C
- Max operating pressure 10 Bar

Fitting for polyethylene pipe, flat seat
Raccord pour tube en polyéthylène logement plat
Фитинг для полиэтиленовых труб плоское седло
Racord pentru conductă din polietilenă locaș plat
Adaptador G1/2" base plana para tubo en polietileno
Anschluss für Polyethylenrohr flacher Sitz

Code	Size A	Size B	Pack	Carton
735.12.00	12x1,1	G 1/2"	10	100
735.16.00	16x1,5	G 1/2"	10	100
735.16.10*	16x2	G 1/2"	10	100
735.16.20	16x2	G 1/2"	10	100

**Can also be used for multilayer polyethylene pipe*
Thread F G 1/2"

Flat seat.

041

812



Press fitting for Tita-fix multilayer pipe.

Multi-clamp fitting.
Compatible with clamps series:
- TH, H, U, B for Ø 14x2;
- TH, H, U, B, F for Ø 16x2 - 18x2 and 20x2;
- TH, H, B for Ø 26x3;
- TH, H for Ø 32x3;

Externally nickel-plated brass body
Elastomer seals
Stainless steel pipe clamping bush
Dielectric pipe clamp cover in PE
Threaded connection UNI-EN-ISO 228
Max operating temperature 95 °C
Max operating pressure 10 Bar

CSTB (only ø 16x2 - 20x2 - 26x3 - 32x3 / Certification applicable only if matched with CSTB certified "RBM TITA-FIX" pipe). - EN ISO 21003 2/10, 4/6, 5/6 bar

Press fitting for multilayer pipe - rotary nut - flat seat gas thread
Raccord à sertir pour tube multicouche - écrou libre - filetage gaz portée plate
Пресс-фитинг для металлопластиковых труб - с накидной гайкой - резьба плоское уплотнение
Racord cu presare pentru conductă multistrat - piuliță rotantă - filet gaz garnitură plată
Racor Press Fitting Gas recto con tuerca loca para junta plana para tubo multicapa gas
Steckanschluss für Mehrschichtverbundrohr Überwurfmutter - Gasgewinde flach dichtend

Code	Size A	Size B	Pack	Carton
812.14.10	14x2	3/8" F	10	200
812.14.20	14x2	1/2" F	10	200
812.16.10	16x2	3/8" F	10	200
812.16.20	16x2	1/2" F	10	200
812.16.30	16x2	3/4" F	10	160
812.18.30	18x2	3/4" F	10	160
812.20.20	20x2	1/2" F	10	160
812.20.30	20x2	3/4" F	10	160
812.26.30	26x3	3/4" F	10	100
812.26.40	26x3	1" F	10	100
812.26.50	26x3	1"1/4 F	1	1
812.32.50	32x3	1"1/4 F	10	80

Size A: Outside Ø x pipe thickness

041

140



Blind side cap.

Nickel brass body.
PTFE seals.
F G1/2" threaded connection.

- Max operating temperature 110 °C
- Max operating pressure 10 Bar

Blind side cap
Bouchon latéral aveugle
Боковая глухая заглушка
Bușon lateral orb
Tapón Hembra para conexión G1/2"
Seitliche Blindkappe

Code	Size B	Pack	Carton
140.04.00	G 1/2"	10	40

Thread F G 1/2"

Flat seat.

041

3754



Perimeter strip.

The perimeter strip must be applied to the wall before installing the cooling/heating system and it prevents dispersing heat to the wall.

Material: hexalometric insulation EPDM

Perimeter strip
Bande de périmètre
Периметральная лента
Bandă perimetrală
Banda perimetral
Perimeter-Band

Code	Height (mm)	Thickness (mm)	Roll (m)	Pack	Carton
3754.00.02	130	2	25	1	1

063

3755

Reflective strip.



063

- Tape RF/BRT

Reflective strip
Bande réfléchissante
Светоотражающая лента
Bandă reflectorizantă
Banda reflectante
Reflektierendes Band

Code	Height (mm)	Thickness (mm)	Roll (m)	Pack	Carton
3755.00.02	50	3	20	1	1

3767

Manual press set for blinding.





063

- Set including:
- press;
- calliper.

Manual press set for blinding
Set presse manuelle pour bridage
Набор ручных обжимных пресс-клещей
Set de presare manuală pentru închidere
Set prensadora manual para cegado
Bausatz manuelle Rohrdruckpresse für Verblendung

Code	Pack	Carton
3767.00.12	1	1

Only calliper for blinding
Seulement mâchoire pour bridage
Только обжимные губки
Numai clemă pentru închidere
Solo mordaza para cegado
Nur Backe für Verblendung

Code	Pack	Carton
3767.00.02	1	1

3767

Battery-operated press set for blinding.





063

- Set including:
- case;
- battery-operated press;
- rechargeable battery;
- battery charger;
- calliper.

Battery-operated press set for blinding
Set presse à batterie pour bridage
Набор обжимных пресс-клещей на батарейках
Set de presare cu baterie pentru închidere
Set prensadora con batería para cegado
Bausatz batteriebetriebene Rohrdruckpresse für Verblendung

Code	Pack	Carton
3767.00.22	1	1

Only calliper for blinding
Seulement mâchoire pour bridage
Только обжимные губки
Numai clemă pentru închidere
Solo mordaza para cegado
Nur Backe für Verblendung

Code	Pack	Carton
3767.00.02	1	1

3767

Flaring tool.



063

Flaring tool
Fraise à évaser
Зенковка
Dispozitiv de frezare
Abocinador
Ansenkvorrichtung

Code	Pack	Carton
3767.00.32	1	1

3750



4-bar false ceiling kit.

Material: aluminium alloy EN-AW 6060
Finish: ENOX black painting

- Radiant extruded profiles: length 3.5 m

False ceiling kit with 4 radiant profiles.
Kit faux plafond à 4 profils radiants
Комплект для фальш-потолков из 4 радиаторных профилей
Kit pentru tavan cu 4 profiluri radiante
Kit falso techo con 4 perfiles radiantes
Bausatz Zwischendecke mit 4 Heizprofilen

Code	Length (mm)	Pack	Carton
3750.04.00	3500	1	1

Patent nr. 102017000025518

3764



Wall mount kit (bracket and support).

Wall mount kit (bracket and support)
Kit support mural (étrier et support)
Комплект настенного держателя (скоба и держатель)
Kit suport de perete (consolă și suport)
Kit soporte de pared (estribo y soporte)
Wand-Bausatz (Bügel und Halterung)

Code	Pack	Carton
3764.00.00	1	10

Patent nr. 102017000025518

3756



Condensate collection duct.

The condensate collection duct is used to convey the condensate naturally falling from the extruded profiles and drain it through a preset slope.

Material: PVC
Duct length: 4m

Condensate collection duct
Conduit de collecte de condensat
Канал для сбора конденсата
Canal de colectare a condensului
Canal de recogida de condensación
Kondensat-Sammelkanal

Code	Length (mm)	Pack	Carton
3756.04.00	4000	10	10
957.40.05	4000	1	1

Patent nr. 102017000025518

3751



4-way manifolds.

Material: Cw617N - nickel-plated

4-way manifolds
Collecteurs à 4 voies
4-ходовые коллекторы
Colectoare cu 4 căi
Colectores de 4 vías
4-Wege Sammelbehälter

Code	Size	Ways	Pack	Carton
3751.04.00	1/2"	4 RH	1	1
3751.04.10	1/2"	4 LH	1	1

Patent nr. 102017000025518

3753



Straight fitting for MM/MF radiant profile connection.

Straight fitting for MM radiant profile connection
Raccord droit pour union profil radiant MM
Прямой соединительный фитинг радиаторный профиль НАРУЖ.-НАРУЖ. резьба
Racord drept pentru îmbinarea profilului radiant Tată-Tată
Racor recto para unión perfil radiante MM
Verbindungsstück gerade für Verbindung Heizprofil AG/AG

Code	Pack	Carton
3753.12.00	1	1

Straight fitting for MF radiant profile connection
Raccord droit pour union profil radiant MF
Прямой соединительный фитинг радиаторный профиль НАРУЖ.-ВНУТР. резьба
Racord drept pentru îmbinarea profilului radiant Tată-Mamă
Racor recto para unión perfil radiante MH
Verbindungsstück gerade für Verbindung Heizprofil AG/IG

Code	Pack	Carton
3753.12.10	1	1

063

3752



Thermal insulation for 4-way manifold consisting of expanded polyethylene half-casings with external antiscratch coating.

Half-bearings fixed with double-sided adhesive tape already applied.

- Max temperature application -40°C ÷ +90 °C
- Fire behaviour class I
- Density 33 Kg/m^3

Thermal insulation for 4-way manifold (right and left)
Isolation thermique pour collecteur à 4 voies (droit et gauche)
Теплоизоляция для 4-ходового коллектора (правая и левая)
Izolație termică pentru colector cu 4 căi (dreapta și stânga)
Aislamiento térmico para colector de 4 vías (derecho e izquierdo)
Wärmeisolierung für 4-Wege-Sammelbehälter (rechts und links)

Code	Pack	Carton
3752.04.00	1	1
3752.04.10	1	1

Patent nr. 102017000025518

3757



Aesthetic cover.

Material: PVC
Cover length: 4m

Aesthetic cover
Couverture esthétique
Украшающее покрытие
Carcasă estetică
Cobertura estética
Ästhetische Abdeckung

Code	Length (mm)	Pack	Carton
3757.04.00	4000	1	1

Patent nr. 102017000025518

3763



Outside corner joint for false ceiling casing.

Outside corner joint for false ceiling casing
Joint angle externe pour carter faux plafond
Соединительный наружный уголок для корпуса фальш-потолков
Îmbinare unghi exterior pentru carter de tavan
Junta de ángulo externo para cárter de falso techo
Fuge Außenwinkel für Zwischendeckenprofil

Code	Pack	Carton
3763.00.20	1	5

Patent nr. SM-A-201400095

063

3763



063

Straight joint for false ceiling casing.

Straight joint for false ceiling casing
Joint droit pour carter faux plafond
Соединительный прямолинейный элемент для корпуса фальш-потолков
Îmbinare dreaptă pentru carter de tavan
Junta recta para cárter de falso techo
Gerade Fuge für Zwischendeckenprofil

Code	Pack	Carton
3763.00.00	1	5

Patent nr. SM-A-201400095

3763



063

Inside corner joint for false ceiling casing

Inside corner joint for false ceiling casing
Joint angle externe pour carter faux plafond.
Соединительный внутренний уголок для корпуса фальш-потолков
Îmbinare de colț interioară pentru carter de tavan.
Junta de ángulo interno para cárter de falso techo.
Fuge Innenwinkel für Zwischendeckenprofil

Code	Pack	Carton
3763.00.10	1	5

Patent nr. SM-A-201400095

735



041

Compression fitting for polyethylene pipe, flat seat.

Nickel brass body.
Elastomer seals.
F G1/2" threaded connection.

- Max operating temperature 110 °C
- Max operating pressure 10 Bar

Fitting for polyethylene pipe, flat seat
Raccord pour tube en polyéthylène logement plat
Фитинг для полиэтиленовых труб плоское седло
Racord pentru conductă din polietilenă locaș plat
Adaptador G1/2" base plana para tubo en polietileno
Anschluss für Polyethylenrohr flacher Sitz

Code	Size A	Size B	Pack	Carton
735.12.00	12x1,1	G 1/2"	10	100
735.16.00	16x1,5	G 1/2"	10	100
735.16.10*	16x2	G 1/2"	10	100
735.16.20	16x2	G 1/2"	10	100

**Can also be used for multilayer polyethylene pipe*
Thread F G 1/2"

Flat seat.

812



Press fitting for Tita-fix multilayer pipe.

Multi-clamp fitting.
Compatible with clamps series:
- TH, H, U, B for Ø 14x2;
- TH, H, U, B, F for Ø 16x2 - 18x2 and 20x2;
- TH, H, B for Ø 26x3;
- TH, H for Ø 32x3;

Externally nickel-plated brass body
Elastomer seals
Stainless steel pipe clamping bush
Dielectric pipe clamp cover in PE
Threaded connection UNI-EN-ISO 228
Max operating temperature 95 °C
Max operating pressure 10 Bar

CSTB (only ø 16x2 - 20x2 - 26x3 - 32x3 / Certification applicable only if matched with CSTB certified "RBM TITA-FIX" pipe). - EN ISO 21003 2/10, 4/6, 5/6 bar

Press fitting for multilayer pipe - rotary nut - flat seat gas thread
Raccord à sertir pour tube multicouche - écrou libre - filetage gaz portée plate
Пресс-фитинг для металлопластиковых труб - с накидной гайкой - резьба плоское уплотнение
Racord cu presare pentru conductă multistrat - piuliță rotantă - filet gaz garnitură plată
Racor Press Fitting Gas recto con tuerca loca para junta plana para tubo multicapa gas
Steckanschluss für Mehrschichtverbundrohr Überwurfmutter - Gasgewinde flach dichtend

Code	Size A	Size B	Pack	Carton
812.14.10	14x2	3/8" F	10	200
812.14.20	14x2	1/2" F	10	200
812.16.10	16x2	3/8" F	10	200
812.16.20	16x2	1/2" F	10	200
812.16.30	16x2	3/4" F	10	160
812.18.30	18x2	3/4" F	10	160
812.20.20	20x2	1/2" F	10	160
812.20.30	20x2	3/4" F	10	160
812.26.30	26x3	3/4" F	10	100
812.26.40	26x3	1" F	10	100
812.26.50	26x3	1"1/4 F	1	1
812.32.50	32x3	1"1/4 F	10	80

Size A: Outside Ø x pipe thickness

041

140



Blind side cap.

Nickel brass body.
PTFE seals.
F G1/2" threaded connection.

- Max operating temperature 110 °C
- Max operating pressure 10 Bar

Blind side cap
Bouchon latéral aveugle
Боковая глухая заглушка
Buşon lateral orb
Tapón Hembra para conexión G1/2"
Seitliche Blindkappe

Code	Size B	Pack	Carton
140.04.00	G 1/2"	10	40

Thread F G 1/2"

Flat seat.

041

3754



Perimeter strip.

The perimeter strip must be applied to the wall before installing the cooling/heating system and it prevents dispersing heat to the wall.

Material: hexalometric insulation EPDM

Perimeter strip
Bande de périmètre
Периметральная лента
Bandă perimetrală
Banda perimetral
Perimeter-Band

Code	Height (mm)	Thickness (mm)	Roll (m)	Pack	Carton
3754.00.02	130	2	25	1	1

063

3767

Manual press set for blinding.





- Set including:
- press;
- calliper.

063

Manual press set for blinding
Set presse manuelle pour bridage
Набор ручных обжимных пресс-клещей
Set de presare manuală pentru închidere
Set prensadora manual para cegado
Bausatz manuelle Rohrdruckpresse für Verblendung

Code	Pack	Carton
3767.00.12	1	1

Only calliper for blinding
Seulement mâchoire pour bridage
Только обжимные губки
Numai clemă pentru închidere
Solo mordaza para cegado
Nur Backe für Verblendung

Code	Pack	Carton
3767.00.02	1	1

3767

Battery-operated press set for blinding.





- Set including:
- case;
- battery-operated press;
- rechargeable battery;
- battery charger;
- calliper.

063

Battery-operated press set for blinding
Set presse à batterie pour bridage
Набор обжимных пресс-клещей на батарейках
Set de presare cu baterie pentru închidere
Set prensadora con batería para cegado
Bausatz batteriebetriebene Rohrdruckpresse für Verblendung

Code	Pack	Carton
3767.00.22	1	1

Only calliper for blinding
Seulement mâchoire pour bridage
Только обжимные губки
Numai clemă pentru închidere
Solo mordaza para cegado
Nur Backe für Verblendung

Code	Pack	Carton
3767.00.02	1	1

3767

Flaring tool.



063

Flaring tool
Fraise à évaser
Зенковка
Dispozitiv de frezare
Abocinador
Ansenkvorrichtung

Code	Pack	Carton
3767.00.32	1	1


RBM
Tita-Fix

HYDROTHERMAL AND GASEOUS FUELS DISTRIBUTION SYSTEM

SYSTÈME DE DISTRIBUTION HYDRO THERMIQUE ET DE COMBUSTIBLES GAZEUX

ГИДРОТЕРМИЧЕСКАЯ РАСПРЕДЕЛИТЕЛЬНАЯ СИСТЕМА И ГАЗООБРАЗНОЕ ТОПЛИВО

SISTEM DE DISTRIBUȚIE HIDROTERMICĂ ȘI DE COMBUSTIBILI GAZOȘI

SISTEMA DE DISTRIBUCIÓN HIDROTÉRMICA Y COMBUSTIBLES GASEOSOS

SYSTEM ZUR HYDROTHERMISCHEN VERSORGUNG UND VERTEILUNG VON GASFÖRMIGEN BRENNSTOFFEN

1. HYDROTHERMAL AND GASEOUS FUELS DISTRIBUTION SYSTEM PAG. 307


RBM
Tita-Fix

HYDROTHERMAL AND GASEOUS FUELS DISTRIBUTION SYSTEM

SYSTÈME DE DISTRIBUTION HYDRO THERMIQUE ET DE COMBUSTIBLES GAZEUX

ГИДРОТЕРМИЧЕСКАЯ РАСПРЕДЕЛИТЕЛЬНАЯ СИСТЕМА И ГАЗООБРАЗНОЕ ТОПЛИВО

SISTEM DE DISTRIBUȚIE HIDROTERMICĂ ȘI DE COMBUSTIBILI GAZOȘI

SISTEMA DE DISTRIBUCIÓN HIDROTÉRMICA Y COMBUSTIBLES GASEOSOS

SYSTEM ZUR HYDROTHERMISCHEN VERSORGUNG UND VERTEILUNG VON GASFÖRMIGEN BRENNSTOFFEN

PE-Xc Multilayer pipe for gas distribution pag. 308



Press fittings for gas multilayer system pag. 309



Gaseous fuels distribution accessories pag. 316



PE-Xc Multilayer pipe for water distribution pag. 318



PE-RT Multilayer pipe for water distribution pag. 320



Press fittings for hydrothermal distribution pag. 322



Compression fittings for hydrothermal distribution pag. 334



Equipment and tools for multilayer system pag. 338



1969



PE-Xc RBM Tita-gas multilayer pipe.

Suitable for the implementation of networks transporting gaseous fuels, according to UNI 7129-1 and UNI 11344
Metal-plastic multilayer pipe systems and fittings for transporting gaseous fuels for internal plants

- Composition PE-Xc/Al/PE-RT
- Yellow
- Max operating pressure 0.5 Bar
- Operating temperature: -20 ÷ +70 °C

UNI 11344 compliant pipe - IIP UNI certified system

For proper installation refer to UNI 7129-1.

PE-Xc RBM Tita-gas multilayer pipe in roll
Tube multicouche PE-Xc RBM Tita-gas en rouleau
Металлопластиковая труба PE-Xc RBM Tita-gas в бухтах
Conductă multistrat PE-Xc RBM Tita-gas în colac
Tubo multicapa PE-Xc RBM Tita-gas, en rollos
Mehrschichtverbundrohr PE-Xc RBM Tita-gas auf Rolle

Code	Pipe size (mm)	Aluminium th. (mm)	Roll (m)	Pack	Pallet
1969.16.10	16x2	0,20	50	1	600
1969.16.00	16x2	0,20	100	1	1200
1969.20.10	20x2	0,30	50	1	600
1969.20.00	20x2	0,30	100	1	1200
1969.26.00	26x3	0,40	50	1	600
1969.32.00	32x3	0,40	50	1	600

Size: Outside Ø x pipe thickness.

PE-Xc RBM Tita-gas multilayer pipe in bars
Tube multicouche PE-Xc RBM Tita-gas en barres
Металлопластиковая труба PE-Xc RBM Tita-gas в штангах
Conductă multistrat PE-Xc RBM Tita-gas în bare
Tubo multicapa PE-Xc RBM Tita-gas, en barras
Mehrschichtverbundrohr PE-Xc RBM Tita-gas in Stangen

Code	Pipe size (mm)	Aluminium th. (mm)	Bar (m)	Pack
1970.16.00	16x2	0,20	4	25
1970.20.00	20x2	0,30	4	19
1970.26.00	26x3	0,40	4	10
1970.32.00	32x3	0,40	4	6

Size: Outside Ø x pipe thickness.

033MC

3598



PE-Xc RBM Tita-gas multilayer pipe, with protective polypropylene conduit.

Suitable for the implementation of networks transporting gaseous fuels, according to UNI 7129-1 and UNI 11344
Metal-plastic multilayer pipe systems and fittings for transporting gaseous fuels for internal plants

- Composition: PE-Xc/Al/PE-RT
- Yellow
- Max operating pressure 0.5 Bar
- Operating temperature: -20 ÷ +70 °C

UNI 11344 compliant pipe - IIP UNI certified system

PE-Xc RBM Tita-gas multilayer pipe with protective conduit
Tube multicouche PE-Xc RBM Tita-gas avec gaine de protection
Металлопластиковая труба PE-Xc RBM Tita-gas
Conductă multistrat PE-Xc RBM Tita-gas cu înveliș de protecție
Tubo multicapa PE-Xc RBM Tita-gas con vaina de protección, en rollos
Mehrschichtverbundrohr PE-Xc RBM Tita-gas mit Schutzmantel

Code	Pipe size (mm)	Inside Ø conduit (mm)	Roll (m)	Pack	Pallet
3598.16.00	16x2	31	50	1	750
3598.20.00	20x2	31	50	1	700

Size: Outside Ø x pipe thickness.

Suitable for implementing buried distribution systems.
For proper installation refer to UNI 7129-1.

033MC

3599



Protective flexible conduit for RBM Tita-gas pipe.

The flexible conduit, made of polypropylene makes the pipe resistant to crushing and blows.

Resistant to crushing and blows.
Suitable for buried installations.

For proper installation refer to UNI 7129-1.

Protective flexible conduit for RBM Tita-gas pipe
Gaine flexible protectrice pour tube RBM Tita-gas
Гибкая защитная и растяжимая гофра для трубы RBM Tita-gas
Înveliș flexibil de protecție pentru conducta RBM Tita-gas
Vaina flexible para protección de tubo RBM Tita-gas
Biegsame Schutzummantelung für Rohr RBM Tita-gas

Code	Inside Ø conduit (mm)	Outside Ø conduit mm	Roll (m)	Pack	Carton
3599.00.02*	31	36	50	1	1
3599.00.12**	40	45	25	1	1

**Sheathed pipe diameter 16x2 - 20x2 in compliance with standard UNI 7129-1*
***Sheathed pipe diameter 26x3 in compliance with standard UNI 7129-1*

033MC

2085



Press fitting for Tita-gas multilayer pipe.

Suitable for the implementation of networks transporting gaseous fuels, according to UNI 7129 and UNI 11344
Metal-plastic multilayer pipe systems and fittings for transporting gaseous fuels for internal plants

Fitting compatible with series TH clamps.
Externally nickel-plated brass body
HNBR seals (complying with UNI EN 682)
Stainless steel pipe clamping bush
Dielectric pipe clamp cover in PE
Gas threaded connection, flat seat
Max operating pressure 0.5 Bar

Certified system IIP UNI

Connection that can be used for the connection to series 2136 manifolds, valve kit plus box for series 2142 buried systems and recessed kit for series 2140 outlet fitting.

Press fitting for gas for multilayer pipe - rotary nut -flat seat gas thread
Raccord à sertir pour gaz pour tube multicouche - écrou libre - filetage gaz garniture plate
Пресс-фитинг для металлопластиковых труб для газоснабжения - с накидной гайкой - резьба плоское уплотнение
Racord prin presare pentru gaz pentru conductă multistrat - piuliță rotantă - filet gaz garnitură plată
Racor Press Fitting Gas recto con tuerca loca para junta plana para tubo multicapa gas
Gassteckanschluss für Mehrschichtverbundrohr - Überwurfmutter - Gasgewinde flach dichtend

Code	Size A	Size B	Pack	Carton
2085.16.20	16x2	1/2" F	10	200
2085.16.30	16x2	3/4" F	10	160
2085.20.30	20x2	3/4" F	10	160
2085.26.40	26x2	1" F	10	120

Size A: Outside Ø x pipe thickness.

032

1955



Press fitting for Tita-gas multilayer pipe.

Suitable for the implementation of networks transporting gaseous fuels, according to UNI 7129 and UNI 11344
Metal-plastic multilayer pipe systems and fittings for transporting gaseous fuels for internal plants

Fitting compatible with series TH clamps.
Externally nickel-plated brass body
HNBR seals (complying with UNI EN 682)
Stainless steel pipe clamping bush
Dielectric pipe clamp cover in PE
Euroconus threaded connection G3/4"
UNI-EN-ISO 228
Max operating pressure 0.5 Bar

Certified system IIP UNI

Press fitting for gas for multilayer pipe - rotary nut - Euroconus seal gas thread
Raccord à sertir pour gaz pour tube multicouche - écrou libre - filetage gaz garniture Euroconus
Пресс-фитинг для металлопластиковых труб для газоснабжения - с накидной гайкой - резьба газ Euroconus
Racord cu presare pentru gaz pentru conductă multistrat - piuliță fluture - filet gaz garnitură Euroconus
Racor Press Fitting Gas recto con tuerca loca para conexión Euroconus, para tubo multicapa gas
Gasdruckanschluss für Mehrschichtverbundrohr - Überwurfmutter - Gasgewinde Euroconus dichtend

Code	Size A	Size B	Pack	Carton
1955.16.30	16x2	Euroconus	10	160
1955.20.30	20x2	Euroconus	10	160
1955.26.30	26x3	Euroconus	10	120

Size A: Outside Ø x pipe thickness.

032

1956



Press fitting for Tita-gas multilayer pipe.

Suitable for the implementation of networks transporting gaseous fuels, according to UNI 7129 and UNI 11344
Metal-plastic multilayer pipe systems and fittings for transporting gaseous fuels for internal plants

Fitting compatible with series TH clamps.
Externally nickel-plated brass body
HNBR seals (complying with UNI EN 682)
Stainless steel pipe clamping bush
Dielectric pipe clamp cover in PE
Standard RBM threaded connection W 24.5x19F
Max operating pressure 0.5 Bar

Certified system IIP UNI

Press fitting for gas for multilayer pipe - rotary nut - standard RBM thread
Raccord à sertir pour gaz pour tube multicouche - écrou libre - filetage Standard RBM
Пресс-фитинг для металлопластиковых труб для газоснабжения - с накидной гайкой - резьба стандартная RBM
Racord cu presare pentru gaz pentru conductă multistrat - piuliță fluture - filet Standard RBM
Racor Press Fitting Gas recto con tuerca loca para conexión Standard RBM, para tubo multicapa gas
Gasdruckanschluss für Mehrschichtverbundrohr - Überwurfmutter - Standardgewinde RBM

Code	Size A	Size B	Pack	Carton
1956.16.00	16x2	RBM	10	160
1956.20.00	20x2	RBM	10	160

Size A: Outside Ø x pipe thickness.

032

1957



Press fitting for Tita-gas multilayer pipe.

Suitable for the implementation of networks transporting gaseous fuels, according to UNI 7129 and UNI 11344
Metal-plastic multilayer pipe systems and fittings for transporting gaseous fuels for internal plants

Fitting compatible with series TH clamps.
Externally nickel-plated brass body
HNBR seals (complying with UNI EN 682)
Stainless steel pipe clamping bush
Dielectric pipe clamp cover in PE
Max operating pressure 0.5 Bar

Certified system IIP UNI

032

Press fitting for gas for multilayer pipe - straight - intermediate
Raccord à sertir pour gaz pour tube multicouche - droit - intermédiaire
Пресс-фитинг для металлопластиковых труб для газоснабжения- прямой- промежуточный
Racord cu strângere pentru gaz pentru conductă multistrat - drept – intermediar
Manguito Press Fitting Gas recto, para tubo multicapa gas
Druckanschluss für Mehrschichtverbundrohr - gerade - Zwischenstück

Code	Size A	Pack	Carton
1957.16.00	16x2	10	240
1957.20.00	20x2	10	200
1957.26.00	26x3	10	120
1957.32.00	32x3	5	80

Size A: Outside Ø x pipe thickness.

1958



Press fitting for Tita-gas multilayer pipe.

Suitable for the implementation of networks transporting gaseous fuels, according to UNI 7129 and UNI 11344
Metal-plastic multilayer pipe systems and fittings for transporting gaseous fuels for internal plants

Fitting compatible with series TH clamps.
Externally nickel-plated brass body
HNBR seals (complying with UNI EN 682)
Stainless steel pipe clamping bush
Dielectric pipe clamp cover in PE
Straight threaded connection F UNI-EN-ISO 228
Max operating pressure 0.5 Bar

Certified system IIP UNI

032

Press fitting for gas for multilayer pipe - straight - female connection
Raccord à sertir pour gaz pour tube multicouche - droit - branchement femelle
Пресс-фитинг для металлопластиковых труб для газоснабжения- прямой- вн. резьба
Racord cu presare pentru gaz pentru conductă multistrat - drept – prindere tip mamă
Racor Press Fitting Gas recto hembra, para tubo multicapa gas
Druckanschluss für Mehrschichtverbundrohr - gerade - Aufsteckanschluss

Code	Size A	Size B	Pack	Carton
1958.16.20	16x2	1/2" F	10	160
1958.20.20	20x2	1/2" F	10	160
1958.20.30	20x2	3/4" F	10	160
1958.26.30	26x3	3/4" F	10	120
1958.32.40	32x3	1" F	5	80

Size A: Outside Ø x pipe thickness.

1959



Press fitting for Tita-gas multilayer pipe.

Suitable for the implementation of networks transporting gaseous fuels, according to UNI 7129 and UNI 11344
Metal-plastic multilayer pipe systems and fittings for transporting gaseous fuels for internal plants

Fitting compatible with series TH clamps.
Externally nickel-plated brass body
HNBR seals (complying with UNI EN 682)
Stainless steel pipe clamping bush
Dielectric pipe clamp cover in PE
Straight threaded connection M UNI-EN-ISO 228
Max operating pressure 0.5 Bar

Certified system IIP UNI

032

Press fitting for gas for multilayer pipe - straight - male connection
Raccord à sertir pour gaz pour tube multicouche - droit - branchement mâle
Пресс-фитинг для металлопластиковых труб для газоснабжения- прямой- нар. резьба
Racord cu presare pentru gaz pentru conductă multistrat - drept – prindere tip tată
Racor Press Fitting Gas recto macho, para tubo multicapa gas
Druckanschluss für Mehrschichtverbundrohr - gerade - Steckanschluss

Code	Size A	Size B	Pack	Carton
1959.16.20	16x2	1/2" M	10	240
1959.16.30	16x2	3/4" M	10	240
1959.20.20	20x2	1/2" M	10	200
1959.20.30	20x2	3/4" M	10	200
1959.26.30	26x3	3/4" M	10	160
1959.32.40	32x3	1" M	10	80

Size A: Outside Ø x pipe thickness.

1960



Press fitting for Tita-gas multilayer pipe.

Suitable for the implementation of networks transporting gaseous fuels, according to UNI 7129 and UNI 11344
Metal-plastic multilayer pipe systems and fittings for transporting gaseous fuels for internal plants

Fitting compatible with series TH clamps.
Externally nickel-plated brass body
HNBR seals (complying with UNI EN 682)
Stainless steel pipe clamping bush
Dielectric pipe clamp cover in PE
Max operating pressure 0.5 Bar

Certified system IIP UNI

032

Press fitting for gas for multilayer pipe - angle - intermediate
Raccord à sertir pour gaz pour tube multicouche - angle - intermédiaire
Пресс-фитинг для металлопластиковых труб для газоснабжения- угловой- промежуточный
Racord cu presare pentru gaz pentru conductă multistrat – cu cot – intermediar
Codo Press Fitting Gas 90º, para tubo multicapa gas
Steckanschluss für Gas für Mehrschichtverbundrohr - Winkel - Zwischenstück

Code	Size A	Pack	Carton
1960.16.00	16x2	10	240
1960.20.00	20x2	10	160
1960.26.00	26x3	5	80
1960.32.00	32x3	5	80

Size A: Outside Ø x pipe thickness.

1961



Press fitting for Tita-gas multilayer pipe.

Suitable for the implementation of networks transporting gaseous fuels, according to UNI 7129 and UNI 11344
Metal-plastic multilayer pipe systems and fittings for transporting gaseous fuels for internal plants

Fitting compatible with series TH clamps
Externally nickel-plated brass body
HNBR seals (complying with UNI EN 682)
Stainless steel pipe clamping bush
Dielectric pipe clamp cover in PE
Angle threaded connection F UNI-EN-ISO 228
Max operating pressure 0.5 Bar

Certified system IIP UNI

032

Press fitting for gas for multilayer pipe - angle - female connection
Raccord à sertir pour gaz pour tube multicouche - angle - branchement femelle
Пресс-фитинг для металлопластиковых труб для газоснабжения- угловой- вн. резьба
Racord cu presare pentru gaz pentru conductă multistrat – cu cot – prindere tip mamă
Racor Press Fitting Gas curvo hembra, para tubo multicapa gas
Steckanschluss für Gas für Mehrschichtverbundrohr - Winkel - Aufsteckanschluss

Code	Size A	Size B	Pack	Carton
1961.16.20	16x2	1/2" F	10	200
1961.20.20	20x2	1/2" F	10	160
1961.26.30	26x3	3/4" F	5	80
1961.32.40	32x3	1" F	5	40

Size A: Outside Ø x pipe thickness.

1962



Press fitting for Tita-gas multilayer pipe.

Suitable for the implementation of networks transporting gaseous fuels, according to UNI 7129 and UNI 11344
Metal-plastic multilayer pipe systems and fittings for transporting gaseous fuels for internal plants

Fitting compatible with series TH clamps.
Externally nickel-plated brass body
HNBR seals (complying with UNI EN 682)
Stainless steel pipe clamping bush
Dielectric pipe clamp cover in PE
Angle threaded connection M UNI-EN-ISO 228
Max operating pressure 0.5 Bar

Certified system IIP UNI

032

Press fitting for gas for multilayer pipe - angle - male connection
Raccord à sertir pour gaz pour tube multicouche - angle - branchement mâle
Пресс-фитинг для металлопластиковых труб для газоснабжения- углавой- нар.резьба
Racord cu presare pentru gaz pentru conductă multistrat – cu cot – prindere tip tată
Racor Press Fitting Gas curvo macho, para tubo multicapa gas
Steckanschluss für Gas für Mehrschichtverbundrohr - Winkel - Steckanschluss

Code	Size A	Size B	Pack	Carton
1962.16.20	16x2	1/2" M	10	200
1962.20.20	20x2	1/2" M	10	160
1962.26.30	26x3	3/4" M	10	80
1962.32.40	32x3	1" M	5	80

Size A: Outside Ø x pipe thickness.

1963



Press fitting for Tita-gas multilayer pipe.

Suitable for the implementation of networks transporting gaseous fuels, according to UNI 7129 and UNI 11344
Metal-plastic multilayer pipe systems and fittings for transporting gaseous fuels for internal plants

Fitting compatible with series TH clamps.
Externally nickel-plated brass body
HNBR seals (complying with UNI EN 682)
Stainless steel pipe clamping bush
Dielectric pipe clamp cover in PE
Max operating pressure 0.5 Bar

Certified system IIP UNI

032

Gas press fitting for multilayer pipe - T-shaped - intermediate
Raccord à sertir gaz pour tube multicouche - en « T » - intermédiaire
Пресс-фитинг для газовой многослойной трубы - "T"-образный - промежуточный
Racord de presare pentru gaz pentru tub multistrat - în „T" - intermediar
Racor para prensar, para gas para tubo multicapa - en "T" - intermedio
Druckanschluss für Gas für Mehrschichtverbundrohr - "T"-Verbindung - Zwischenstück

Code	Size A	Pack	Carton
1963.16.00	16x2	10	120
1963.20.00	20x2	10	80
1963.26.00	26x3	5	40
1963.32.00	32x3	5	40

Size A: Outside Ø x pipe thickness.

1964



Press fitting for Tita-gas multilayer pipe.

Suitable for the implementation of networks transporting gaseous fuels, according to UNI 7129 and UNI 11344
Metal-plastic multilayer pipe systems and fittings for transporting gaseous fuels for internal plants

Fitting compatible with series TH clamps.
Externally nickel-plated brass body
HNBR seals (complying with UNI EN 682)
Stainless steel pipe clamping bush
Dielectric pipe clamp cover in PE
Threaded connection F UNI-EN-ISO 228
Max operating pressure 0.5 Bar

Certified system IIP UNI

032

Gas press fitting for gas for multilayer pipe - T-shaped - central female connection
Raccord à sertir gaz pour tube multicouche - en « T » - raccord femelle central
Пресс-фитинг для газовой многослойной трубы - "T"-образный - центральное крепление с внутренней резьбой
Racord de presare pentru gaz pentru tub multistrat - în „T" - prindere mamă centrală
Racor para prensar, para gas para tubo multicapa - en "T" - conexión hembra central
Druckanschluss für Mehrschichtverbundrohr Gas - "T"-Verbindung - zentraler Aufsteckanschluss

Code	Size A	Size B	Pack	Carton
1964.16.20	16x2	1/2" F	10	120
1964.20.20	20x2	1/2" F	10	80
1964.26.30	26x3	3/4" F	5	60
1964.32.40	32x3	1" F	5	40

Size A: Outside Ø x pipe thickness.

2064



Press fitting for Tita-gas multilayer pipe.

Suitable for the implementation of networks transporting gaseous fuels, according to UNI 7129 and UNI 11344
Metal-plastic multilayer pipe systems and fittings for transporting gaseous fuels for internal plants

Fitting compatible with series TH clamps.
Externally nickel-plated brass body
HNBR seals (complying with UNI EN 682)
Stainless steel pipe clamping bush
Dielectric pipe clamp cover in PE
Max operating pressure 0.5 Bar

Certified system IIP UNI

032

Press fitting for gas for multilayer pipe - straight with reduced route
Raccord à sertir pour gaz pour tube multicouche - droit à voie réduite
Пресс-фитинг для металлопластиковых труб- прямой - редукционный
Racord prin presare pentru gaz pentru conductă multistrat – drept cu canal redus
Manguito Press Fitting Gas recto reducido, para tubo multicapa gas
Steckanschluss für Mehrschichtverbundrohr - gerade und reduziert

Code	Size A	Size B	Pack	Carton
2064.20.10	20x2	16x2	10	240
2064.26.20	26x3	20x2	10	160
2064.32.20	32x3	26x3	5	120

Size A-B: Outside Ø x pipe thickness.

1965



Press fitting for Tita-gas multilayer pipe.

Suitable for the implementation of networks transporting gaseous fuels, according to UNI 7129 and UNI 11344
Metal-plastic multilayer pipe systems and fittings for transporting gaseous fuels for internal plants

Fitting compatible with series TH clamps.
Externally nickel-plated brass body
HNBR seals (complying with UNI EN 682)
Stainless steel pipe clamping bush
Dielectric pipe clamp cover in PE
Max operating pressure 0.5 Bar

Certified system IIP UNI

Gas press fitting for multilayer pipe - T-shaped - reduced lateral way
Raccord à sertir gaz pour tube multicouche - en « T » - voie réduite latérale
Пресс-фитинг для газовой многослойной трубы - "T"-образный - уменьшенный боковой ход
Racord de presare pentru gaz pentru tub multistrat - în „T" - cale redusă laterală
Racor para prensar, para gas para tubo multicapa - en "T" - vía reducida lateral
Druckanschluss für Mehrschichtverbundrohr Gas - "T"-Verbindung - seitliches Reduzierstück

Code	Size A	Size B	Pack	Carton
1965.20.10	20x2	16x2	10	80

Size A-B: Outside Ø x pipe thickness.

032

1965



Press fitting for Tita-gas multilayer pipe.

Suitable for the implementation of networks transporting gaseous fuels, according to UNI 7129 and UNI 11344
Metal-plastic multilayer pipe systems and fittings for transporting gaseous fuels for internal plants

Fitting compatible with series TH clamps.
Externally nickel-plated brass body
HNBR seals (complying with UNI EN 682)
Stainless steel pipe clamping bush
Dielectric pipe clamp cover in PE
Max operating pressure 0.5 Bar

Certified system IIP UNI

Gas press fitting for multilayer pipe - T-shaped - reduced central way
Raccord à sertir gaz pour tube multicouche - en « T » - voie réduite centrale
Пресс-фитинг для газовой многослойной трубы - "T"-образный - уменьшенный центральный ход
Racord de presare pentru gaz pentru tub multistrat - în „T" - cale redusă centrală
Racor para prensar, para gas para tubo multicapa - en "T" - vía reducida central
Druckanschluss für Mehrschichtverbundrohr Gas - "T"-Verbindung - zentrales Reduzierstück

Code	Size A	Size B	Pack	Carton
1965.16.30	20x2	16x3	10	80
1965.16.60	26x3	16x3	10	40
1965.20.20	26x3	20x3	5	80
1965.20.40	32x3	20x3	5	40
1965.26.00	32x3	26x2	5	40

Size A-B: Outside Ø x pipe thickness.

032

1965



Press fitting for Tita-gas multilayer pipe.

Suitable for the implementation of networks transporting gaseous fuels, according to UNI 7129 and UNI 11344
Metal-plastic multilayer pipe systems and fittings for transporting gaseous fuels for internal plants

Fitting compatible with series TH clamps.
Externally nickel-plated brass body
HNBR seals (complying with UNI EN 682)
Stainless steel pipe clamping bush
Dielectric pipe clamp cover in PE
Max operating pressure 0.5 Bar

Certified system IIP UNI

Gas press fitting for multilayer pipe - T-shaped - reduced central and lateral way
Raccord à sertir gaz pour tube multicouche - en « T » - voie réduite centrale et latérale
Пресс-фитинг для газовой многослойной трубы - "T"-образный - уменьшенный центральный и боковой ход
Racord de presare pentru gaz pentru tub multistrat - în „T" - cale redusă centrală și laterală
Racor para prensar, para gas para tubo multicapa - en "T" - vía reducida central y lateral
Druckanschluss für Mehrschichtverbundrohr Gas - "T"-Verbindung - seitliches und zentrales Reduzierstück

Code	Size A	Size B	Pack	Carton
1965.16.10	20x2	16x2	10	40
1965.16.90	26x3	16x2	5	20
1965.20.70	26x3	20x2	5	20

Size A-B: Outside Ø x pipe thickness.

032

1965



Press fitting for Tita-gas multilayer pipe.

Suitable for the implementation of networks transporting gaseous fuels, according to UNI 7129 and UNI 11344
Metal-plastic multilayer pipe systems and fittings for transporting gaseous fuels for internal plants

Fitting compatible with series TH clamps.
Externally nickel-plated brass body
HNBR seals (complying with UNI EN 682)
Stainless steel pipe clamping bush
Dielectric pipe clamp cover in PE
Max operating pressure 0.5 Bar

Certified system IIP UNI

032

Gas press fitting for multilayer pipe - T-shaped - reduced lateral double way
Raccord à sertir gaz pour tube multicouche - en « T » - double voie réduite latérale
Пресс-фитинг для газовой многослойной трубы - "T"-образный - двойной уменьшенный боковой ход
Racord de presare pentru gaz pentru tub multistrat - în „T" - cale dublă redusă laterală
Racor para prensar, para gas para tubo multicapa - en "T" - doble vía reducida lateral
Druckanschluss für Mehrschichtverbundrohr Gas - "T"-Verbindung - doppeltes seitliches Reduzierstück

Code	Size A	Size B	Pack	Carton
1965.20.00	20x2	16x2	10	40

Size A-B: Outside Ø x pipe thickness.

1966



Press fitting for Tita-gas multilayer pipe.

Suitable for the implementation of networks transporting gaseous fuels, according to UNI 7129 and UNI 11344
Metal-plastic multilayer pipe systems and fittings for transporting gaseous fuels for internal plants

Fitting compatible with series TH clamps.
Externally nickel-plated brass body
HNBR seals (complying with UNI EN 682)
Stainless steel pipe clamping bush
Dielectric pipe clamp cover in PE
Max operating pressure 0.5 Bar

Certified system IIP UNI

032

Gas press fitting for multilayer pipe - T-shaped - triple reduction
Raccord à sertir gaz pour tube multicouche - en « T » - triple réduction
Пресс-фитинг для газовой многослойной трубы - "T"-образный - тройное уменьшение
Racord de presare pentru gaz pentru tub multistrat - în „T" - triplă reducție
Racor para prensar, para gas para tubo multicapa - en "T" - triple reducción
Druckanschluss für Mehrschichtverbundrohr Gas - "T"-Verbindung - dreifaches Reduzierstück

Code	Size A	Size B	Measurement C	Pack	Carton
1966.20.00	26x3	20x2	16x2	10	100

Size A-B-C: Outside Ø x pipe thickness.

1967



Press fitting for Tita-gas multilayer pipe.

Suitable for the implementation of networks transporting gaseous fuels, according to UNI 7129 and UNI 11344
Metal-plastic multilayer pipe systems and fittings for transporting gaseous fuels for internal plants

Fitting compatible with series TH clamps.
Externally nickel-plated brass body
HNBR seals (complying with UNI EN 682)
Stainless steel pipe clamping bush
Dielectric pipe clamp cover in PE
Threaded connection F UNI-EN-ISO 228
Max operating pressure 0.5 Bar

Certified system IIP UNI

Fastening on specific fixing plate code 934.00.00

032

Press fitting for gas for multilayer pipe - flanged elbow - standard length F gas connection
Raccord à sertir gaz pour tube multicouche - coude à bride - longueur standard raccord F gaz
Пресс-фитинг для газовой многослойной трубы - с фланцевым угловым отводом - стандартной длины, крепление F gas
Racord de presare pentru gaz pentru tub multistrat - cu cot cu flanșă - lungime standard prindere Mamă gaz
Racor para prensar, para gas para tubo multicapa - de codo embridado - longitud estándar conexión H para gas
Druckanschluss für Mehrschichtverbundrohr Gas - geflanschter Bogen - Standardlänge IG-Anschluss Gas

Code	Size A	Size B	Pack	Carton
1967.04.00	16x2	1/2" F	10	40
1967.04.10	20x2	1/2" F	10	40

Size A: Outside Ø x pipe thickness.

934



Flanged fittings fixing plate.

Galvanised steel material
Flanged fitting application with prefixed centre distance of 80-100-120-150-160 mm
Possibility of choosing bracket attachments at only centre distance 80 mm

Fixing plate
Plaque de fixation
Крепежная пластина
Placă de fixare
Placa de montaje para racor con base de soporte
Befestigungsplatte

Code	Pack	Carton
934.00.00	1	6

032

934



Fixing and positioning bracket.

Galvanised steel material
Complete with fixing nut

Plate bracket code 934.00.00

Fixing bracket
Étrier de fixation
Монтажная планка
Bridă de fixare
Soporte de fijación y posicionamiento
Befestigungsbügel

Code	Pack	Carton
934.00.50	1	6

032

2136



Manifold complete with integrated shut-off valve.

- Inlet connection G1" UNI-EN-ISO 228
- G3/4" flat seat unction connections
- Max operating temperature 60 °C
- Max operating pressure 5 Bar

Use G 3/4" fittings with thread, flat seat, series 2085 (see page 309) for junction pipe connection.

Manifold complete with integrated shut-off valve
Collecteur avec robinet d'arrêt intégré
Коллектор со встроенным отсекающим клапаном
Colector prevăzut cu supapă integrată de interceptare
Colector Gas con válvula interceptación, para tubo multicapa gas
Sammler komplett mit eingebautetm Absperrventil

Code	Size	Ways	Pack	Carton
2136.06.12	1"	2	1	10
2137.06.12	1"	3	1	8

Inlet connection G1" UNI-EN-ISO 228
G3/4" flat seat junction connections

055

2139



Inspectionable metal box for manifolds, for buried systems.

Metal box
Adjustable height cover
Nr. 2 supports for manifold fixing
Box dimensions:
(LxHxP) = 300x195x75 mm

Inspectionable metal box for manifolds, for buried systems
Coffret métallique contrôlable pour collecteur, pour installations encastrées
Металлический монтажный шкаф для коллекторов, подходит для скрытых систем
Casetă metalică cu posibilitate de inspectare pentru colectoare, pentru instalații poziționate în jgheaburi
Caja metálica empotrable e inspeccionable para colector Gas
Kontrollierbarer Metallkasten für Sammler, für Unterputzanlagen

Code	For manifold	Pack	Carton
2139.00.02	2 - 3 ways	1	1

055

2141



Supports for manifold fixing kit.

- Kit composed of 2 pieces.

Supports for manifold fixing kit
Kit de supports de fixation collecteur
Набор для крепления коллекторов
Kit suporturi pentru fixare colector
Par soportes de para colector Gas en caja metálica
Bausatz Halterungen für Sammlerbefestigung

Code	Pack	Carton
2141.00.02	1	1

055

2142



Valve kit plus box for buried systems.

- G3/4" flat seat connection
- Max operating temperature 60 °C
- Max operating pressure 5 Bar

Kit composed of:
- Ball valve;
- Box for buried gas systems;
- Protective cap.

Kit for buried systems.

Use G 3/4" fittings with thread, flat seat, series 2085 (see page 309) for pipe connection.

Valve kit plus box for buried systems
Kit vanne pour coffret pour installations encastrées
Комплект клапан и коробка для скрытых установок
Kit supapă plus cutie pentru instalații poziționate în jgheaburi
Kit válvula de esfera y caja empotrar, para tubo multicapa gas
Bausatz Ventil plus Dose für Unterputzanlagen

Code	Size	Pack	Carton
2142.00.12	3/4"	1	10

G3/4" flat seat connection

055

2143



Cover plate.

Suitable for valve kit for buried systems code 2142.00.12

Available in white or satin chrome-plated version.

Cover plate
Plaque de revêtement
Крышка
Placa de acoperire
Tapa para kit válvula de esfera y caja empotrar
Abdeckplatte

Code	Colour	Pack	Carton
2143.00.02	W	1	10
2143.00.12	C	1	10

W = White
C = Satin chrome

055

2140



Built-in kit for outlet fitting.

- G3/4" flat seat inlet connection
- Output connection 1/2"F UNI-ISO 7/1 (UNI EN 10226)
- Sandwich box
- ABS white cover plate
- Max operating temperature 60 °C
- Max operating pressure 5 Bar

Kit composed of:
- Threaded angled fitting;
- Box for buried gas systems;
- White adjustable plate;
- Protective cap.

Built-in kit for outlet fitting
Kit encastrable pour raccord de sortie
Встраиваемый комплект для выходного соединения
Kit de încastrat pentru racord de ieşire
Kit racor 1/2" hembra, caja empotrar y tapa, para tubo multicapa gas
Einbaubausatz für Ausgangsanschlüsse

Code	Size	Pack	Carton
2140.00.12	3/4"	1	10

G3/4" flat seat inlet connection
F1/2" output side connection

Use G 3/4" fittings with thread, flat seat, series 2085 (see page 309) for pipe connection.

055

1542



PE-Xc RBM Tita-fix multilayer pipe.

Multilayer pipe for underfloor heating in polyethylene, aluminium and polyethylene. Welded aluminium layer type A

- Composition PE-Xc/Al/PE-RT
- White
- Poper 10 Bar
- Tmal 95 °C
- Duration at operating conditions ~ 50 years
- Type: PE-Xc

Compliant with: EN ISO 21003 - DM 174/04

The entire package must be ordered.

PE-Xc RBM Tita-fix multilayer pipe in roll
Tube multicouche PE-Xc RBM Tita-fix en rouleau
Металлопластиковая труба PE-Xc RBM Tita-fix в бухтах
Conductă multistrat PE-Xc RBM Tita-fix în colac
Tubo multicapa PE-Xc RBM Tita-fix, en rollos
Tubo multistrato PE-Xc RBM Tita-fix in rotolo

Code	Pipe size (mm)	Aluminium th. (mm)	Roll (m)	Pack	Pallet
1542.16.00	16x2	0,20	100	1	1400
1542.16.40	16x2	0,20	250	1	2500
1542.16.30	16x2	0,20	500	1	3000
1542.20.00	20x2	0,30	100	1	1400
1542.26.00	26x3	0,40	50	1	550
1542.32.00	32x3	0,40	50	1	600
1542.20.40	20x2	0,30	250	1	1750

Size: Outside Ø x pipe thickness

PE-Xc RBM Tita-fix multilayer pipe in bars
Tube multicouche PE-Xc RBM Tita-fix en barres
Металлопластиковая труба PE-Xc RBM Tita-fix в штангах
Conductă multistrat PE-Xc RBM Tita-fix în bare
Tubo multicapa PE-Xc RBM Tita-fix, en barras
Mehrschichtverbundrohr PE-Xc RBM Tita-fix in Stangen

Code	Pipe size (mm)	Aluminium th. (mm)	Bar (m)	Pack
1543.16.00	16x2	0,20	4	25
1543.20.00	20x2	0,30	4	19
1543.26.00	26x3	0,40	4	10
1543.32.00	32x3	0,40	4	6

Size: Outside Ø x pipe thickness

033MC

1541



PE-Xc RBM Tita-fix multilayer pipe, protected externally with polypropylene corrugated conduit.

Pipe features as in code 1542-1543.

Corrugated conduit features:
- outside diameter of pipe 16x2: 25 mm
- outside diameter of pipe 20x2: 32 mm

Compliant with: EN ISO 21003 - DM 174/04

Suitable for domestic hot water distribution systems.

PE-Xc RBM Tita-fix multilayer pipe in roll with protective corrugated conduit - Blue
Tube multicouche PE-Xc RBM Tita-fix en rouleau avec gaine ondulée de protection - Bleu
Металлопластиковая PE-Xc RBM Tita-fix Tita-fix труба в бухтах с защитной гофрой - синий
Conductă multistrat PE-Xc RBM Tita-fix în colac cu înveliș de protecție cu striații - Albastru
Tubo multicapa PE-Xc RBM Tita-fix con vaina corrugada de protección, en rollos - Azul
Mehrschichtverbundrohr PE-Xc RBM Tita-fix auf Rolle mit gefaltetem Schutzmantel - Blau

Code	Pipe size (mm)	Aluminium th. (mm)	Roll (m)	Pack	Pallet
1541.16.80	16x2	0,20	50	1	700
1541.20.80	20x2	0,30	50	1	650

PE-Xc RBM Tita-fix multilayer pipe in roll with protective corrugated conduit - Red
Tube multicouche PE-Xc RBM Tita-fix en rouleau avec gaine ondulée de protection - Rouge
Металлопластиковая PE-Xc RBM Tita-fix Tita-fix труба в бухтах с защитной гофрой - красный
Conductă multistrat PE-Xc RBM Tita-fix în colac cu înveliș de protecție cu striații - rosu
Tubo multicapa PE-Xc RBM Tita-fix con vaina corrugada de protección, en rollos - Rojo
Mehrschichtverbundrohr PE-Xc RBM Tita-fix auf Rolle mit gefaltetem Schutzmantel - Rot

Code	Pipe size (mm)	Aluminium th. (mm)	Roll (m)	Pack	Pallet
1541.16.90	16x2	0,20	50	1	700
1541.20.90	20x2	0,30	50	1	650

Size: Outside Ø x pipe thickness

033MC

1541



PE-Xc RBM Tita-fix multilayer pipe externally insulated with closed cell expanded polyethylene conduit, CFC-free, flame retardant.

Pipe features as in code 1542-1543.

Insulating conduit features: 1541
- Density 35 kg/m³
- Thermal conductivity at 40 °C
- only conduit: 0.038 W/mK
- conduit + pipe (average value): 0.069 W/mK
- Steam permeability μ 5.482
- Insulation thickness 6 mm

Compliant with: EN ISO 21003 - It. MD 174/04 - It. Law 10/91 (insulation - only 16x2 pipe)

Suitable for heating and domestic hot water distribution systems. Installation compliant with the law 10/91 and valid for pipes running in heated environments and/or structures not bordering with the outside or with unheated rooms.

PE-Xc RBM Tita-fix multilayer pipe in roll with thermal insulation - Grey
Tube multicouche PE-Xc RBM Tita-fix en rouleau à isolation thermique - Gris
Металлопластиковая труба PE-Xc RBM Tita-fix в бухтах с теплоизоляцией - серый
Conductă multistrat PE-Xc RBM Tita-fix în colac cu izolare termică - Gri
Tubo multicapa PE-Xc RBM Tita-fix con aislamiento térmico, en rollos - Gris
Mehrschichtverbundrohr PE-Xc RBM Tita-fix auf Rolle mit Wärmedämmung - Grau

Code	Pipe size (mm)	Aluminium th. (mm)	Roll (m)	Pack	Pallet
1541.16.50*	16x2(*)	0,20	50	1	750
1541.20.50*	20x2	0,30	50	1	650
1541.26.50*	26x3	0,40	50	1	600
1541.32.50*	32x3	0,40	25	1	325

Size: Outside Ø x pipe thickness
**Diameters compliant with It. Law 10/91*

033MC

1541



PE-Xc RBM Tita-fix multilayer pipe externally insulated with closed cell expanded polyethylene anti-condensation conduit, CFC-free, flame retardant.

Pipe features as in code 1542-1543.

Insulating conduit features:
- Density 35 kg/m³
- Thermal conductivity at 40 °C
- conduit only 0.038 W/mK
- conduit+pipe (average value) 0.062 W/mK
- Steam permeability μ 5.482
- Insulation thickness 10 mm

Compliant with: EN ISO 21003 - It. MD 174/04 - It. Law 10/91 (insulation)

Suitable for hydronic refrigeration and heating systems Installation compliant with the law 10/91 and valid for pipes running in heated environments and/or structures not bordering with the outside or with unheated rooms.

PE-Xc RBM Tita-fix multilayer pipe in roll with thermal anti-condensation insulation
Tube multicouche PE-Xc RBM Tita-fix en rouleau à isolation thermique anti-condensation
Металлопластиковая труба PE-Xc RBM Tita-fix в бухтах
Conductă multistrat PE-Xc RBM Tita-fix în colac cu izolare termică împotriva condensului
Tubo multicapa PE-Xc RBM Tita-fix con aislamiento térmico anticondensación, en rollos
Mehrschichtverbundrohr PE-Xc RBM Tita-fix auf Rolle mit kondensfestem Wärmeschutz

Code	Pipe size (mm)	Aluminium th. (mm)	Roll (m)	Pack	Pallet
1541.16.40	16x2	0,20	50	1	550
1541.20.40	20x2	0,30	50	1	550
1541.26.40	26x3	0,40	50	1	550
1541.32.40	32x3	0,40	25	1	325

Size: Outside Ø x pipe thickness

033MC

1545



PE-RT RBM Tita-fix multilayer pipe.

Multilayer pipe for underfloor heating in polyethylene, aluminium and polyethylene. Welded aluminium layer type A

- Composition PE-RT/Al/PE-RT
- White
- Poper 10 Bar
- Tmal 95 °C
- Duration at operating conditions ~ 50 years
- Type: PE-RT

Compliant with: EN ISO 21003 - DM 174/04

SKZ

PE-RT RBM Tita-fix multilayer pipe in roll
Tube multicouche PE-RT RBM Tita-fix en rouleau
Металлопластиковая труба PE-RT RBM Tita-fix в бухтах
Conductă multistrat PE-RT RBM Tita-fix în colac
Tubo multicapa PE-RT RBM Tita-fix, en rollos
Mehrschichtverbundrohr PE-RT RBM Tita-fix auf Rolle

Code	Pipe size (mm)	Aluminium th. (mm)	Roll (m)	Pack	Pallet
1545.16.00	16x2	0,20	100	100	1400
1545.16.20	16x2	0,20	250	250	2500
1545.16.10	16x2	0,20	500	500	3000
1545.20.00	20x2	0,30	100	100	1400
1545.20.10	20x2	0,30	250	250	1750
1545.20.50	20x2	0,30	500	500	2500
1545.26.00	26x3	0,40	50	1	550
1545.32.00	32x3	0,40	50	1	600
1545.40.00	40x3,5	0,50	25	1	300

Size: Outside Ø x pipe thickness

PE-RT RBM Tita-fix multilayer pipe in bars
Tube multicouche PE-RT RBM Tita-fix en barres
Металлопластиковая труба PE-RT RBM Tita-fix в штангах
Conductă multistrat PE-RT RBM Tita-fix în bare
Tubo multicapa PE-RT RBM Tita-fix, en barras
Mehrschichtverbundrohr PE-RT RBM Tita-fix in Stangen

Code	Pipe size (mm)	Aluminium th. (mm)	Bar (m)	Pack
1546.16.00	16x2	0,20	4	100
1546.20.00	20x2	0,30	4	76
1546.26.00	26x3	0,40	4	40
1546.32.00	32x3	0,40	4	24
1546.40.00	40x3,5	0,50	5	50
1546.50.00	50x4	0,60	5	15
1546.63.00	63x4,5	0,80	5	5

Size: Outside Ø x pipe thickness

033MT

1544

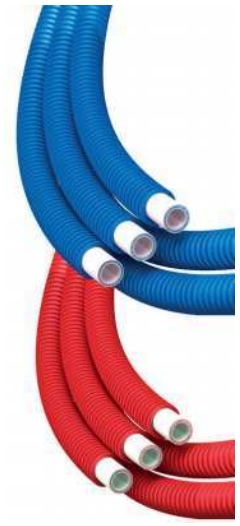

PE-RT RBM Tita-fix multilayer pipe, protected externally with polypropylene corrugated conduit.

Pipe features as in code 1545-1546.

Corrugated conduit features:
- outside diameter of pipe 16x2: 25 mm
- outside diameter of pipe 20x2: 32 mm
- Type: PE-RT

Compliant with: EN ISO 21003 - DM 174/04

SKZ

Suitable for domestic hot water distribution systems.

PE-RT RBM Tita-fix multilayer pipe in roll with protective corrugated conduit - Blue
Tube multicouche PE-RT RBM Tita-fix en rouleau avec gaine ondulée de protection - Bleu
Металлопластиковая труба PE-RT RBM Tita-fix в бухтах - синий
Conductă multistrat PE-RT RBM Tita-fix în colac cu înveliș de protecție cu striații - Albastru
Tubo multicapa PE-RT RBM Tita-fix con vaina de protección, en rollos - Azul
Mehrschichtverbundrohr PE-RT RBM Tita-fix auf Rolle mit gefaltetem Schutzmantel - Blau

Code	Pipe size (mm)	Aluminium th. (mm)	Roll (m)	Pack	Pallet
1544.16.80	16x2	0,20	50	1	700
1544.20.80	20x2	0,30	50	1	650

PE-RT RBM Tita-fix multilayer pipe in roll with protective corrugated conduit - Red
Tube multicouche PE-RT RBM Tita-fix en rouleau avec gaine ondulée de protection - Rouge
Металлопластиковая труба PE-RT RBM Tita-fix в бухтах - красный
Conductă multistrat PE-RT RBM Tita-fix în colac cu înveliș de protecție cu striații - Roșu
Tubo multicapa PE-RT RBM Tita-fix con vaina de protección, en rollos - Rojo
Mehrschichtverbundrohr PE-RT RBM Tita-fix auf Rolle mit gefaltetem Schutzmantel - Rot

Code	Pipe size (mm)	Aluminium th. (mm)	Roll (m)	Pack	Pallet
1544.16.90	16x2	0,20	50	1	700
1544.20.90	20x2	0,30	50	1	650

Size: Outside Ø x pipe thickness

033MT

1544

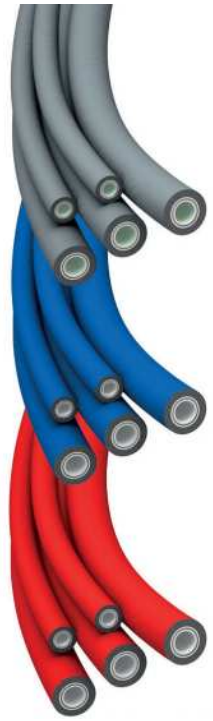

PE-RT RBM Tita-fix multilayer pipe externally insulated with closed cell expanded polyethylene conduit, CFC-free, flame retardant.

Pipe features as in code 1545-1546.

Insulating conduit features:
- Density 35 kg/m³
- Thermal conductivity at 40 °C
- only conduit: 0.038 W/mK
- conduit + pipe (average value): 0.069 W/mK
- Steam permeability μ 5.482
- Insulation thickness 6 mm
- Type: PE-RT

Compliant with: EN ISO 21003 - It. MD 174/04 - It. Law 10/91 (insulation - only 16x2 pipe)

SKZ

Suitable for heating and domestic hot water distribution systems. Installation compliant with the law 10/91 and valid for pipes running in heated environments and/or structures not bordering with the outside or with unheated rooms.

PE-RT RBM Tita-fix multilayer pipe in roll with thermal insulation - Grey
Tube multicouche PE-RT RBM Tita-fix en rouleau à isolation thermique - Gris
Металлопластиковая труба PE-RT RBM Tita-fix в бухтах - серый
Conductă multistrat PE-RT RBM Tita-fix în colac cu izolare termică - Gri
Tubo multicapa PE-RT RBM Tita-fix con aislamiento térmico, en rollos - Gris
Mehrschichtverbundrohr PE-RT RBM Tita-fix auf Rolle mit Wärmedämmung - Grau

Code	Pipe size (mm)	Aluminium th. (mm)	Roll (m)	Pack	Pallet
1544.16.50*	16x2(*)	0,20	50	1	750
1544.20.50*	20x2	0,30	50	1	650
1544.26.50*	26x3	0,40	50	1	600
1544.32.50*	32x3	0,40	25	1	325

PE-RT RBM Tita-fix multilayer pipe in roll with thermal insulation - Blue
Tube multicouche PE-RT RBM Tita-fix en rouleau à isolation thermique - Bleu
Металлопластиковая труба PE-RT RBM Tita-fix в бухтах - синий
Conductă multistrat PE-RT RBM Tita-fix în colac cu izolare termică - Albastru
Tubo multicapa PE-RT RBM Tita-fix con aislamiento térmico, en rollos - Azul
Mehrschichtverbundrohr PE-RT RBM Tita-fix auf Rolle mit Wärmedämmung - Blau

Code	Pipe size (mm)	Aluminium th. (mm)	Roll (m)	Pack	Pallet
1946.16.20*	16x2(*)	0,20	50	1	750
1946.20.20*	20x2	0,30	50	1	650
1946.26.20*	26x3	0,40	50	1	600
1946.32.20*	32x3	0,40	25	1	325

PE-RT RBM Tita-fix multilayer pipe in roll with thermal insulation - Red
Tube multicouche PE-RT RBM Tita-fix en rouleau à isolation thermique - Rouge
Металлопластиковая труба PE-RT RBM Tita-fix в бухтах - красный
Conductă multistrat PE-RT RBM Tita-fix în colac cu izolare termică - Roșu
Tubo multicapa PE-RT RBM Tita-fix con aislamiento térmico, en rollos - Rojo
Mehrschichtverbundrohr PE-RT RBM Tita-fix auf Rolle mit Wärmedämmung - Rot

Code	Pipe size (mm)	Aluminium th. (mm)	Roll (m)	Pack	Pallet
1946.16.30*	16x2(*)	0,20	50	1	750
1946.20.30*	20x2	0,30	50	1	650
1946.26.30*	26x3	0,40	50	1	600
1946.32.30*	32x3	0,40	25	1	325

Size: Outside Ø x pipe thickness
(*) Diameters comply with Law 10/91

033MT

1544



PE-RT RBM Tita-fix multilayer pipe externally insulated with closed cell expanded polyethylene anti-condensation conduit, CFC-free, flame retardant.

Pipe features as in code 1545-1546.

Insulating conduit features:
- Density 35 kg/m³
- Thermal conductivity at 40 °C
- conduit only 0.038 W/mK
- conduit+pipe (average value) 0.062 W/mK
- Steam permeability μ 5.482
- Insulation thickness 10 mm

Compliant with: EN ISO 21003 - It. MD 174/04 - It. Law 10/91 (insulation)

SKZ

Suitable for hydronic refrigeration and heating systems. Insulation compliant with It. law 10/91 and valid for pipes installed in heated premises and/or facilities facing neither outside nor unheated rooms.

PE-RT RBM Tita-fix multilayer pipe in roll with thermal anti-condensation insulation
Tube multicouche PE-RT RBM Tita-fix en rouleau à isolation thermique anti-condensation
Металлопластиковая труба PE-RT RBM Tita-fix в бухтах
Conductă multistrat PE-RT RBM Tita-fix în colac cu izolare termică împotriva condensului
Tubo multicapa PE-RT RBM Tita-fix con aislamiento térmico anticondensación, en rollos
Mehrschichtverbundrohr PE-RT RBM Tita-fix auf Rolle mit kondensfestem Wärmeschutz

Code	Pipe size (mm)	Aluminium th. (mm)	Roll (m)	Pack	Pallet
1544.16.40	16x2	0,20	50	1	550
1544.20.40	20x2	0,30	50	1	550
1544.26.40	26x3	0,40	50	1	550
1544.32.40	32x3	0,40	25	1	325

Size: Outside Ø x pipe thickness

033MT

812



Press fitting for Tita-fix multilayer pipe.

Multi-clamp fitting.
Compatible with clamps series:
- TH, H, U, B for Ø 14x2;
- TH, H, U, B, F for Ø 16x2 - 18x2 and 20x2;
- TH, H, B for Ø 26x3;
- TH, H for Ø 32x3;

Externally nickel-plated brass body
Elastomer seals
Stainless steel pipe clamping bush
Dielectric pipe clamp cover in PE
Threaded connection UNI-EN-ISO 228
Max operating temperature 95 °C
Max operating pressure 10 Bar

CSTB (only ø 16x2 - 20x2 - 26x3 - 32x3 / Certification applicable only if matched with CSTB certified "RBM TITA-FIX" pipe). - EN ISO 21003 2/10, 4/6, 5/6 bar

Press fitting for multilayer pipe - rotary nut - flat seat gas thread
Raccord à sertir pour tube multicouche - écrou libre - filetage gaz portée plate
Пресс-фитинг для металлопластиковых труб - с накидной гайкой - резьба плоское уплотнение
Racord cu presare pentru conductă multistrat - piuliță rotantă - filet gaz garnitură plată
Racor Press Fitting Gas recto con tuerca loca para junta plana para tubo multicapa gas
Steckanschluss für Mehrschichtverbundrohr Überwurfmutter - Gasgewinde flach dichtend

Code	Size A	Size B	Pack	Carton
812.14.10	14x2	3/8" F	10	200
812.14.20	14x2	1/2" F	10	200
812.16.10	16x2	3/8" F	10	200
812.16.20	16x2	1/2" F	10	200
812.16.30	16x2	3/4" F	10	160
812.18.30	18x2	3/4" F	10	160
812.20.20	20x2	1/2" F	10	160
812.20.30	20x2	3/4" F	10	160
812.26.30	26x3	3/4" F	10	100
812.26.40	26x3	1" F	10	100
812.26.50	26x3	1"1/4 F	1	1
812.32.50	32x3	1"1/4 F	10	80

Size A: Outside Ø x pipe thickness

032

963



Press fitting for metal-plastic multilayer pipe.

Multi-clamp fitting.
Compatible with clamps series:
- TH, H, U, B for Ø 14x2;
- TH, H, U, B, F for Ø 16x2 - 18x2 and 20x2;
- TH, H, B for Ø 26x3;
- TH, H for Ø 32x3;
- TH for Ø 40x3.5 - 50x4 e 63x4.5

Externally nickel-plated brass body
Elastomer seals
Stainless steel pipe clamping bush
Dielectric pipe clamp cover in PE
Euroconus threaded connection G3/4" UNI-EN-ISO 228
Max operating temperature 95 °C
Max operating pressure 10 Bar

CSTB (only ø 16x2 - 20x2 - 26x3 - 32x3 / Certification applicable only if matched with CSTB certified "RBM TITA-FIX" pipe). - EN ISO 21003 2/10, 4/6, 5/6 bar

Press fitting for metal-plastic multilayer pipe - rotary nut - Euroconus seal gas thread
Raccord à sertir pour tube multicouche métal-plastique - écrou pivotant - filetage gaz joint Euroconus
Пресс-фитинг для газовой многослойной металлопластиковой трубы - поворотная гайка - резьба gas уплотнитель Euroconus
Racord de presare pentru tub multistrat metal - plastic - piuliță rotativă - filet gaz - etanșare Euroconus
Racor para prensar, para tubo multicapa metal- plástico - tuerca giratoria - rosca de gas retención Euroconus
Druckanschluss für Metall-Kunststoff-Mehrschichtverbundrohr - Überwurfmutter - Gasgewinde Euroconus dichtend

Code	Size A	Size B	Pack	Carton
963.16.30	16x2	Euroconus	10	100
963.18.30	18x2	Euroconus	10	100
963.20.30	20x2	Euroconus	10	100
963.26.30	26x3	Euroconus	10	50

Size A: Outside Ø x pipe thickness

032

826



Press fitting for metal-plastic multilayer pipe.

Multi-clamp fitting.
Compatible with clamps series:
- TH, H, U, B for Ø 14x2;
- TH, H, U, B, F for Ø 16x2 - 18x2 and 20x2;
- TH, H, B for Ø 26x3;
- TH, H for Ø 32x3;
- TH for Ø 40x3.5 - 50x4 e 63x4.5

Externally nickel-plated brass body
Elastomer seals
Stainless steel pipe clamping bush
Dielectric pipe clamp cover in PE
Standard RBM threaded connection W24.5x19F
Max operating temperature 95 °C
Max operating pressure 10 Bar

CSTB (only ø 16x2 - 20x2 - 26x3 - 32x3 / Certification applicable only if matched with CSTB certified "RBM TITA-FIX" pipe). - EN ISO 21003 2/10, 4/6, 5/6 bar

Gas press fitting for metal-plastic multilayer pipe - rotary nut - standard RBM thread
Raccord à sertir pour tube multicouche métal-plastique - écrou pivotant - filetage gaz joint RBM
Пресс-фитинг для газовой многослойной металлопластиковой трубы - поворотная гайка - резьба стандартная RBM
Racord de presare pentru tub multistrat metal - plastic - piuliță rotativă - filet standard RBM
Racor para prensar, para tubo multicapa de metal-plástico - tuerca giratoria - rosca estándar RBM
Druckanschluss für Metall-Kunststoff-Mehrschichtverbundrohr - Überwurfmutter - Standardgewinde RBM

Code	Size A	Size B	Pack	Carton
826.14.00	14x2	RBM	10	100
826.16.00	16x2	RBM	10	100
826.18.00	18x2	RBM	10	100
826.20.00	20x2	RBM	10	100

Size A: Outside Ø x pipe thickness

032

962



Press fitting for Tita-fix multilayer pipe.

Multi-clamp fitting.
Compatible with clamps series:
- TH, H, U, B for Ø 14x2;
- TH, H, U, B, F for Ø 16x2 - 18x2 and 20x2;
- TH, H, B for Ø 26x3;
- TH, H for Ø 32x3;
- TH for Ø 40x3.5 - 50x4 e 63x4.5

Externally nickel-plated brass body
Elastomer seals
Stainless steel pipe clamping bush
Dielectric pipe clamp cover in PE
Withworth threaded connection W 28 x 19 F
Max operating temperature 95 °C
Max operating pressure 10 Bar

CSTB (only ø 16x2 - 20x2 - 26x3 - 32x3 / Certification applicable only if matched with CSTB certified "RBM TITA-FIX" pipe). - EN ISO 21003 2/10, 4/6, 5/6 bar

Press fitting for multilayer pipe - rotary nut - thread W28x19F
Raccord à sertir pour tube multicouche - écrou libre - filetage W28x19F
Пресс-фитинг для металлопластиковых труб - с накидной гайкой - резьба W28x19F
Racord cu presare pentru conductă multistrat - piuliță rotantă - filet W28x19F
Racor Press Fitting recto con tuerca loca para conexión Withworth W28x19F, para tubo multicapa
Steckanschluss für Mehrschichtverbundrohr - Überwurfmutter - Gewinde W28x19F

Code	Size A	Size B	Pack	Carton
962.14.00	14x2	W 28x19 F	10	100
962.16.00	16x2	W 28x19 F	10	100
962.20.00	20x2	W 28x19 F	10	100
962.26.00	26x3	W 28x19 F	10	40

Size A: Outside Ø x pipe thickness

032

671



Press fitting for Tita-fix multilayer pipe.

Multi-clamp fitting.
Compatible with clamps series:
- TH, H, U, B for Ø 14x2;
- TH, H, U, B, F for Ø 16x2 - 18x2 and 20x2;
- TH, H, B for Ø 26x3;
- TH, H for Ø 32x3;
- TH for Ø 40x3.5 - 50x4 e 63x4.5

Externally nickel-plated brass body
Elastomer seals
Stainless steel pipe clamping bush
Dielectric pipe clamp cover in PE
Max operating temperature 95 °C
Max operating pressure 10 Bar

CSTB (only ø 16x2 - 20x2 - 26x3 - 32x3 / Certification applicable only if matched with CSTB certified "RBM TITA-FIX" pipe). - EN ISO 21003 2/10, 4/6, 5/6 bar

Press fitting for multilayer pipe - straight - intermediate
Raccord à sertir pour tube multicouche - droit - intermédiaire
Пресс-фитинг для металлопластиковых труб - прямой - промежуточный
Racord cu presare pentru conductă multistrat - drept – intermediar
Manguito Press Fitting Gas, para tubo multicapa
Steckanschluss für Mehrschichtverbundrohr - gerade - Zwischenstück

Code	Size A	Pack	Carton
671.14.00	14x2	10	240
671.16.00	16x2	10	240
671.18.00	18x2	10	200
671.20.00	20x2	10	200
671.26.00	26x3	10	120
671.32.00	32x3	5	100
671.40.00	40x3,5	5	60
671.50.00	50x4	4	40
671.63.00	63x4,5	3	18

Size A: Outside Ø x pipe thickness

032

672



Press fitting for Tita-fix multilayer pipe.

Multi-clamp fitting.
Compatible with clamps series:
- TH, H, U, B for Ø 14x2;
- TH, H, U, B, F for Ø 16x2 - 18x2 and 20x2;
- TH, H, B for Ø 26x3;
- TH, H for Ø 32x3;
- TH for Ø 40x3.5 - 50x4 e 63x4.5

Externally nickel-plated brass body
Elastomer seals
Stainless steel pipe clamping bush
Dielectric pipe clamp cover in PE
Straight threaded connection F UNI-EN-ISO 228
Max operating temperature 95 °C
Max operating pressure 10 Bar

CSTB (only ø 16x2 - 20x2 - 26x3 - 32x3 / Certification applicable only if matched with CSTB certified "RBM TITA-FIX" pipe). - EN ISO 21003 2/10, 4/6, 5/6 bar

032

Press fitting for multilayer pipe - straight - female gas connection
Raccord à sertir pour tube multicouche - droit - branchement femelle gaz
Пресс-фитинг для металлопластиковых труб - прямой - вн. резьба
Racord cu presare pentru conductă multistrat - drept – prindere tip mamă gaz
Racor Press Fitting Gas recto hembra, para tubo multicapa gas
Steckanschluss für Mehrschichtverbundrohr - gerade - Aufsteckanschluss Gas

Code	Size A	Size B	Pack	Carton
672.14.20	14x2	1/2" F	10	200
672.16.20	16x2	1/2" F	10	200
672.18.20	18x2	1/2" F	10	200
672.18.30	18x2	3/4" F	10	160
672.20.20	20x2	1/2" F	10	200
672.20.30	20x2	3/4" F	10	160
672.26.30	26x3	3/4" F	10	100
672.26.40	26x3	1" F	10	100
672.32.40	32x3	1" F	5	80
672.40.40	40x3,5	1" F	5	40
672.40.50	40x3,5	1"1/4 F	5	40
672.50.60	50x4	1"1/2 F	5	20
672.63.70	63x4,5	2" F	1	16

Size A: Outside Ø x pipe thickness

673



Press fitting for Tita-fix multilayer pipe.

Multi-clamp fitting.
Compatible with clamps series:
- TH, H, U, B for Ø 14x2;
- TH, H, U, B, F for Ø 16x2 - 18x2 and 20x2;
- TH, H, B for Ø 26x3;
- TH, H for Ø 32x3;
- TH for Ø 40x3.5 - 50x4 e 63x4.5

Externally nickel-plated brass body
Elastomer seals
Stainless steel pipe clamping bush
Dielectric pipe clamp cover in PE
Straight threaded connection M UNI-EN-ISO 228
Max operating temperature 95 °C
Max operating pressure 10 Bar

CSTB (only ø 16x2 - 20x2 - 26x3 - 32x3 / Certification applicable only if matched with CSTB certified "RBM TITA-FIX" pipe). - EN ISO 21003 2/10, 4/6, 5/6 bar

032

Press fitting for multilayer pipe - straight - male gas connection
Raccord à sertir pour tube multicouche - droit - branchement mâle gaz
Пресс-фитинг для металлопластиковых труб - прямой -резьба нар.
Racord cu presare pentru conductă multistrat - drept – prindere tip tată gaz
Racor Press Fitting recto macho, para tubo multicapa
Steckanschluss für Mehrschichtverbundrohr - gerade - Steckverbindung Gas

Code	Size A	Size B	Pack	Carton
673.14.10	14x2	3/8" M	10	240
673.14.20	14x2	1/2" M	10	100
673.16.10	16x2	3/8" M	10	240
673.16.20	16x2	1/2" M	10	240
673.18.20	18x2	1/2" M	10	200
673.18.30	18x2	3/4" M	10	200
673.20.20	20x2	1/2" M	10	200
673.20.30	20x2	3/4" M	10	200
673.26.30	26x3	3/4" M	10	120
673.26.40	26x3	1" M	10	120
673.32.40	32x3	1" M	5	100
673.40.50	40x3,5	1"1/4 M	5	60
673.50.60	50x4	1"1/2 M	5	40
673.63.70	63x4,5	2" M	1	32

Size A: Outside Ø x pipe thickness

674



Press fitting for Tita-fix multilayer pipe.

Multi-clamp fitting.
Compatible with clamps series:
- TH, H, U, B for Ø 14x2;
- TH, H, U, B, F for Ø 16x2 - 18x2 and 20x2;
- TH, H, B for Ø 26x3;
- TH, H for Ø 32x3;
- TH for Ø 40x3.5 - 50x4 e 63x4.5

Externally nickel-plated brass body
Elastomer seals
Stainless steel pipe clamping bush
Dielectric pipe clamp cover in PE
Max operating temperature 95 °C
Max operating pressure 10 Bar

CSTB (only ø 16x2 - 20x2 - 26x3 - 32x3 / Certification applicable only if matched with CSTB certified "RBM TITA-FIX" pipe). - EN ISO 21003 2/10, 4/6, 5/6 bar

032

Press fitting for multilayer pipe - angle - intermediate
Raccord à sertir pour tube multicouche - en angle - intermédiaire
Пресс-фитинг для металлопластиковых труб - угловой - промежуточный
Racord prin presare pentru conductă multistrat - cu cot – intermediar
Codo Press Fitting 90º, para tubo multicapa
Steckanschluss für Mehrschichtverbundrohr - Winkel - Zwischenstück

Code	Size A	Pack	Carton
674.14.00	14x2	10	160
674.16.00	16x2	10	160
674.18.00	18x2	10	160
674.20.00	20x2	10	160
674.26.00	26x3	5	80
674.32.00	32x3	5	60
674.40.00	40x3,5	5	40
674.50.00	50x4	1	16
674.63.00	63x4,5	1	16

Size A: Outside Ø x pipe thickness

675



Press fitting for Tita-fix multilayer pipe.

Multi-clamp fitting.
Compatible with clamps series:
- TH, H, U, B for Ø 14x2;
- TH, H, U, B, F for Ø 16x2 - 18x2 and 20x2;
- TH, H, B for Ø 26x3;
- TH, H for Ø 32x3;
- TH for Ø 40x3.5 - 50x4 e 63x4.5

Externally nickel-plated brass body
Elastomer seals
Stainless steel pipe clamping bush
Dielectric pipe clamp cover in PE
Angle threaded connection F UNI-EN-ISO 228
Max operating temperature 95 °C
Max operating pressure 10 Bar

CSTB (only ø 16x2 - 20x2 - 26x3 - 32x3 / Certification applicable only if matched with CSTB certified "RBM TITA-FIX" pipe). - EN ISO 21003 2/10, 4/6, 5/6 bar

Press fitting for multilayer pipe - angle - female gas connection
Raccord à sertir pour tube multicouche - en angle - branchement femelle gaz
Пресс-фитинг для металлопластиковых труб - угловой -резьба вн.
Racord prin presare pentru conductă multistrat – cu cot – prindere tip mamă gaz
Racor Press Fitting curvo hembra, para tubo multicapa
Steckanschluss für Mehrschichtverbundrohr - Winkel - Aufsteckanschluss Gas

Code	Size A	Size B	Pack	Carton
675.14.20	14x2	1/2" F	10	200
675.16.20	16x2	1/2" F	10	200
675.18.20	18x2	1/2" F	10	160
675.18.30	18x2	3/4" F	10	160
675.20.20	20x2	1/2" F	10	160
675.20.30	20x2	3/4" F	10	120
675.26.30	26x3	3/4" F	5	80
675.32.40	32x3	1" F	5	60
675.40.50	40x3,5	1"1/4 F	5	40
675.50.60	50x4	1"1/2 F	1	20

Size A: Outside Ø x pipe thickness

032

676



Press fitting for Tita-fix multilayer pipe.

Multi-clamp fitting.
Compatible with clamps series:
- TH, H, U, B for Ø 14x2;
- TH, H, U, B, F for Ø 16x2 - 18x2 and 20x2;
- TH, H, B for Ø 26x3;
- TH, H for Ø 32x3;
- TH for Ø 40x3.5 - 50x4 e 63x4.5

Externally nickel-plated brass body
Elastomer seals
Stainless steel pipe clamping bush
Dielectric pipe clamp cover in PE
Angle threaded connection F UNI-EN-ISO 228
Max operating temperature 95 °C
Max operating pressure 10 Bar

CSTB (only ø 16x2 - 20x2 - 26x3 - 32x3 / Certification applicable only if matched with CSTB certified "RBM TITA-FIX" pipe). - EN ISO 21003 2/10, 4/6, 5/6 bar

Press fitting for multilayer pipe - angle - male gas connection
Raccord à sertir pour tube multicouche - en angle - branchement mâle gaz
Пресс-фитинг для металлопластиковых труб- угловой - резьба нар.
Racord prin presare pentru conductă multistrat – cu cot – prindere tip tată gaz
Racor Press Fitting curvo macho, para tubo multicapa
Druckanschluss für Mehrschichtverbundrohr - Bogen - Steckverbindung

Code	Size A	Size B	Pack	Carton
676.14.20	14x2	1/2" M	10	200
676.16.20	16x2	1/2" M	10	200
676.18.20	18x2	1/2" M	10	200
676.18.30	18x2	3/4" M	10	160
676.20.20	20x2	1/2" M	10	160
676.20.30	20x2	3/4" M	10	160
676.26.30	26x3	3/4" M	10	80
676.32.40	32x3	1" M	5	60
676.40.50	40x3,5	1"1/4" M	5	32

Size A: Outside Ø x pipe thickness

032

677



Press fitting for Tita-fix multilayer pipe.

Multi-clamp fitting.
Compatible with clamps series:
- TH, H, U, B for Ø 14x2;
- TH, H, U, B, F for Ø 16x2 - 18x2 and 20x2;
- TH, H, B for Ø 26x3;
- TH, H for Ø 32x3;
- TH for Ø 40x3.5 - 50x4 e 63x4.5

Externally nickel-plated brass body
Elastomer seals
Stainless steel pipe clamping bush
Dielectric pipe clamp cover in PE
Max operating temperature 95 °C
Max operating pressure 10 Bar

CSTB (only ø 16x2 - 20x2 - 26x3 - 32x3 / Certification applicable only if matched with CSTB certified "RBM TITA-FIX" pipe). - EN ISO 21003 2/10, 4/6, 5/6 bar

Press fitting for multilayer pipe - T-shaped - intermediate
Raccord à sertir pour tube multicouche - en « T » - intermédiaire
Пресс-фитинг для многослойной трубы - "T"-образный - промежуточный
Racord de presare pentru tub multistrat - în „T" - intermediar
Racor para prensar, para tubo multicapa - en "T" - intermedio
Druckanschluss für Mehrschichtverbundrohr - "T"-Verbindung - Zwischenstück

Code	Size A	Pack	Carton
677.14.00	14x2	10	120
677.16.00	16x2	10	120
677.18.00	18x2	5	80
677.20.00	20x2	10	80
677.26.00	26x3	5	40
677.32.00	32x3	5	40
677.40.00	40x3,5	5	20
677.50.00	50x4	1	8
677.63.00	63x4,5	1	8

Size A: Outside Ø x pipe thickness

032

678



Press fitting for Tita-fix multilayer pipe.

Multi-clamp fitting.
Compatible with clamps series:
- TH, H, U, B for Ø 14x2;
- TH, H, U, B, F for Ø 16x2 - 18x2 and 20x2;
- TH, H, B for Ø 26x3;
- TH, H for Ø 32x3;
- TH for Ø 40x3.5 - 50x4 e 63x4.5

Externally nickel-plated brass body
Elastomer seals
Stainless steel pipe clamping bush
Dielectric pipe clamp cover in PE
Threaded connection F UNI-EN-ISO 228
Max operating temperature 95 °C
Max operating pressure 10 Bar

CSTB (only ø 16x2 - 20x2 - 26x3 - 32x3 / Certification applicable only if matched with CSTB certified "RBM TITA-FIX" pipe). - EN ISO 21003 2/10, 4/6, 5/6 bar

Press fitting for multilayer pipe - T-shaped - gas central female connection
Raccord à sertir pour tube multicouche - en « T » - raccord femelle central gaz
Пресс-фитинг для многослойной трубы - "T"-образный - центральное крепление с внутренней резьбой gas
Racord de presare pentru tub multistrat - în „T" - prindere mamă centrală gaz
Racor para prensar, para tubo multicapa - en "T" - conexión hembra central gas
Druckanschluss für Mehrschichtverbundrohr - "T"-Verbindung - mittlerer Gas-Aufsteckanschluss

Code	Size A	Size B	Pack	Carton
678.14.20	14x2	1/2" F	10	120
678.16.20	16x2	1/2" F	10	120
678.18.20	18x2	1/2" F	5	80
678.18.30	18x2	3/4" F	5	80
678.20.20	20x2	1/2" F	10	80
678.20.30	20x2	3/4" F	10	80
678.26.30	26x3	3/4" F	5	60
678.32.30	32x3	3/4" F	5	40
678.32.40	32x3	1" F	5	40
678.40.40	40x3,5	1" F	5	20
678.40.50	40x3,5	1"1/4 F	5	24
678.50.40	50x4	1" F	1	12

Size A: Outside Ø x pipe thickness

032

679



Press fitting for Tita-fix multilayer pipe.

Multi-clamp fitting.
Compatible with clamps series:
- TH, H, U, B for Ø 14x2;
- TH, H, U, B, F for Ø 16x2 - 18x2 and 20x2;
- TH, H, B for Ø 26x3;
- TH, H for Ø 32x3;
- TH for Ø 40x3.5 - 50x4 e 63x4.5

Externally nickel-plated brass body
Elastomer seals
Stainless steel pipe clamping bush
Dielectric pipe clamp cover in PE
Threaded connection F UNI-EN-ISO 228
Max operating temperature 95 °C
Max operating pressure 10 Bar

CSTB (only ø 16x2 - 20x2 - 26x3 - 32x3 / Certification applicable only if matched with CSTB certified "RBM TITA-FIX" pipe). - EN ISO 21003 2/10, 4/6, 5/6 bar

Press fitting for multilayer pipe - T-shaped - gas side female connection
Raccord à sertir pour tube multicouche - en « T » - raccord femelle latéral gaz
Пресс-фитинг для многослойной трубы - "T"-образный - боковое крепление с внутренней резьбой gas
Racord de presare pentru tub multistrat - în „T" - prindere mamă laterală gaz
Racor para prensar, para tubo multicapa - en "T" - conexión hembra lateral gas
Druckanschluss für Mehrschichtverbundrohr - "T"-Verbindung - seitlicher Gas-Aufsteckanschluss

Code	Size A	Size B	Pack	Carton
679.14.20	14x2	1/2" F	10	60
679.16.20	16x2	1/2" F	10	60
679.18.20	18x2	1/2" F	10	60
679.18.30	18x2	3/4" F	10	60
679.20.20	20x2	1/2" F	10	60
679.20.30	20x2	3/4" F	10	60
679.26.30	26x3	3/4" F	10	40
679.32.40	32x3	1" F	5	30

Size A: Outside Ø x pipe thickness

032

680



Press fitting for Tita-fix multilayer pipe.

Multi-clamp fitting.
Compatible with clamps series:
- TH, H, U, B for Ø 14x2;
- TH, H, U, B, F for Ø 16x2 - 18x2 and 20x2;
- TH, H, B for Ø 26x3;
- TH, H for Ø 32x3;
- TH for Ø 40x3.5 - 50x4 e 63x4.5

Externally nickel-plated brass body
Elastomer seals
Stainless steel pipe clamping bush
Dielectric pipe clamp cover in PE
Threaded connection M UNI-EN-ISO 228
Max operating temperature 95 °C
Max operating pressure 10 Bar

CSTB (only ø 16x2 - 20x2 - 26x3 - 32x3 / Certification applicable only if matched with CSTB certified "RBM TITA-FIX" pipe). - EN ISO 21003 2/10, 4/6, 5/6 bar

Press fitting for multilayer pipe - T-shaped - gas central male connection
Raccord à sertir pour tube multicouche - en « T » - raccord mâle central gaz
Пресс-фитинг для многослойной трубы - "T"-образный - центральное крепление с наружной резьбой gas
Racord de presare pentru tub multistrat - în „T" - prindere tată centrală gaz
Racor para prensar, para tubo multicapa - en "T" - conexión macho central gas
Druckanschluss für Mehrschichtverbundrohr - "T"-Verbindung - mittlerer Gas-Steckanschluss

Code	Size A	Size B	Pack	Carton
680.14.20	14x2	1/2" M	10	120
680.16.20	16x2	1/2" M	10	120
680.18.20	18x2	1/2" M	10	80
680.18.30	18x2	3/4" M	10	80
680.20.20	20x2	1/2" M	10	80
680.20.30	20x2	3/4" M	10	80
680.26.30	26x3	3/4" M	5	60
680.26.40	26x3	1" M	5	60
680.32.30	32x3	3/4" M	5	40
680.32.40	32x3	1" M	5	40
680.40.40	40x3,5	1" M	5	20
680.40.50	40x3,5	1"1/4 M	5	20

Size A: Outside Ø x pipe thickness

032

890



Press fitting for Tita-fix multilayer pipe.

Multi-clamp fitting.
Compatible with clamps series:
- TH, H, U, B for Ø 14x2;
- TH, H, U, B, F for Ø 16x2 - 18x2 and 20x2;
- TH, H, B for Ø 26x3;
- TH, H for Ø 32x3;
- TH for Ø 40x3.5 - 50x4 e 63x4.5

Externally nickel-plated brass body
Elastomer seals
Stainless steel pipe clamping bush
Dielectric pipe clamp cover in PE
Max operating pressure 95°C
Max operating pressure 10 Bar

CSTB (only ø 16x2 - 20x2 - 26x3 - 32x3 / Certification applicable only if matched with CSTB certified "RBM TITA-FIX" pipe). - EN ISO 21003 2/10, 4/6, 5/6 bar

Press fitting for multilayer pipe - straight - reduced route
Raccord à sertir pour tube multicouche - droit - voie réduite
Пресс-фитинг для металлопластиковых труб- прямой - редукционный
Racord cu presare pentru conductă multistrat - drept – canal redus
Manguito Press Fitting recto reducido, para tubo multicapa
Druckanschluss für Mehrschichtverbundrohr - gerade - Reduzierstück

Code	Size A	Size B	Pack	Carton
890.16.00	16x2	14x2	10	240
890.18.00	18x2	14x2	10	240
890.18.10	18x2	16x2	10	240
890.20.10	20x2	16x2	10	240
890.20.20	20x2	18x2	10	240
890.26.00	26x3	16x2	10	160
890.26.10	26x3	18x2	10	160
890.26.20	26x3	20x2	10	160
890.32.00	32x3	16x2	5	120
890.32.10	32x3	20x2	5	120
890.32.20	32x3	26x3	5	120
890.40.10	40x3,5	32x3	5	40
890.50.10	50x4	32x3	5	40
890.50.00	50x4	40x3,5	5	40
890.63.10	63x4,5	40x3,5	1	4
890.63.00	63x4,5	50x4	1	4

Size A-B: Outside Ø x pipe thickness

032

851



Press fitting for Tita-fix multilayer pipe.

Multi-clamp fitting.
Compatible with clamps series:
- TH, H, U, B for Ø 14x2;
- TH, H, U, B, F for Ø 16x2 - 18x2 and 20x2;
- TH, H, B for Ø 26x3;
- TH, H for Ø 32x3;
- TH for Ø 40x3.5 - 50x4 e 63x4.5

Externally nickel-plated brass body
Elastomer seals
Stainless steel pipe clamping bush
Dielectric pipe clamp cover in PE
Max operating pressure 95°C
Max operating pressure 10 Bar

CSTB (only ø 16x2 - 20x2 - 26x3 - 32x3 / Certification applicable only if matched with CSTB certified "RBM TITA-FIX" pipe). - EN ISO 21003 2/10, 4/6, 5/6 bar

Press fitting for multilayer pipe - T-shaped - reduced lateral way
Raccord à sertir pour tube multicouche - en « T » - voie réduite latérale
Пресс-фитинг для многослойной трубы - "T"-образный - уменьшенный боковой ход
Racord de presare pentru tub multistrat - în „T" - cale redusă laterală
Racor para prensar, para tubo multicapa - en "T" - vía reducida lateral
Druckanschluss für Mehrschichtverbundrohr - "T"-Verbindung - seitliches Reduzierstück

Code	Size A	Size B	Pack	Carton
851.16.00	16x2	14x2	10	80
851.20.10	20x2	16x2	10	80
851.26.10	26x3	16x2	5	60
851.26.20	26x3	20x2	5	60
851.32.10	32x3	16x2	5	40
851.32.00	32x3	20x2	5	40
851.32.20	32x3	26x3	5	40

Size A-B: Outside Ø x pipe thickness

032

851



Press fitting for Tita-fix multilayer pipe.

Multi-clamp fitting.
Compatible with clamps series:
- TH, H, U, B for Ø 14x2;
- TH, H, U, B, F for Ø 16x2 - 18x2 and 20x2;
- TH, H, B for Ø 26x3;
- TH, H for Ø 32x3;
- TH for Ø 40x3.5 - 50x4 e 63x4.5

Externally nickel-plated brass body
Elastomer seals
Stainless steel pipe clamping bush
Dielectric pipe clamp cover in PE
Max operating pressure 95°C
Max operating pressure 10 Bar

CSTB (only ø 16x2 - 20x2 - 26x3 - 32x3 / Certification applicable only if matched with CSTB certified "RBM TITA-FIX" pipe). - EN ISO 21003 2/10, 4/6, 5/6 bar

Press fitting for multilayer pipe - T-shaped - reduced central way
Raccord à sertir pour tube multicouche - en « T » - voie réduite centrale
Пресс-фитинг для многослойной трубы - "T"-образный - уменьшенный центральный ход
Racord de presare pentru tub multistrat - în „T" - cale redusă centrală
Racor para prensar, para tubo multicapa - en "T" - vía reducida central
Druckanschluss für Mehrschichtverbundrohr - "T"-Verbindung - mittleres Reduzierstück

Code	Size A	Size B	Pack	Carton
851.14.00	16x2	14x2	10	80
851.14.20	18x2	14x2	10	80
851.16.20	18x2	16x2	10	80
851.14.50	20x2	14x2	10	80
851.16.30	20x2	16x2	10	80
851.18.00	20x2	18x2	5	80
851.16.60	26x3	16x2	5	60
851.18.20	26x3	18x2	10	60
851.20.20	26x3	20x2	5	60
933.16.00	32x3	16x2	5	40
851.18.30	32x3	18x2	5	40
851.20.40	32x3	20x2	5	40
851.26.00	32x3	26x3	5	40
851.40.10	40x3,5	26x3	1	20
851.40.00	40x3,5	32x3	5	20
851.50.20	50x4	26x3	1	12
851.50.00	50x4	40x3,5	1	12
851.63.40	63x4,5	26x3	1	8
851.63.20	63x4,5	40x3,5	1	8

Size A-B: Outside Ø x pipe thickness

032

851



Press fitting for Tita-fix multilayer pipe.

Multi-clamp fitting.
Compatible with clamps series:
- TH, H, U, B for Ø 14x2;
- TH, H, U, B, F for Ø 16x2 - 18x2 and 20x2;
- TH, H, B for Ø 26x3;
- TH, H for Ø 32x3;
- TH for Ø 40x3.5 - 50x4 e 63x4.5

Externally nickel-plated brass body
Elastomer seals
Stainless steel pipe clamping bush
Dielectric pipe clamp cover in PE
Max operating pressure 95°C
Max operating pressure 10 Bar

CSTB (only ø 16x2 - 20x2 - 26x3 - 32x3 / Certification applicable only if matched with CSTB certified "RBM TITA-FIX" pipe). - EN ISO 21003 2/10, 4/6, 5/6 bar

Press fitting for multilayer pipe - T-shaped - reduced central and lateral way
Raccord à sertir pour tube multicouche - en « T » - voie réduite centrale et latérale
Пресс-фитинг для многослойной трубы - "T"-образный - уменьшенный центральный и боковой ход
Racord de presare pentru tub multistrat - în „T" - cale redusă centrală și laterală
Racor para prensar, para tubo multicapa - en "T" - vía reducida central y lateral
Druckanschluss für Mehrschichtverbundrohr - "T"-Verbindung - mittleres und seitliches Reduzierstück

Code	Size A	Size B	Pack	Carton
851.14.10	16x2	14x2	10	80
851.16.40	18x2	16x2	10	80
851.16.10	20x2	16x2	10	80
851.18.10	20x2	18x2	5	80
851.16.90	26x3	16x2	5	60
851.20.70	26x3	20x2	5	60
851.20.90	32x3	20x2	5	40
851.26.40	32x3	26x3	5	40

Size A-B: Outside Ø x pipe thickness

032

851



Press fitting for Tita-fix multilayer pipe.

Multi-clamp fitting.
Compatible with clamps series:
- TH, H, U, B for Ø 14x2;
- TH, H, U, B, F for Ø 16x2 - 18x2 and 20x2;
- TH, H, B for Ø 26x3;
- TH, H for Ø 32x3;
- TH for Ø 40x3.5 - 50x4 e 63x4.5

Externally nickel-plated brass body
Elastomer seals
Stainless steel pipe clamping bush
Dielectric pipe clamp cover in PE
Max operating pressure 95°C
Max operating pressure 10 Bar

CSTB (only ø 16x2 - 20x2 - 26x3 - 32x3 / Certification applicable only if matched with CSTB certified "RBM TITA-FIX" pipe).

EN ISO 21003 2/10, 4/6, 5/6 bar

032

Press fitting for multilayer pipe - T-shaped - reduced lateral double way
Raccord à sertir pour tube multicouche - en « T » - double voie réduite latérale
Пресс-фитинг для многослойной трубы - "T"-образный - двойной уменьшенный боковой ход
Racord de presare pentru tub multistrat - în „T" - cale dublă redusă laterală
Racor para prensar, para tubo multicapa - en "T" - doble vía reducida lateral
Druckanschluss für Mehrschichtverbundrohr - "T"-Verbindung - doppeltes seitliches Reduzierstück

Code	Size A	Size B	Pack	Carton
851.18.40	18x2	16x2	5	80
851.20.00	20x2	16x2	10	80
851.26.50	26x3	20x2	5	60
851.32.30	32x3	26x3	5	40

Size A-B: Outside Ø x pipe thickness

999



Press fitting for Tita-fix multilayer pipe.

Multi-clamp fitting.
Compatible with clamps series:
- TH, H, U, B for Ø 14x2;
- TH, H, U, B, F for Ø 16x2 - 18x2 and 20x2;
- TH, H, B for Ø 26x3;
- TH, H for Ø 32x3;
- TH for Ø 40x3.5 - 50x4 e 63x4.5

Externally nickel-plated brass body
Elastomer seals
Stainless steel pipe clamping bush
Dielectric pipe clamp cover in PE
Max operating pressure 95°C
Max operating pressure 10 Bar

CSTB (only ø 16x2 - 20x2 - 26x3 - 32x3 / Certification applicable only if matched with CSTB certified "RBM TITA-FIX" pipe). - EN ISO 21003 2/10, 4/6, 5/6 bar

032

Press fitting for multilayer pipe -T-shaped - triple reduction
Raccord à sertir pour tube multicouche - en « T » - triple réduction
Пресс-фитинг для многослойной трубы - "T"-образный - тройное уменьшение
Racord de presare pentru tub multistrat - în „T" - triplă reducție
Racor para prensar, para tubo multicapa - en "T" - triple reducción
Druckanschluss für Mehrschichtverbundrohr - "T"-Verbindung - dreifaches Reduzierstück

Code	Size A	Size B	Measurement C	Pack	Carton
999.20.00	26x3	20x2	16x2	10	40

Size A-B-C: Outside Ø x pipe thickness

853



Press fitting for Tita-fix multilayer pipe.

Multi-clamp fitting.
Compatible with clamps series:
- TH, H, U, B for Ø 14x2;
- TH, H, U, B, F for Ø 16x2 - 18x2 and 20x2;
- TH, H, B for Ø 26x3;
- TH, H for Ø 32x3;
- TH for Ø 40x3.5 - 50x4 e 63x4.5

Externally nickel-plated brass body
Elastomer seals
Stainless steel pipe clamping bush
Dielectric pipe clamp cover in PE
Threaded connection F UNI-EN-ISO 228
Max operating pressure 95°C
Max operating pressure 10 Bar

CSTB (only ø 16x2 - 20x2 - 26x3 - 32x3 / Certification applicable only if matched with CSTB certified "RBM TITA-FIX" pipe). - EN ISO 21003 2/10, 4/6, 5/6 bar

Press fitting for multilayer pipe - flanged elbow - standard length - F Gas connection
Raccord à sertir pour tube multicouche - coudé à bride - longueur standard - branchement F Gaz
Пресс-фитинг для металлопластиковых труб - фланцевое колено - стандартная длина - резьба вн.
Racord prin presare pentru conductă multistrat – cu cot prevăzut cu flanșă – lungime standard - prindere tip Mamă gaz
Racor Press Fitting curvo hembra con base de soporte, para tubo multicapa
Steckanschluss für Mehrschichtverbundrohr - geflanschter Bogen - Standardlänge - Anschluss F Gas

Code	Size A	Size B	Pack	Carton
853.04.00	16x2	1/2" F	10	60
853.04.20	18x2	1/2" F	10	60
853.04.10	20x2	1/2" F	10	60

Size A: Outside Ø x pipe thickness

Fixing on specific Fixing Plate code 934.00.00

032

853



Press fitting for Tita-fix multilayer pipe.

Multi-clamp fitting.
Compatible with clamps series:
- TH, H, U, B for Ø 14x2;
- TH, H, U, B, F for Ø 16x2 - 18x2 and 20x2;
- TH, H, B for Ø 26x3;
- TH, H for Ø 32x3;
- TH for Ø 40x3.5 - 50x4 e 63x4.5

Externally nickel-plated brass body
Elastomer seals
Stainless steel pipe clamping bush
Dielectric pipe clamp cover in PE
Threaded connection F UNI-EN-ISO 228
Max operating pressure 95°C
Max operating pressure 10 Bar

CSTB (only ø 16x2 - 20x2 - 26x3 - 32x3 / Certification applicable only if matched with CSTB certified "RBM TITA-FIX" pipe). - EN ISO 21003 2/10, 4/6, 5/6 bar

Press fitting for multilayer pipe - flanged elbow - XL length 77 mm - F Gas connection
Raccord à sertir pour gaz pour tube multicouche - coudé à bride - longueur XL 77 mm - branchement F Gaz
Пресс-фитинг для металлопластиковых труб - фланцевое колено - стандартная длина - резьба вн.
Racord prin presare pentru conductă multistrat – cu cot prevăzut cu flanșă – lungime XL 77 mm - prindere tip Mamă gaz
Racor Press Fitting curvo hembra con base de soporte, para tubo multicapa
Steckanschluss für Mehrschichtverbundrohr - geflanschter Bogen - länge XL 77 mm - Anschluss F Gas

Code	Size A	Size B	Pack	Carton
853.04.90	16x2	1/2" F	5	40

Size A: Outside Ø x pipe thickness

Fixing on specific Fixing Plate code 934.00.00

032

852



Press fitting for Tita-fix multilayer pipe.

Multi-clamp fitting.
Compatible with clamps series:
- TH, H, U, B for Ø 14x2;
- TH, H, U, B, F for Ø 16x2 - 18x2 and 20x2;
- TH, H, B for Ø 26x3;
- TH, H for Ø 32x3;
- TH for Ø 40x3.5 - 50x4 e 63x4.5

Externally nickel-plated brass body
Elastomer seals
Stainless steel pipe clamping bush
Dielectric pipe clamp cover in PE
Threaded connection F UNI-EN-ISO 228
Max operating pressure 95°C
Max operating pressure 10 Bar

CSTB (only ø 16x2 - 20x2 - 26x3 - 32x3 / Certification applicable only if matched with CSTB certified "RBM TITA-FIX" pipe). - EN ISO 21003 2/10, 4/6, 5/6 bar

Press fitting for multilayer pipe - flanged - F gas connection
Raccord à sertir pour tube multicouche - à bride - branchement F Gaz
Пресс-фитинг для металлопластиковых труб - фланцевый - резьба вн.
Racord prin presare pentru conductă multistrat – cu flanșă – prindere tip Mamă gaz
Racor Press Fitting recto hembra con base de soporte, para tubo multicapa
Steckanschluss für Mehrschichtverbundrohr - geflanscht - Anschluss F Gas

Code	Size A	Size B	Pack	Carton
852.04.00	16x2	1/2" F	10	60
852.04.30	20x2	1/2" F	5	60

Size A: Outside Ø x pipe thickness

Fixing on specific Fixing Plate code 934.00.00

032

934



Flanged fittings fixing plate.

Galvanised steel material
Flanged fitting application with prefixed centre distance of 80-100-120-150-160 mm
Possibility of choosing bracket attachments at only centre distance 80 mm

Fixing plate
Plaque de fixation
Крепежная пластина
Placă de fixare
Placa de montaje para racor con base de soporte
Befestigungsplatte

Code	Pack	Carton
934.00.00	1	6

032

934



Fixing and positioning bracket.

Galvanised steel material
Complete with fixing nut

Fixing on specific Fixing Plate code 934.00.00

Fixing bracket
Étrier de fixation
Монтажная планка
Bridă de fixare
Soporte de fijación y posicionamiento
Befestigungsbügel

Code	Pack	Carton
934.00.50	1	6

032

1253

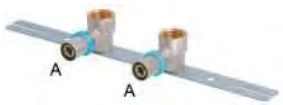

Brackets with press fitting for Tita-fix multilayer pipe.

Multi-clamp fitting.
Compatible with clamps series:
- TH, H, U, B for Ø 14x2;
- TH, H, U, B, F for Ø 16x2 - 18x2 and 20x2;
- TH, H, B for Ø 26x3;
- TH, H for Ø 32x3;
- TH for Ø 40x3.5 - 50x4 e 63x4.5

Externally nickel-plated brass body
Elastomer seals
Stainless steel pipe clamping bush
Dielectric pipe clamp cover in PE
Threaded connection F UNI-EN-ISO 228
Galvanised steel bracket
Fittings applied at prefixed interest
Fittings free to rotate
Connection G 1/2" F

Brackets with press fittings for multilayer pipe
Étriers avec raccords à sertir pour tube multicouche
Хомуты с пресс-фитингами для металлопластиковых труб
Bride cu racorduri prin presare pentru conductă multistrat
Soporte de fijación con par de racores Press Fitting curvo hembra con base de soporte, para tubo multicapa
Bügel mit Steckanschlüsse für Mehrschichtverbundrohr

Code	Size A	Centre distance (mm)	Pack	Carton
1253.04.00	16x2	80	5	20
1253.04.20	16x2	150	5	20
1253.04.10	16x2	160	5	20
1253.04.60	20x2	150	5	20
1253.04.50	20x2	160	5	20

Size A: Outside Ø x pipe thickness

032

20



Recessed shut-off cock with chrome-plated plug and press fittings for Tita-fix multilayer pipe.

Multi-clamp fitting.
Compatible with clamps series:
- TH, H, U, B for Ø 14x2;
- TH, H, U, B, F for Ø 16x2 - 18x2 and 20x2;
- TH, H, B for Ø 26x3;
- TH, H for Ø 32x3;
- TH for Ø 40x3.5 - 50x4 e 63x4.5

Brass body
Chrome plated cap and manoeuvre knob
Elastomer seals
Press connections with dielectric cover in PE and stainless steel pipe clamping bush
Max operating temperature 95 °C
Max operating pressure 10 Bar

30 mm extension for spacer fitting kit available. See spare parts pricelist. Product code 3516.00.02

Recessed shut-off cock with chrome-plated plug and press fittings for multilayer pipe
Vanne d'arrêt à encastrer avec capuchon chromé et raccords à sertir pour tube multicouche
Встраиваемый стопорный кран с хромированным колпаком и пресс-фитингами для многослойной трубы
Robinet de oprire încastrabil cu capac cromat şi racorduri de presare pentru tub multistrat
Grifo de bloqueo empotrado con capucha cromado y racores para prensar para tubo multicapa
Einbausperrhahn mit verchromter Kappe und Druckanschlüsse für Mehrschichtverbundrohr

Code	Size A	Size B	Pack	Carton
20.04.10	16x2	1/2"	5	30
20.05.10	20x2	3/4"	3	30
20.05.20*	26x3	3/4"	3	30

**Fitting supplied disassembled*

032

RBM PRESS FITTING "TITA-FIX"

BEST QUALITY GUARANTEED!



DOUBLE O-RING SEAL

Every fitting is equipped with 2 O-Rings: perfect tightness during the time!

PIPE SOCKET MADE IN STAINLESS STEEL

Stainless steel gives an higher system rigidity than aluminium. Furthermore, being stainless steel resistant to corrosion, it is possible to use RBM fitting "laid underfloor or wall", too.

"ANTI PULL-OUT" SYSTEM

Specific fishbone shape of fitting body allows and higher grip to the pipe, avoiding pull-out of the pipe in the compression action.

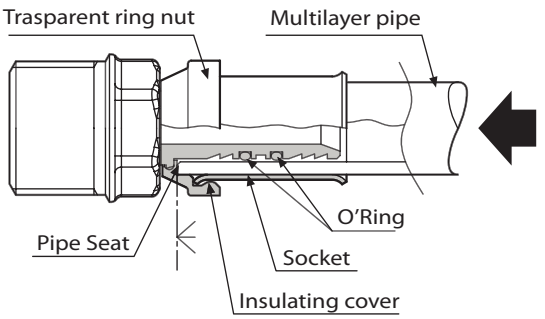

TRASPARENT PLASTIC RING NUT

Trasparent plastic ring nut allows to verify correct pipe positioning into the fitting. Produced in one piece only (without hole), therefore resistant to possible strikes.



PERFECT COMPRESSION SYSTEM

Ring nut finds the perfect seat in the TH series plier (recommended series). This makes the compression easier, ensuring that the fitting will not move.





Exact position of the press-fitting (profile TH plier).

MULTIPLIER PRESS-FITTINGS

RBM press fittings can be used with different plier profiles:

- TH, H, U, B ø 14x2;
- TH, H, U, B, F ø 16x2, 18x2, 20x2;
- TH, H, B ø 26x3;
- TH, H ø 32x3;
- TH ø 40x3,5, 50x4, 63x4,5.

Compression of press-fitting for gas fuel system must be done exclusively with TH profile plier!

1930



Compression fitting for multilayer pipe.

Nickel plated brass body and nut.
Brass pipe clip ring nut.
Elastomer gaskets.

- Max operating temperature 95 °C
- Max operating pressure 10 Bar

Suitable for polyethylene and multilayer pipe.

Compression fittings for multilayer straight - intermediate pipe
Raccords à visser pour tube multicouche droit - intermédiaire
Прямой обжимной фитинг промежуточный для металлопластиковых труб
Racorduri de strângere pentru conductă multistrat dreaptă – intermediară
Manguito recto con adaptadores para tubo multicapa
Steckanschlüsse für Mehrschichtverbundrohr - gerade - Zwischenstück

Code	Size A	Pack	Carton
1930.14.02	14x2	10	180
1930.16.02	16x2	10	180
1930.18.02	18x2	10	150
1930.20.02	20x2	10	120
1930.26.02	26x3	5	75
1930.32.02	32x3	5	35

Size A: Outside Ø x pipe thickness

046

1929



Compression fitting for multilayer pipe.

Nickel plated brass body and nut.
Brass pipe clip ring nut.
Elastomer gaskets.

- Size A: Pipe outside diameter
- Size B: Thread UNI-EN-ISO 228.
- Max operating temperature 95 °C
- Max operating pressure 10 Bar

Suitable for polyethylene and multilayer pipe.

Compression fittings for straight multilayer pipe - female gas connection
Raccords à visser pour tube multicouche droit -branchement femelle gaz
Прямой обжимной фитинг для металлопластиковых труб, резьба нар. G
Racorduri de strângere pentru conductă multistrat dreaptă – prindere tip mamă gaz
Racor recto Hembra con adaptador para tubo multicapa
Steckanschluss für Kupferrohr gerade - Aufsteckanschluss Gas

Code	Size A	Size B	Pack	Carton
1929.14.02	14x2	1/2" F	10	300
1929.16.02	16x2	1/2" F	10	250
1929.16.12	16x2	3/4" F	10	160
1929.18.02	18x2	1/2" F	10	160
1929.18.12	18x2	3/4" F	10	140
1929.20.02	20x2	1/2" F	10	150
1929.20.12	20x2	3/4" F	10	140
1929.26.12	26x3	3/4" F	5	70
1929.26.22	26x3	1" F	5	70
1929.32.22	32x3	1" F	5	50

046

1928



Compression fitting for multilayer pipe.

Nickel plated brass body and nut.
Brass pipe clip ring nut.
Elastomer gaskets.

- Max operating temperature 95 °C
- Max operating pressure 10 Bar

Suitable for polyethylene and multilayer pipe.

Compression fittings for straight multilayer pipe - male gas connection
Raccords à visser pour tube multicouche droit -branchement mâle gaz
Прямой обжимной фитинг для металлопластиковых труб, резьба вн. G
Racorduri de strângere pentru conductă multistrat dreaptă – prindere tip tată gaz
Racor recto Macho con adaptador para tubo multicapa
Steckanschluss für Kupferrohr gerade - Steckverbindung Gas

Code	Size A	Size B	Pack	Carton
1928.14.02	14x2	1/2" M	10	300
1928.16.02	16x2	1/2" M	10	300
1928.16.12	16x2	3/4" M	10	160
1928.18.02	18x2	1/2" M	10	160
1928.18.12	18x2	3/4" M	10	160
1928.20.02	20x2	1/2" M	10	150
1928.20.12	20x2	3/4" M	10	150
1928.26.12	26x3	3/4" M	5	80
1928.26.22	26x3	1" M	5	80
1928.32.22	32x3	1" M	5	50

Size A: Outside Ø x pipe thickness
Size B: thread UNI-EN-ISO 228

046

1934



Compression fitting for multilayer pipe.

Nickel plated brass body and nut.
Brass pipe clip ring nut.
Elastomer gaskets.

- Max operating temperature 95 °C
- Max operating pressure 10 Bar

Suitable for polyethylene and multilayer pipe.

Compression fittings for angle - intermediate multilayer pipe
Raccords à visser pour tube multicouche en angle - intermédiaire
Угловой обжимной фитинг промежуточный для металлопластиковых труб
Racorduri de strângere pentru conductă multistrat cu cot – intermediară
Codo 90° con adaptadores para tubo multicapa
Steckanschlüsse für Kupferrohr gewinkelt - Zwischenstück

Code	Size A	Pack	Carton
1934.14.02	14x2	10	200
1934.16.02	16x2	10	160
1934.18.02	18x2	10	100
1934.20.02	20x2	10	100
1934.26.02	26x3	5	50
1934.32.02	32x3	5	25

Size A: Outside Ø x pipe thickness

046

1935



Compression fitting for multilayer pipe.

Nickel plated brass body and nut.
Brass pipe clip ring nut.
Elastomer gaskets.

- Max operating temperature 95 °C
- Max operating pressure 10 Bar

Suitable for polyethylene and multilayer pipe.

Compression fittings for angle multilayer pipe - female gas connection
Raccords à visser pour tube multicouche en angle -branchement femelle gaz
Угловой обжимной фитинг для металлопластиковых труб, резьба вн. G
Racorduri de strângere pentru conductă multistrat cu cot – prindere tip mamă gaz
Racor curvo Hembra con adaptador para tubo multicapa
Steckanschluss für Mehrschichtverbundrohr - Bogen - Steckverbindung

Code	Size A	Size B	Pack	Carton
1935.14.02	14x2	1/2" F	10	180
1935.16.02	16x2	1/2" F	10	160
1935.16.12	16x2	3/4" F	10	120
1935.18.02	18x2	1/2" F	10	120
1935.18.12	18x2	3/4" F	10	100
1935.20.02	20x2	1/2" F	10	120
1935.20.12	20x2	3/4" F	10	100
1935.26.12	26x3	3/4" F	5	60
1935.26.22	26x3	1" F	5	50
1935.32.22	32x3	1" F	5	25

Size A: Outside Ø x pipe thickness
Size B: thread UNI-EN-ISO 228

046

1936



Compression fitting for multilayer pipe.

Nickel plated brass body and nut.
Brass pipe clip ring nut.
Elastomer gaskets.

- Max operating temperature 95 °C
- Max operating pressure 10 Bar

Suitable for polyethylene and multilayer pipe.

Compression fittings for angle multilayer pipe - male gas connection
Raccords à visser pour tube multicouche en angle -branchement mâle gaz
Угловой обжимной фитинг для металлопластиковых труб, резьба нар. G
Racorduri de strângere pentru conductă multistrat cu cot – prindere tip tată gaz
Racor curvo Macho con adaptador para tubo multicapa
Steckanschluss für Mehrschichtverbundrohr - Bogen - Steckverbindung

Code	Size A	Size B	Pack	Carton
1936.14.02	14x2	1/2" M	10	180
1936.16.02	16x2	1/2" M	10	180
1936.16.12	16x2	3/4" M	10	120
1936.18.02	18x2	1/2" M	10	120
1936.18.12	18x2	3/4" M	10	120
1936.20.02	20x2	1/2" M	10	120
1936.20.12	20x2	3/4" M	10	120
1936.26.12	26x3	3/4" M	5	60
1936.26.22	26x3	1" M	5	60
1936.32.22	32x3	1" M	5	30

Size A: Outside Ø x pipe thickness
Size B: thread UNI-EN-ISO 228

046

1937



Compression fitting for multilayer pipe.

Nickel plated brass body and nut.
Brass pipe clip ring nut.
Elastomer gaskets.

- Max operating temperature 95 °C
- Max operating pressure 10 Bar

Suitable for polyethylene and multilayer pipe.

Compression fittings for flanged elbow multilayer pipe - female gas connection
Raccords à visser pour tube multicouche coudé à bride branchement femelle gaz
Обжимной фитинг с фланцевым коленом, резьба вн. G
Racorduri de strângere pentru conductă multistrat cu cot cu flanșă prindere tip mamă gaz
Racor curvo Hembra con placa, con adaptadores para tubo multicapa
Steckanschluss für Mehrschichtverbundrohr gebogen geflanscht Aufsteckanschluss Gas

Code	Size A	Size B	Pack	Carton
1937.14.02	14x2	1/2″ F	10	120
1937.16.02	16x2	1/2″ F	10	120
1937.18.02	18x2	1/2″ F	10	100
1937.20.02	20x2	1/2″ F	10	100

Size A: Outside Ø x pipe thickness
Size B: thread UNI-EN-ISO 228

046

1931



Compression fitting for multilayer pipe.

Nickel plated brass body and nut.
Brass pipe clip ring nut.
Elastomer gaskets.

- Max operating temperature 95 °C
- Max operating pressure 10 Bar

Suitable for polyethylene and multilayer pipe.

Compression fittings for T-shaped- intermediate multilayer pipe
Raccords à visser pour tube multicouche en T - intermédiaire
Обжимные Т-образные фитинги промежуточные для металлопластиковых труб,
Racorduri de strângere pentru conductă multistrat în formă de T – intermediară
Te con adaptadores para tubo multicapa
Steckanschlüsse für Mehrschichtverbundrohr T-förmig - Zwischenstück

Code	Size A	Pack	Carton
1931.14.02	14x2	10	100
1931.16.02	16x2	10	100
1931.18.02	18x2	10	80
1931.20.02	20x2	5	70
1931.26.02	26x3	3	30
1931.32.02	32x3	2	16

Size A: Outside Ø x pipe thickness

046

1932



Compression fitting for multilayer pipe.

Nickel plated brass body and nut.
Brass pipe clip ring nut.
Elastomer gaskets.

- Max operating temperature 95 °C
- Max operating pressure 10 Bar

Suitable for polyethylene and multilayer pipe.

Compression fittings for T-shaped multilayer pipe - central female gas connection
Raccords à visser pour tube multicouche en T-branchement femelle central gaz
Обжимные Т-образные фитинги для металлопластиковых труб, отвод -резьба вн. G
Racorduri de strângere pentru conductă multistrat în formă de T – prindere tip mamă centrală gaz
Te Adaptador-Hembra-Adaptador para tubo multicapa
Steckanschluss für Mehrschichtverbundrohr - "T"-Verbindung - Aufsteckanschluss zentral Gas

Code	Size A	Size B	Pack	Carton
1932.14.02	14x2	1/2″ F	10	120
1932.16.02	16x2	1/2″ F	10	100
1932.16.12	16x2	3/4″ F	5	50
1932.18.02	18x2	1/2″ F	10	80
1932.18.12	18x2	3/4″ F	5	50
1932.20.02	20x2	1/2″ F	5	60
1932.20.12	20x2	3/4″ F	5	50
1932.26.12	26x3	3/4″ F	3	30
1932.26.22	26x3	1″ F	3	30
1932.32.22	32x3	1″ F	2	18

Size A: Outside Ø x pipe thickness
Size B: thread UNI-EN-ISO 228

046

1933



Compression fitting for multilayer pipe.

Nickel plated brass body and nut.
Brass pipe clip ring nut.
Elastomer gaskets.

- Max operating temperature 95 °C
- Max operating pressure 10 Bar

Suitable for polyethylene and multilayer pipe.

Compression fittings for T-shaped multilayer pipe - central male gas connection
Raccords à visser pour tube multicouche en T -branchement mâle central gaz
Обжимные Т-образные фитинги для металлопластиковых труб, отвод- резьба нар. G
Racorduri de strângere pentru conductă multistrat în formă de T – prindere tip tată centrală gaz
Te Adaptador-Macho-Adaptador para tubo multicapa
Steckanschluss für Mehrschichtverbundrohr - "T"-Verbindung - mittlerer Steckanschluss Gas

Code	Size A	Size B	Pack	Carton
1933.14.02	14x2	1/2" M	10	100
1933.16.02	16x2	1/2" M	10	100
1933.16.12	16x2	3/4" M	5	50
1933.18.02	18x2	1/2" M	10	80
1933.18.12	18x2	3/4" M	5	50
1933.20.02	20x2	1/2" M	5	60
1933.20.12	20x2	3/4" M	5	50
1933.26.12	26x3	3/4" M	3	30
1933.26.22	26x3	1" M	3	30
1933.32.22	32x3	1" M	2	18

Size A: Outside Ø x pipe thickness
Size B: thread UNI-EN-ISO 228

046

553



055

Manual shears.

Suitable for pipes in PE, PB, PP, PVC, PVDF.

Manual shears
Cisaille manuelle
Труборез
Foarfece manuale
Tijera cortatubos manual
Handschere

Code	Model	For pipe Ø	Pack	Carton
553.00.42	CS 6/35 RV	6 ÷ 35	1	1
553.00.52	CS 6/42 RV	6 ÷ 42	1	1

553



055

Manual pipe cutter.

Suitable for multiplayer, PVC and copper pipe.
Complete with deburring tool.

Manual pipe cutter
Coupe tube manuel
Ручной труборез
Instrument tăiere conducte manual
Rodina cortatubos manual
Handrohrschneider

Code	Model	For pipe Ø	Pack	Carton
553.00.62	TG 67S	6 ÷ 67	1	1
553.00.72	TG 32	6 ÷ 32	1	1

2179



055

Manual shears.

Suitable for a precise and quick cut.

Manual shears
Cisaille manuelle
Труборез
Foarfece manuale
Tijera cortatubos manual
Handschere

Code	For pipe Ø	Pack	Carton
2179.00.02	6÷26	1	1

1875



055

Manual pipe bender spring for multilayer pipe.

Prevents crushing pipe during bending operation.

Its use is recommended to correctly perform bending.

Manual pipe bender spring
Ressort cintrage manuel
Ручной гидравлический трубогиб
Resort curbare conducte manual
Muelle curvatubo manual
Manuelle Rohrbögenfeder

Code	Size	Pack	Carton
1875.14.02	Ø 14	1	1
1875.16.02	Ø 16	1	1
1875.18.02	Ø 18	1	1
1875.20.02	Ø 20	1	1
1875.26.02	Ø 26	1	1

Size: Pipe outside Ø

553



055

Hydraulic pipe bending kit, for multilayer pipe.

Prevents crushing pipe during bending operation.

Supply includes:
Manual hydraulic pump;
Shockproof containment and carrying case;
Aluminium pipe bending templates suitable for pipes with outside diameter 14-16-18-20-26-32;
Quick coupling aluminium counter templates.

Hydraulic pipe bender
Cintreuse de tubes hydraulique
Гидравлический трубогиб
Dispozitiv de curbare conductă hidraulic
Curvadora de tubos hidráulica manual a ballesta
Hydraulische Rohrbögen

Code	Pack	Carton
553.00.32	1	1

Its use is recommended to correctly perform bending.

1165



055

Wireless screwdriver drill.

Set includes:
n°1 wireless drill;
n°2 batteries, 14.4V 1.5 Ah;
n°1 battery charger for screwdriver drill;
n°1 case containing entire screwdriver drill set.

Wireless screwdriver drill
Perceuse visseuse sans fil
Беспроводная дрель
Tarod mecanism de înșurubat fără fire
Taladro-atornillador a batería
Drahtloser Elektroschrauber

Code	Pack	Carton
1165.00.02	1	1

2007



055

Knob for gauging-flaring tools.

Knob for manual use of flaring tool suitable for flaring RBM multilayer pipes.

Tool suitable for calibrating/ flaring pipes with a diameter up to 32x3. An RBM screwdriver drill with a screw drill bit is required to calibrate/flare larger diameters, code 1165.00.02

Knob for gauging-flaring tools
Poignée pour outils de calibrage-ébavurage
Ручка для калибровки
Manetă pentru ustensile de calibrare – teșitoare
Mango para Calibrador-Desbarbador interno
Regler für Kalibrierungswerkzeuge - Profilsenker

Code	Pack	Carton
2007.00.02	1	1

2006



055

Gauging-flaring tools for multilayer pipe.

Eliminates internal and external burrs and gauges the inside diameter of the pipe at the cutting zone.
Prearranged for manual use with specific knob and for use with screwdriver drill.

Gauging - Flaring tools
Outils de calibrage-ébavurage
Насадки для калибровки металлопластиковых труб
Ustensile de Calibrare – Teșitoare
Calibrador-Desbarbador interno para taladro-atornillador y Mango
Kalibrierungswerkzeuge - Profilsenker

Code	Size A	Pack	Carton
2006.14.02	Ø 14x2	1	1
2006.16.02	Ø 16x2	1	1
2006.18.02	Ø 18x2	1	1
2006.20.02	Ø 20x2	1	1
2006.26.02	Ø 26x3	1	1
2006.32.02	Ø 32x3	1	1
2006.40.02	Ø 40x3.5	1	1
2006.50.02	Ø 50x4	1	1
2006.63.02	Ø 63x4.5	1	1

Size: Outside Ø x pipe thickness.

055

2008



055

Complete set of gauging-flaring tools for multilayer pipe.

Case containing gauging and flaring tools, sizes ø 16 - 20 - 26 - 32 with specific knob for manual tool used.

Gauging - Flaring Tools Set
Jeu Outils de calibrage-ébavurage
Насадки для калибровки металлопластиковых труб
Set Ustensile de Calibrare – Teșitoare
Set completo Calibrador-Desbarbador
Bausatz Kalibrierungswerkzeuge - Profilsenker

Code	For pipe Ø	Pack	Carton
2008.00.02	Ø 16 - 20 - 26 - 32	1	1

553



Electric press for press fittings.

Electric mains power supply.
Supply complete with shockproof containment and carry case.

- Power supply 230VAC
- Weight in use 4.5Kg
- Dimensions 415x180x80 mm
- Clamps that can be coupled series TH

CE

Portable electric press
Sertisseuse électrice portative
Электрический переносной пресс
Dispozitiv presor electric portabil
Prensa hidráulica electroportatil para racores Press Fitting
Tragbare elektrische Rohrdruckpresse

Code	Pack	Carton
553.00.12	1	1

055

553



Wireless press for press fitting.

Rechargeable battery power supply.
Supply complete with shockproof containment and carry case.

- Battery 18V 4Ah
- Weight in use 3.6Kg
- Dimensions 445x125x75 mm
- Clamps that can be coupled series TH

CE

Portable wireless press
Sertisseuse sans fil portative
Переносной беспроводной пресс
Dispozitiv presor fără fire portabil
Prensa hidráulica a batería para racores Press Fitting
Tragbare drahtlose Rohrdruckpresse

Code	Pack	Carton
553.00.02	1	1

Spare battery
Batterie de rechange
Запасной аккумулятор
Baterie de rezervă
Batería de recambio
Auswechselbatterie

Code	Pack	Carton
1495.00.02	1	1

055

681



Series TH clamps for press fittings.

Suitable for RBM press code 553.00.X2

Series TH clamps for press fittings
Pinces série TH pour raccords à sertir
Клещи серии TH для пресс-фитингов
Cleme seria TH pentru racorduri cu presare
Mordaza estándar serie TH para racores Press Fitting
Zangen Baureihe TH für zu pressende Verbindungsteile

Code	Size	Pack	Carton
681.14.02	Ø 14	1	1
681.16.02	Ø 16	1	1
681.18.02	Ø 18	1	1
681.20.02	Ø 20	1	1
681.26.02	Ø 26	1	1
681.32.02	Ø 32	1	1
681.40.02	Ø 40	1	1
681.50.02	Ø 50	1	1
681.63.02	Ø 63	1	1

Size: Pipe outside Ø.

055

1338



Wireless press for press fitting.

Rechargeable battery power supply.
Supplied complete with battery charger kit and shockproof containment and carrying case.

- Battery 18V 2Ah
- Weight in use 2.5Kg
- Dimensions 336x143x76 mm

CE

Compact

Portable wireless press
Sertisseuse sans fil portative
Переносной беспроводной пресс
Dispozitiv presor fără fire portabil
Prensa hidráulica a batería para racores Press Fitting
Tragbare drahtlose Rohrdruckpresse

Code	Pack	Carton
1338.00.02	1	1

Spare battery
Batterie de rechange
Запасной аккумулятор
Baterie de rezervă
Batería de recambio
Auswechselbatterie

Code	Pack	Carton
1496.00.02	1	1

055

1339



Clamp and interchangeable inserts for press fittings.

Suitable for RBM press code 1338.00.02

Clamp and interchangeable inserts
Pince et inserts interchangeables
Клещи и вставки заменяемые
Clemă și plăcuțe distanțiere interschimbabile
Mordaza y casquillos intercambiables para prensa hidráulica compacta
Zange und auswechselbare Einsätze

Code	Size	Pack	Carton
1339.00.02	clamp	1	1
1340.14.02	Ø 14	1	1
1340.16.02	Ø 16	1	1
1340.18.02	Ø 18	1	1
1340.20.02	Ø 20	1	1
1340.26.02	Ø 26	1	1
1340.32.02	Ø 32	1	1

Size: Pipe outside Ø.

055


RBM
Sferika

BALL VALVES AND CHECK VALVES

VANNES À BILLE ET CLAPETS DE RETENUE

ШАРОВЫЕ И ОБРАТНЫЕ КЛАПАНЫ

ROBINETE CU BILĂ ȘI SUPAPE DE REȚINERE

VÁLVULAS DE BOLA Y VÁLVULAS DE RETENCIÓN

KUGELVENTILE UND RÜCKSCHLAGVENTILE

1. BALL VALVES AND CHECK VALVES PAG. 345


RBM
Sferika

BALL VALVES AND CHECK VALVES

VANNES À BILLE ET CLAPETS DE RETENUE

ШАРОВЫЕ И ОБРАТНЫЕ КЛАПАНЫ

ROBINETE CU BILĂ ȘI SUPAPE DE REȚINERE

ROBINETE CU BILĂ ȘI SUPAPE DE REȚINERE

KUGELVENTILE UND RÜCKSCHLAGVENTILE

Water ball valves: GS RBM ARNO heavy full bore range	pag. 346	
Water ball valves: RBM NILO full bore range	pag. 349	
Water ball valves: RBM IRO standard bore range	pag. 353	
Check valves	pag. 360	
Accessories	pag. 361	

3371



Heavy full bore ball valve, lever handle operated, FF connections. Suitable for water, water+ glycol, steam, hydrocarbons.

Nickel brass body.
Thick chrome plated brass ball.
PTFE seal.
Threaded connections UNI-EN-ISO 228.

- Operating temperature with water -20 - + 120 °C

PED

047

Heavy full bore ball valve, lever handle operated, FF connections
Vanne à bille passage intégral série lourde, actionnement par poignée à levier en aluminium, raccords FF
Усиленный полнопроходной шаровый кран с ручкой-рычагом, вн.- вн. резьба
Supapă cu bilă cu trecere totală debit masiv, cu acționare cu manetă tip levier, prinderi Mamă/Mamă
Válvula de esfera hembra-hembra con palanca en aluminio, paso total, pesante
Kugelventil schwerer Volldurchfluss, Betätigung mit Hebelgriff, Anschlüsse FF

Code	Size	PN	Pack	Carton
3371 14NI	1/4"	40	10	160
3371 38NI	3/8"	40	10	160
3371 12NI	1/2"	40	8	64
3371 34NI	3/4"	40	6	48
3371 10NI	1"	40	6	48
3371 04NI	1"1/4*	40	4	32
3371 02NI	1"1/2*	40	2	16
3371 20NI	2"*	40	2	10
3371 22N	2"1/2*	25	8	8
3371 30N	3"*	25	6	6
3371 40N	4"*	10	4	4

3372



Heavy full bore ball valve, butterfly handle operated, FF connections. Suitable for water, water+ glycol, steam, hydrocarbons.

Nickel brass body.
Thick chrome plated brass ball.
PTFE seal.
Threaded connections UNI-EN-ISO 228.

- Operating temperature with water -20 - + 120 °C

PED

047

Heavy full bore ball valve, butterfly handle operated, FF connections
Vanne à bille passage intégral série lourde, actionnement par poignée papillon, raccords FF
Усиленный полнопроходной шаровый кран с ручкой-бабочкой, вн.- вн. резьба
Supapă cu bilă cu trecere totală debit masiv, cu acționare cu manetă tip fluture, prinderi Mamă/Mamă
Válvula de esfera hembra-hembra con palomilla en aluminio, paso total, pesante
Kugelventil schwerer Volldurchfluss, Betätigung mit Flügelgriff, Anschlüsse FF

Code	Size	PN	Pack	Carton
3372 14NI	1/4"	40	10	160
3372 38NI	3/8"	40	10	160
3372 12NI	1/2"	40	10	120
3372 34NI	3/4"	40	5	80
3372 10NI	1"	40	5	60
3372 04NI	1"1/4*	40	4	32

3373



Heavy full bore ball valve, lever handle operated, MF connections. Suitable for water, water+ glycol, steam, hydrocarbons.

Nickel brass body.
Thick chrome plated brass ball.
PTFE seal.
Threaded connections UNI-EN-ISO-228.

- Operating temperature with water -20 - + 120 °C

PED

047

Heavy full bore ball valve, lever handle operated, MF connections
Vanne à bille passage intégral série lourde, actionnement par poignée à levier en aluminium, raccords MF
Усиленный полнопроходной шаровый кран с ручкой-рычагом, нар.- вн. резьба
Supapă cu bilă cu trecere totală debit masiv, cu acționare cu manetă tip levier, prinderi Tată/Mamă
Válvula de esfera macho-hembra con palanca en aluminio, paso total, pesante
Kugelventil schwerer Volldurchfluss, Betätigung mit Hebelgriff, Anschlüsse MF

Code	Size	PN	Pack	Carton
3373 14NI	1/4"	40	10	160
3373 38NI	3/8"	40	10	160
3373 12NI	1/2"	40	10	120
3373 34NI	3/4"	40	6	48
3373 10NI	1"	40	4	48
3373 04NI	1"1/4*	40	4	32
3373 02NI	1"1/2*	40	2	20
3373 20NI	2"*	40	2	10

3374



Heavy full bore ball valve, butterfly handle operated, MF connections. Suitable for water, water+ glycol, steam, hydrocarbons.

Nickel brass body.
Thick chrome plated brass ball.
PTFE seal.
Threaded connections UNI-EN-ISO 228.

- Operating temperature with water -20 - + 120 °C

Heavy full bore ball valve, butterfly handle operated, MF connections
Vanne à bille passage intégral série lourde, actionnement par poignée papillon, raccords MF
Усиленный полнопроходной шаровый кран с ручкой-бабочкой нар.- вн. резьба
Supapă cu bilă cu trecere totală debit masiv, cu acționare cu manetă tip fluture, prinderi Tată/Mamă
Válvula de esfera macho-hembra con palomilla en aluminio, paso total, pesante
Kugelventil schwerer Volldurchfluss, Betätigung mit Flügelgriff, Anschlüsse MF

Code	Size	PN	Pack	Carton
3374 14NI	1/4"	40	10	160
3374 38NI	3/8"	40	10	160
3374 12NI	1/2"	40	10	120
3374 34NI	3/4"	40	5	60
3374 10NI	1"	40	5	60

047

3386



Heavy full bore angled ball valve, butterfly handle operated, F connection with M union. Suitable for water, water+ glycol, steam, hydrocarbons.

Nickel brass body.
Thick chrome plated brass ball.
PTFE seal.
Threaded connections UNI-EN-ISO 228.

- Operating temperature with water -20 - + 120 °C

Heavy full bore angle ball valve, butterfly handle operated, F connection with M inlet coupling
Vanne à bille en équerre passage intégral série lourde, actionnement par poignée papillon, raccord F écrou libre M
Усиленный, полнопроходной, угловой шаровой кран с ручкой-бабочкой , вн. резьба - американка с наружной резьбой
Supapă cu bilă în echer cu trecere totală debit masiv, cu acționare cu manetă tip fluture, prindere tip Mamă, cu știuț tip Tată
Válvula de esfera escuadra macho-hembra con racor 3 piezas, con palomilla en aluminio, paso total, pesante
Quadratisches Kugelventil schwerer Volldurchfluss, Betätigung mit Flügelgriff, Anschluss F mit M-Stutzen

Code	Size A	Size B	PN	Pack	Carton
3386 09NI	1/2"	1/2"	40	10	120
3386 A1NI	3/4"	3/4"	40	5	60
3386 A2NI	1"	1"	40	4	40

047

3255



Curved ball bibcock, lever handle operated. Suitable for water, water+ glycol, steam, hydrocarbons.

Nickel brass body.
Thick chrome plated brass ball.
PTFE seal.
Elastomer OR gaskets.
Threaded connections UNI-EN-ISO 228.

- Operating temperature with water -20 - + 120 °C

Curved ball bibcock, with lever handle
Robinet de distribution coudé à bille, avec poignée à levier
Угловой шаровой кран подачи, с рычажной ручкой
Robinet de distribuție curbat cu sferă, cu manetă tip levier
Grifo de distribución curvado de bola, con manija de palanca
Gekrümmter Kugelhahn mit Hebelgriff

Code	Size	PN	Pack	Carton
3255 12NI	1/2"	30	10	80
3255 34NI	3/4"	30	5	50
3255 10NI	1"	30	4	20

047

3256



Curved ball bibcock, butterfly handle operated. Suitable for water, water+ glycol, steam, hydrocarbons.

Nickel brass body.
Thick chrome plated brass ball.
PTFE seal.
Elastomer OR gaskets.
Threaded connections UNI-EN-ISO 228.

- Operating temperature with water -20 - + 120 °C

Curved ball bibcock, with butterfly handle
Robinet de distribution coudé à bille, avec poignée papillon
Угловой шаровой кран подачи, с вентильной ручкой
Robinet de distribuție curbat cu sferă, cu manetă tip fluture
Grifo de distribución curvado de bola, con manija de mariposa
Gekrümmter Kugelhahn mit Flügelgriff

Code	Size	PN	Pack	Carton
3256 12NI	1/2"	30	10	80
3256 34NI	3/4"	30	5	50
3256 10NI	1"	30	4	20

047

2959



Full bore ball valve, lever handle operated, FF connections. Suitable for water, water+glycol.

Nickel brass body.
Thick chrome plated brass ball.
PTFE seal.
Elastomer OR gaskets.
ISO 7 (UNI EN 10226) threaded connections.

- Operating temperature with water -20 - +120 °C (without steam)

RBM Nilo®

ISO 7 (UNI EN 10226) threaded connections.

Full bore ball valve, lever handle operated, FF connections
Vanne à bille passage intégral, actionnement par poignée à levier en aluminium, raccords FF
Полнопроходной шаровый кран с ручкой-рычагом, вн.- вн. резьба
Supapă cu bilă cu trecere totală, cu acționare cu manetă tip levier, prinderi Mamă/Mamă
Válvula de esfera hembra-hembra con palanca en aluminio, paso total
Kugelventil Volldurchfluss, Betätigung mit Hebelgriff, Anschlüsse FF

Code	Size	PN	Pack	Carton
2959.03.90	3/8"	50	10	40
2959.04.90	1/2"	40	10	80
2959.05.90	3/4"	40	5	40
2959.06.90	1"	40	4	40
2959.07.90	1"1/4	30	4	24
2959.08.90	1"1/2	25	2	12
2959.09.90	2"	25	2	8
3371 22N	2"1/2 *	25	8	8
3371 30N	3" *	25	6	6
3371 40N	4" *	10	4	4

052

2959



Full bore ball valve, lever handle operated, FF connections. Suitable for water, water+glycol.

Nickel brass body.
Thick chrome plated brass ball.
PTFE seal.
Elastomer OR gaskets.
ISO 7 (UNI EN 10226) threaded connections.

- Operating temperature with water -20 - +120 °C (without steam)

RBM Nilo®

ISO 7 (UNI EN 10226) threaded connections.

Full bore ball valve, lever handle operated, FF connections
Vanne à bille passage intégral, actionnement par poignée à levier en aluminium, raccords FF
Полнопроходной шаровый кран с ручкой-рычагом, вн.- вн. резьба
Supapă cu bilă cu trecere totală, cu acționare cu manetă tip levier, prinderi Mamă/Mamă
Válvula de esfera hembra-hembra con palanca en aluminio, paso total
Kugelventil Volldurchfluss, Betätigung mit Hebelgriff, Anschlüsse FF

Code	Size	PN	Pack	Carton
2959.03.00	3/8"	50	10	40
2959.04.00	1/2"	40	10	80
2959.05.00	3/4"	40	5	50
2959.06.00	1"	40	4	40
2959.07.00	1"1/4	30	4	24
2959.08.00	1"1/2	25	2	12
2959.09.00	2"	25	2	8

052

2959



Full bore ball valve, butterfly handle operated, FF connections. Suitable for water, water+glycol.

Nickel brass body.
Thick chrome plated brass ball.
PTFE seal.
Elastomer OR gaskets.
ISO 7 (UNI EN 10226) threaded connections.

- Operating temperature with water -20 - +120 °C (without steam)

RBM Nilo®

ISO 7 (UNI EN 10226) threaded connections.

Full bore ball valve, butterfly handle operated, FF connections
Vanne à bille passage intégral, actionnement par poignée papillon, raccords FF
Полнопроходной шаровый кран с ручкой-бабочкой, вн.- вн. резьба
Supapă cu bilă cu trecere totală, cu acționare cu manetă tip fluture, prinderi Mamă/Mamă
Válvula de esfera hembra-hembra con palomilla en aluminio, paso total
Kugelventil Volldurchfluss, Betätigung mit Flügelgriff, Anschlüsse FF

Code	Size	PN	Pack	Carton
2959.03.70	3/8"	50	10	40
2959.04.70	1/2"	40	10	80
2959.05.70	3/4"	40	5	50
2959.06.70	1"	40	5	40
2959.07.70	1"1/4	30	4	24

052

2960



Full bore ball valve, lever handle operated, MF connections. Suitable for water, water+glycol.

Nickel brass body.
Thick chrome plated brass ball.
PTFE seal.
Elastomer OR gaskets.
ISO 7 (UNI EN 10226) threaded connections.

- Operating temperature with water -20 - +120 °C (without steam)

RBM Nilo®

ISO 7 (UNI EN 10226) threaded connections.

Full bore ball valve, lever handle operated, MF connections
Vanne à bille passage intégral, actionnement par poignée à levier en aluminium, raccords MF
Полнопроходной шаровый кран с ручкой-бабочкой, вн.- вн. резьба
Supapă cu bilă cu trecere totală, cu acționare cu manetă tip levier, prinderi Tată/Mamă
Válvula de esfera macho-hembra con palanca en aluminio, paso total
Kugelventil Volldurchfluss, Betätigung mit Hebelgriff, Anschlüsse MF

Code	Size	PN	Pack	Carton
2960.03.90	3/8"	50	10	160
2960.04.90	1/2"	40	10	80
2960.05.90	3/4"	40	5	50
2960.06.90	1"	40	4	40
2960.07.90	1"1/4	30	4	24
2960.08.90	1"1/2	25	2	12
2960.09.90	2"	25	2	8

052

2960



Full bore ball valve, lever handle operated, MF connections. Suitable for water, water+glycol.

Nickel brass body.
Thick chrome plated brass ball.
PTFE seal.
Elastomer OR gaskets.
ISO 7 (UNI EN 10226) threaded connections.

- Operating temperature with water -20 - +120 °C (without steam)

RBM Nilo®

ISO 7 (UNI EN 10226) threaded connections.

Full bore ball valve, lever handle operated, MF connections
Vanne à bille passage intégral, actionnement par poignée à levier en aluminium, raccords MF
Полнопроходной шаровый кран с ручкой-бабочкой, вн.- вн. резьба
Supapă cu bilă cu trecere totală, cu acționare cu manetă tip levier, prinderi Tată/Mamă
Válvula de esfera macho-hembra con palanca en aluminio, paso total
Kugelventil Volldurchfluss, Betätigung mit Hebelgriff, Anschlüsse MF

Code	Size	PN	Pack	Carton
2960.03.00	3/8"	50	10	40
2960.04.00	1/2"	40	10	80
2960.05.00	3/4"	40	5	50
2960.06.00	1"	40	4	40
2960.07.00	1"1/4	30	4	24
2960.08.00	1"1/2	25	2	12
2960.09.00	2"	25	2	8

052

2960



Full bore ball valve, butterfly handle operated, MF connections. Suitable for water, water+glycol.

Nickel brass body.
Thick chrome plated brass ball.
PTFE seal.
Elastomer OR gaskets.
ISO 7 (UNI EN 10226) threaded connections.

- Operating temperature with water -20 - +120 °C (without steam)

RBM Nilo®

ISO 7 (UNI EN 10226) threaded connections.

Full bore ball valve, butterfly handle operated, MF connections
Vanne à bille passage intégral, actionnement par poignée papillon, raccords MF
Полнопроходной шаровый кран с ручкой-бабочкой, нар.- вн. резьба
Supapă cu bilă cu trecere totală, cu acționare cu manetă de tip fluture, prinderi Tată/Mamă
Válvula de esfera macho-hembra con palomilla en aluminio, paso total
Kugelventil Volldurchfluss für Gas mit Flügelgriff, Anschlüsse MF

Code	Size	PN	Pack	Carton
2960.03.70	3/8"	50	10	40
2960.04.70	1/2"	40	10	80
2960.05.70	3/4"	40	5	50
2960.06.70	1"	40	5	40
2960.07.70	1"1/4	30	4	24

052

3346



Full bore ball valve, butterfly handle operated, F connection with M union. Suitable for water, water+ glycol.

Nickel brass body.
Thick chrome plated brass ball.
PTFE seal.
Elastomer OR gaskets.
ISO 7 (UNI EN 10226) threaded connections.

- Operating temperature with water -20 - +120 °C (without steam)

ACS

RBM Nilo®

ISO 7 (UNI EN 10226) threaded connections.

Full bore ball valve, butterfly handle operated, F connection with M inlet coupling
Vanne à bille passage intégral, actionnement par poignée papillon, raccord F écrou libre M
Усиленный полнопроходной шаровый кран с ручкой-бабочкой вн. резьба - американка с наружной резьбой
Supapă cu bilă cu trecere totală debit, cu acționare cu manetă tip fluture, prinderi Mamă, cu știuț tip Tată
Válvula de esfera macho-hembra con racor 3 piezas, con palomilla en aluminio, paso total
Kugelventil schwerer Volldurchfluss, Betätigung mit Flügelgriff, Anschluss F mit M-Stutzen

Code	Size A	Size B	PN	Pack	Carton
3346.04.70	1/2"	1/2"	40	15	90
3346.05.70	3/4"	3/4"	40	10	40
3346.06.70	1"	1"	40	5	30
3346.07.70	1"1/4	1"1/4	30	4	16

052

67



Full bore ball valve, knob operated complete with immersion thermometer with removable rear bulb, MF connections, with OR seal fitting. Suitable for water, water+glycol.

Nickel brass body.
Thick chrome plated brass ball.
PTFE seal.
Elastomer OR gaskets.
Threaded connections UNI-EN-ISO 228.

- Operating temperature with water -20 - +120 °C (without steam)
- Thermometer scale 0 ÷ +80 °C

ACS

RBM Nilo®

Full bore ball valve, knob operated complete with thermometer, MF connections, with OR seal fitting
Vanne à bille passage intégral, actionnement par poignée avec thermomètre, raccords MF, avec raccord à joint torique
Полнопроходной шаровый кран с термометром, нар.- вн. резьба, соединение с уплотнительным кольцом OR
Supapă cu bilă cu trecere totală, acționare prin buton prevăzută cu termometru, prinderi Tată/Mamă, cu racord cu garnitură OR
Válvula de esfera macho-hembra con racor 3 piezas con autojunta, volante azul con termómetro, pasto total
Kugelventil Volldurchfluss, Betätigung mit Drehknopf komplett mit Thermometer, Anschlüsse MF mit OR-Dichtungsanschluss

Code	Size	PN	Pack	Carton
67.06.90	1"	25	2	10

Fitting with OR seal connection.

052

67



Full bore ball valve, knob operated complete with immersion thermometer with removable rear bulb, MF connections, with OR seal fitting. Suitable for water, water+glycol.

Nickel brass body.
Thick chrome plated brass ball.
PTFE seal.
Elastomer OR gaskets.
Threaded connections UNI-EN-ISO 228.

- Operating temperature with water -20 - +120 °C (without steam)
- Thermometer scale 0 ÷ +80 °C

ACS

RBM Nilo®

Full bore ball valve, knob operated complete with thermometer, MF connections, with OR seal fitting
Vanne à bille passage intégral, actionnement par poignée avec thermomètre, raccords MF, avec raccord à joint torique
Полнопроходной шаровый кран с термометром, нар.- вн. резьба, соединение с уплотнительным кольцом OR
Supapă cu bilă cu trecere totală, acționare prin buton prevăzută cu termometru, prinderi Tată/Mamă, cu racord cu garnitură OR
Válvula de esfera macho-hembra con racor 3 piezas con autojunta, volante azul con termómetro, pasto total
Kugelventil Volldurchfluss, Betätigung mit Drehknopf komplett mit Thermometer, Anschlüsse MF mit OR-Dichtungsanschluss

Code	Size	PN	Pack	Carton
67.06.80	1"	25	2	10

Fitting with OR seal connection.

052

2860



Ball bib-cock, with lever handle.
Suitable for water, water+glycol.

Nickel brass body.
Thick chrome plated brass ball.
PTFE seal.
Elastomer OR gaskets.
Threaded connections UNI-EN-ISO 228.

- Operating temperature with water -0 - +80 °C

RBM Nilo®

052

Ball bib-cock, with lever handle
Robinet de distribution coudé à bille, avec poignée à levier
Шаровый кран с изогнутым сливом с ручкой-рычагом
Robinet de distribuție curbat cu bilă, cu manetă de tip levier
Grifo de jardín con palanca en aluminio, con toma para manguera
Gekrümmter Kugelhahn mit Hebelgriff

Code	Size	PN	Pack	Carton
2860.04.02	1/2"	10	8	64
2860.05.02	3/4"	10	6	48

2860



Ball bib-cock, with butterfly handle.
Suitable for water, water+glycol.

Nickel brass body.
Thick chrome plated brass ball.
PTFE seal.
Elastomer OR gaskets.
Threaded connections UNI-EN-ISO 228.

- Operating temperature with water -0 - +80 °C

RBM Nilo®

052

Ball bib-cock, with butterfly handle
Robinet de distribution coudé à bille, avec poignée papillon
Шаровый кран с изогнутым сливом с ручкой-бабочкой
Robinet de distribuție curbat cu bilă, cu manetă de tip fluture
Grifo de jardín con palomilla en aluminio, con toma para manguera
Gekrümmter Kugelhahn mit Flügelgriff

Code	Size	PN	Pack	Carton
2860.04.12	1/2"	10	10	80
2860.05.12	3/4"	10	8	64

3176



Square ball valve, butterfly handle operated, F connection with M union.
Suitable for water, water+glycol.

Nickel brass body.
Thick chrome plated brass ball.
PTFE seal.
Elastomer OR gaskets.
Threaded connections UNI-EN-ISO 228.

- Operating temperature with water -20 - +120 °C (without steam)

RBM Nilo®

052

Angle ball valve, butterfly handle operated, F connection with M inlet coupling
Vanne à bille en équerre, actionnement par poignée papillon, raccord F écrou libre M
Шаровой клапан под прямым углом, с дроссельным приводом, крепление с внутренней резьбой со штуцером с внешней резьбой
Robinet cu bilă unghiular, acționare cu manetă fluture, prindere Mamă cu racord Tată
Válvula de esfera escuadra macho-hembra con racor 3 piezas, con palomilla en aluminio
Quadratisches Kugelventil, Betätigung mit Flügelgriff, Anschluss F mit M-Stutzen

Code	Size	PN	Pack	Carton
3176.05.00	3/4"	25	5	40
3176.06.00	1"	25	4	32

3171



Three-way ball valve, T-shaped manoeuvre operated, with lever handle, FFF connections.
Suitable for water, water+ glycol.

Nickel brass body.
Thick chrome plated brass ball.
PTFE seal.
Elastomer OR gaskets.
Threaded connections UNI-EN-ISO 228.

- Operating temperature with water -20 - +120 °C (without steam)

RBM Nilo®

052

Three-way ball valve, T-shaped manoeuvre operated, with lever handle, FFF connections
Vanne à bille à trois voies, actionnement par manœuvre en T, avec poignée à levier en acier, raccords FFF
Трехходовой шаровый кран Т-образный с ручкой-рычагом, вн.- вн. резьба
Supapă cu bilă cu trei canale, acționare cu manevră în T, cu manetă tip levier, prinderi Mamă/Mamă/Mamă
Válvula de esfera 3 vías H-H-H, accionamiento a T, con palanca en aluminio, paso total, pesante
Drei-Wege-Kugelventil, Betätigung mit T-Bewegung, mit Hebelgriff, Anschlüsse FFF

Code	Size	PN	Pack	Carton
3171.04.00	1/2"	25	1	6
3171.05.00	3/4"	25	1	6
3171.06.00	1"	25	1	6

3172



Three-way ball valve, L-shaped manoeuvre operated, with lever handle, FFF connections.
Suitable for water, water+ glycol.

Nickel brass body.
Thick chrome plated brass ball.
PTFE seal.
Elastomer OR gaskets.
Threaded connections UNI-EN-ISO 228.

- Operating temperature with water -20 - +120 °C (without steam)

RBM Nilo®

052

Three-way ball valve, L-shaped manoeuvre operated, with lever handle, FFF connections
Vanne à bille à trois voies, actionnement par manœuvre en L, avec poignée à levier en acier, raccords FFF
Трехходовой шаровый кран L-образной с ручкой-рычагом, вн.- вн.- вн. резьба
Supapă cu bilă cu trei canale, acționare cu manevră în L, cu manetă tip levier, prinderi Mamă/Mamă/Mamă
Válvula de esfera 3 vías H-H-H, accionamiento a L, con palanca en aluminio, paso total, pesante
Drei-Wege-Kugelventil, Betätigung mit L-Bewegung, mit Hebelgriff, Anschlüsse FFF

Code	Size	PN	Pack	Carton
3172.04.00	1/2"	25	1	6
3172.05.00	3/4"	25	1	6
3172.06.00	1"	25	1	6

854



Standard bore ball valve, lever handle operated, FF connections. Suitable for water, water+glycol.

Nickel brass body.
Thick chrome plated brass ball.
PTFE seal.
Elastomer OR gaskets.
Threaded connections UNI-EN-ISO 228.

- Operating temperature with water -20 - +120 °C (without steam)

Standard bore ball valve, lever handle operated, FF connections
Vanne à bille passage standard, actionnement par poignée à levier, raccords FF
Шаровый кран стандартно-проходной с ручкой-рычагом, вн.- вн. резьба
Supapă cu bilă cu trecere standard, cu acționare cu manetă tip levier, prinderi Mamă/Mamă
Válvula de esfera hembra-hembra con palanca en aluminio, paso estándar
Kugelventil Standarddurchfluss, Betätigung mit Hebelgriff, Anschlüsse FF

Code	Size	PN	Pack	Carton
855.03.32*	3/8"	50	20	80
854.04.32	1/2"	50	15	90
854.05.32	3/4"	50	12	48
854.06.32	1"	40	6	36
854.07.32	1"1/4	30	6	24
854.08.32	1"1/2	25	2	12
854.09.32	2"	25	2	8
3371 22N	2"1/2*	25	8	8
3371 30N	3"*	25	6	6
3371 40N	4"*	10	4	4

*Full bore

053

854



Standard bore ball valve, lever handle operated, FF connections. Suitable for water, water+glycol.

Nickel brass body.
Thick chrome plated brass ball.
PTFE seal.
Elastomer OR gaskets.
Threaded connections UNI-EN-ISO 228.

- Operating temperature with water -20 - +120 °C (without steam)

Standard bore ball valve, lever handle operated, FF connections
Vanne à bille passage standard, actionnement par poignée à levier, raccords FF
Шаровый кран стандартно-проходной с ручкой-рычагом, вн.- вн. резьба
Supapă cu bilă cu trecere standard, cu acționare cu manetă tip levier, prinderi Mamă/Mamă
Válvula de esfera hembra-hembra con palanca en aluminio, paso estándar
Kugelventil Standarddurchfluss, Betätigung mit Hebelgriff, Anschlüsse FF

Code	Size	PN	Pack	Carton
855.03.42*	3/8"	50	20	80
854.04.42	1/2"	50	15	90
854.05.42	3/4"	50	12	48
854.06.42	1"	40	6	36
854.07.42	1"1/4	30	6	24
854.08.42	1"1/2	25	2	12
854.09.42	2"	25	2	8

*Full bore

053

989



Standard bore ball valve, butterfly handle operated, FF connections. Suitable for water, water+glycol.

Nickel brass body.
Thick chrome plated brass ball.
PTFE seal.
Elastomer OR gaskets.
Threaded connections UNI-EN-ISO 228.

- Operating temperature with water -20 - +120 °C (without steam)

Standard bore ball valve, butterfly handle operated, FF connections
Vanne à bille à passage standard, actionnement avec poignée papillon, raccords FF
Шаровой кран со стандартным проходом, управление вентильной ручкой, крепления ВНУТР.-ВНУТР. резьба
Robinet cu bilă cu trecere standard, cu acționare cu manetă tip fluture, prinderi Mamă/Mamă
Válvula de bola de paso estándar, accionamiento con manija de mariposa, conexiones HH
Kugelventil mit Standarddurchfluss Betätigung mit Flügelgriff, Anschlüsse IG/IG

Code	Size	PN	Pack	Carton
989.03.32*	3/8"	50	20	80
989.04.32	1/2"	50	15	90
989.05.32	3/4"	50	12	48
989.06.32	1"	40	6	36
989.07.32	1"1/4	30	8	24

*Full bore

053

885



Standard bore ball valve, lever handle operated, MM connections. Suitable for water, water+glycol.

Nickel brass body.
Thick chrome plated brass ball.
PTFE seal.
Elastomer OR gaskets.
Threaded connections UNI-EN-ISO 228.

- Operating temperature with water -20 - +120 °C (without steam)

Standard bore ball valve, lever handle operated, MM connections
Vanne à bille passage standard, actionnement par poignée à levier, raccords MM
Шаровый кран стандартно-проходной с ручкой-рычагом, нар.- нар. резьба
Supapă cu bilă cu trecere standard, cu acționare cu manetă tip levier, prinderi Tată/Tată
Válvula de esfera macho-macho con palanca en aluminio, paso estándar
Kugelventil Volldurchfluss für Gas mit Hebelgriff, Anschlüsse MM

Code	Size	PN	Pack	Carton
885.03.52*	3/8"	50	20	80
885.04.52	1/2"	50	15	60
885.05.52	3/4"	50	12	48
885.06.52	1"	40	6	36

*Full bore

053

885



Standard bore ball valve, lever handle operated, MM connections. Suitable for water, water+glycol.

Nickel brass body.
Thick chrome plated brass ball.
PTFE seal.
Elastomer OR gaskets.
Threaded connections UNI-EN-ISO 228.

- Operating temperature with water -20 - +120 °C (without steam)

Standard bore ball valve, lever handle operated, MM connections
Vanne à bille passage standard, actionnement par poignée à levier, raccords MM
Шаровый кран стандартно-проходной с ручкой-рычагом, нар.- нар. резьба
Supapă cu bilă cu trecere standard, cu acționare cu manetă tip levier, prinderi Tată/Tată
Válvula de esfera macho-macho con palanca en aluminio, paso estándar
Kugelventil Volldurchfluss für Gas mit Hebelgriff, Anschlüsse MM

Code	Size	PN	Pack	Carton
885.03.32*	3/8"	50	20	80
885.04.32	1/2"	50	15	60
885.05.32	3/4"	50	12	48
885.06.32	1"	40	6	36

*Full bore

053

885



Standard bore ball valve, butterfly handle operated, MM connections. Suitable for water, water+glycol.

Nickel brass body.
Thick chrome plated brass ball.
PTFE seal.
Elastomer OR gaskets.
Threaded connections UNI-EN-ISO 228.

- Operating temperature with water -20 - +120 °C (without steam)

Standard bore ball valve, butterfly handle operated, MM connections
Vanne à bille passage standard, actionnement par poignée papillon, raccords MM
Шаровый кран стандартно-проходной с ручкой-бабочкой, нар.- нар. резьба
Supapă cu bilă cu trecere standard, cu acționare cu manetă tip fluture, prinderi Tată/Tată
Válvula de esfera macho-macho con palomilla en aluminio, paso estándar
Kugelventil Standarddurchfluss, Betätigung mit Flügelgriff, Anschlüsse MM

Code	Size	PN	Pack	Carton
885.03.42*	3/8"	50	20	80
885.04.42	1/2"	50	15	60
885.05.42	3/4"	50	12	48
885.06.42	1"	40	6	36

*Full bore

053

886



Standard bore ball valve, lever handle operated, MF connections. Suitable for water, water+glycol.

Nickel brass body.
Thick chrome plated brass ball.
PTFE seal.
Elastomer OR gaskets.
Threaded connections UNI-EN-ISO 228.

- Operating temperature with water -20 - +120 °C (without steam)

ACS

RBM Iro®

053

Standard bore ball valve, lever handle operated, MF connections
Vanne à bille passage standard, actionnement par poignée à levier, raccords MF
Шаровый кран стандартно-проходной с ручкой-рычагом, нар.- вн. резьба
Supapă cu bilă cu trecere standard, cu acționare cu manetă tip levier, prinderi Tată/Mamă
Válvula de esfera macho-hembra con palanca en aluminio, paso estándar
Kugelventil Standarddurchfluss, Betätigung mit Hebelgriff, Anschlüsse MF

Code	Size	PN	Pack	Carton
886.03.32*	3/8"	50	20	40
886.04.32	1/2"	50	15	90
886.05.32	3/4"	50	12	48
886.06.32	1"	40	6	36
886.07.32	1"1/4	30	5	20
886.08.32	1"1/2	25	2	12
886.09.32	2"	25	2	8

*Full bore

886



Standard bore ball valve, lever handle operated, MF connections. Suitable for water, water+glycol.

Nickel brass body.
Thick chrome plated brass ball.
PTFE seal.
Elastomer OR gaskets.
Threaded connections UNI-EN-ISO 228.

- Operating temperature with water -20 - +120 °C (without steam)

ACS

RBM Iro®

053

Standard bore ball valve, lever handle operated, MF connections
Vanne à bille passage standard, actionnement par poignée à levier, raccords MF
Шаровый кран стандартно-проходной с ручкой-рычагом, нар.- вн. резьба
Supapă cu bilă cu trecere standard, cu acționare cu manetă tip levier, prinderi Tată/Mamă
Válvula de esfera macho-hembra con palanca en aluminio, paso estándar
Kugelventil Standarddurchfluss, Betätigung mit Hebelgriff, Anschlüsse MF

Code	Size	PN	Pack	Carton
886.03.42*	3/8"	50	20	80
886.04.42	1/2"	50	15	90
886.05.42	3/4"	50	12	48
886.06.42	1"	40	6	36
886.07.42	1"1/4	30	5	20
886.08.42	1"1/2	25	2	12
886.09.42	2"	25	2	8

*Full bore

887



Standard bore ball valve, butterfly handle operated, MF connections. Suitable for water, water+glycol.

Nickel brass body.
Thick chrome plated brass ball.
PTFE seal.
Elastomer OR gaskets.
Threaded connections UNI-EN-ISO 228.

- Operating temperature with water -20 - +120 °C (without steam)

ACS

RBM Iro®

053

Standard bore ball valve, butterfly handle operated, MF connections
Vanne à bille passage standard, actionnement par poignée papillon, raccords MF
Шаровый кран стандартно-проходной с ручкой-бабочкой, нар.- вн. резьба
Supapă cu bilă cu trecere standard, cu acționare cu manetă tip fluture, prinderi Tată/Mamă
Válvula de esfera macho-hembra con palomilla en aluminio, paso estándar
Kugelventil Standarddurchfluss, Betätigung mit Flügelgriff, Anschlüsse MF

Code	Size	PN	Pack	Carton
887.03.32*	3/8"	50	20	80
887.04.32	1/2"	50	15	90
887.05.32	3/4"	50	12	48
887.06.32	1"	40	6	36
887.07.32	1"1/4	30	6	18

*Full bore

67



Standard bore ball valve, butterfly handle operated, F connection with M union coupling. Suitable for water, water+glycol.

Nickel brass body.
Thick chrome plated brass ball.
PTFE seal.
Elastomer OR gaskets.
Threaded connections UNI-EN-ISO 228.

- Operating temperature with water -20 - +120 °C (without steam)

Standard bore ball valve, butterfly handle operated, F connection with M inlet coupling
Vanne à bille passage standard, actionnement par poignée papillon, raccord F écrou libre M
Шаровый кран стандартно-проходной с ручкой-бабочкой, нар.- вн. резьба
Supapă cu bilă cu trecere standard, cu acționare cu manetă tip fluture, prinderi Mamă, cu știuț tip Tată
Válvula de esfera macho-hembra con racor 3 piezas, palomilla azul en aluminio, paso estándar
Kugelventil Standarddurchfluss, Betätigung mit Flügelgriff, Anschluss F mit M-Stutzen

Code	Size A	Size B	PN	Pack	Carton
67.04.02	1/2"	1/2"	25	20	80
67.05.02	3/4"	3/4"	25	12	48
67.06.02	1"	1"	25	6	24
67.07.02	1"1/4	1"1/4	25	4	16

053

67



Standard bore ball valve, butterfly handle operated, F connection with M union coupling. Suitable for water, water+glycol.

Nickel brass body.
Thick chrome plated brass ball.
PTFE seal.
Elastomer OR gaskets.
Threaded connections UNI-EN-ISO 228.

- Operating temperature with water -20 - +120 °C (without steam)

Standard bore ball valve, butterfly handle operated, F connection with M inlet coupling
Vanne à bille passage standard, actionnement par poignée papillon, raccord F écrou libre M
Шаровый кран стандартно-проходной с ручкой-бабочкой, нар.- вн. резьба
Supapă cu bilă cu trecere standard, cu acționare cu manetă tip fluture, prinderi Mamă, cu știuț tip Tată
Válvula de esfera macho-hembra con racor 3 piezas, palomilla azul en aluminio, paso estándar
Kugelventil Standarddurchfluss, Betätigung mit Flügelgriff, Anschluss F mit M-Stutzen

Code	Size A	Size B	PN	Pack	Carton
67.04.12	1/2"	1/2"	25	20	80
67.05.12	3/4"	3/4"	25	12	48
67.06.12	1"	1"	25	6	24
67.07.12	1"1/4	1"1/4	25	4	16

053

2544



Standard bore ball valve, with built-in check valve, butterfly handle operated, 1"1/2 pump connection. Suitable for water, water+glycol.

Nickel brass body.
Thick chrome plated brass ball.
PTFE seal.
VITON OR gaskets.
Threaded connections UNI-EN-ISO 228.

- Operating temperature with water -20 - +120 °C (without steam)

Standard bore ball valve, with built-in check valve, butterfly handle operated, 1"1/2 pump connection
Vanne à bille à passage standard, avec anti-retour incorporé, actionnement avec poignée papillon, raccord pompe 1"1/2
Шаровой кран со стандартным проходом, с встроенным обратным клапаном, управление вентильной ручкой, крепление для насоса 1"1/2
Robinet cu bilă cu trecere standard, cu supapă de reținere încorporată, acționare cu manetă tip fluture, racord pompă 1"1/2
Válvula de bola de paso estándar, con retención incorporada, accionamiento con manija de mariposa, conexión para bomba 1"1/2
Kugelventil mit Standarddurchfluss, mit eingebautem Rückschlagventil, Betätigung mit Flügelgriff, Pumpenanschluss 1"1/2

Code	Size A	Size B	PN	Pack	Carton
2544.05.00	3/4"	1"1/2	50	8	24

Ball valve + built-in check valve.

053

2544



Standard bore ball valve, butterfly handle operated, 1"1/2 pump connection. Suitable for water, water+glycol.

Nickel brass body.
Thick chrome plated brass ball.
PTFE seal.
VITON OR gaskets.
Threaded connections UNI-EN-ISO 228.

- Operating temperature with water -20 - +120 °C (without steam)

ACS

RBM Iro®

053

Standard bore ball valve, butterfly handle operated, 1"1/2 pump connection
Vanne à bille à passage standard, actionnement avec poignée papillon, raccord pompe 1"1/2
Шаровой кран со стандартным проходом, управление вентильной ручкой, крепление для насоса 1"1/2
Robinet cu bilă cu trecere standard, cu acționare cu manetă tip fluture, racord pompă 1"1/2
Válvula de bola de paso estándar, accionamiento con manija de mariposa, conexión para bomba 1"1/2
Kugelventil mit Standarddurchfluss, Betätigung mit Flügelgriff, Pumpenanschluss 1"1/2

Code	Size A	Size B	PN	Pack	Carton
2544.05.10	3/4"	1"1/2	50	8	24

2544



Standard bore ball valve, with built-in check valve, butterfly handle operated, copper pipe compression connection and 1"1/2 pump connection. Suitable for water, water+glycol.

Nickel brass body.
Thick chrome plated brass ball.
PTFE seal.
VITON OR gaskets.
Threaded connections UNI-EN-ISO 228.
Copper pipe end connections.

- Operating temperature with water -20 - +120 °C (without steam)

ACS

RBM Iro®

Ball valve + built-in check valve.

053

Standard bore ball valve, with built-in check valve, butterfly handle operated, copper pipe compression connection and 1"1/2 pump connection
Vanne à bille à passage standard, avec anti-retour incorporé, actionnement avec poignée papillon, raccord à compression tube en cuivre et raccord pompe 1"1/2
Шаровой кран со стандартным проходом, со встроенным обратным клапаном, управление ручкой «бабочка», крепление с уплотнением для медной трубы и крепление для насоса 1"1/2
Robinet cu bilă cu trecere standard, cu supapă de reținere încorporată, acționare cu manetă tip fluture, racord cu compresie a tubului din cupru și racord pompă 1"1/2
Válvula de bola de paso estándar, con retención incorporada, accionamiento con manija de mariposa, conexión de compresión para tubo de cobre y conexión para bomba 1"1/2
Kugelventil mit Standarddurchfluss, mit eingebautem Rückschlagventil, Betätigung mit Flügelgriff, Klemmanschluss für Kupferrohr und Pumpenanschluss 1"1/2

Code	Size A	Size B	PN	Pack	Carton
2544.22.00	22	1"1/2	50	8	24

2544



Standard bore ball valve, butterfly handle operated, copper pipe compression connection and 1"1/2 pump connection. Suitable for water, water+glycol.

Nickel brass body.
Thick chrome plated brass ball.
PTFE seal.
VITON OR gaskets.
Threaded connections UNI-EN-ISO 228.
Copper pipe end connections.

- Operating temperature with water -20 - +120 °C (without steam)

ACS

RBM Iro®

053

Standard bore ball valve, butterfly handle operated, copper pipe compression connection and 1"1/2 pump connection
Vanne à bille à passage standard, actionnement avec poignée papillon, raccord à compression tube en cuivre et raccord pompe 1"1/2
Шаровой кран со стандартным проходом, управление ручкой «бабочка», крепление с уплотнением для медной трубы и крепление для насоса 1"1/2
Robinet cu bilă cu trecere standard, acționare cu manetă tip fluture, racord cu compresie a tubului din cupru și racord pompă 1"1/2
Válvula de bola de paso estándar, accionamiento con manija de mariposa, conexión de compresión para tubo de cobre y conexión para bomba 1"1/2
Kugelventil mit Standarddurchfluss, Betätigung mit Flügelgriff, Klemmanschluss für Kupferrohr und Pumpenanschluss 1"1/2

Code	Size A	Size B	PN	Pack	Carton
2544.22.10	22	1"1/2	50	8	24

2093



Standard bore ball valve, lever handle operated, copper pipe end connections. Suitable for water, water+glycol.

Nickel brass body.
Thick chrome plated brass ball.
PTFE seal.
Elastomer OR gaskets.
Copper pipe end connections.

- Operating temperature with water -20 - +120 °C (without steam)

Standard bore ball valve, lever handle operated, copper pipe end connections
Vanne a bille a passage standard, réglage avec poignée levier, raccord a compression pour tube cuivre
Шаровый кран стандартно-проходной с ручкой-рычагом, обжимное соединение для медных труб
Robinet cu bila pasaj standard, actionare cu maneta,racorzi pentru teava de cupru
Válvula de esfera con adaptadores para tubo de cobre y con palanca en aluminio, paso standar
Kugelhahn, standard Durchfluss, mit Handgriff, Pressfitting fur Kupferrohr

Code	Size	PN	Pack	Carton
2093.15.20	15	50	15	60
2093.22.20	22	50	10	40
2093.28.20	28	40	6	24
2093.35.20	35	30	4	40
2093.42.20	42	25	2	10
2093.54.20	54	25	1	4

The measurement is expressed in mm

053

2093



Standard bore ball valve, butterfly handle operated, copper pipe end connections. Suitable for water, water+glycol.

Nickel brass body.
Thick chrome plated brass ball.
PTFE seal.
Elastomer OR gaskets.
Copper pipe end connections.

- Operating temperature with water -20 - +120 °C (without steam)

Standard bore ball valve, butterfly handle operated, copper pipe end connections
Vanne a bille a passage standard, réglage avec poignée papillon, raccord à compression pour tube en cuivre
Шаровый кран стандартно-проходной с ручкой-бабочкой, обжимное соединение для медных труб
Robinet cu bila pasaj standard,actionare cu maneta fluture, racorzi pentru teava de cupru
Válvula de esfera con adaptadores para tubo de cobre y con palomilla en aluminio, paso standar
Kugelhahn, standard Durchfluss, mit Flügelgriff, Pressfitting fur Kupferrohr

Code	Size	PN	Pack	Carton
2093.15.00	15	50	20	80
2093.22.00	22	50	12	80
2093.28.00	28	40	6	24
2093.35.00	35	30	4	16

The measurement is expressed in mm

053

3465



Standard bore ball valve, lever handle operated, FF connections. Suitable for water, water+glycol.

Nickel brass body.
Thick chrome plated brass ball.
PTFE seal.
Elastomer OR gaskets.
Threaded connections UNI-EN-ISO 228.

- Operating temperature with water 0 - +80 °C

Ball valve with standard flow, with water drain valve, lever handle operated, FF connections
Vanne à bille à passage standard, avec vanne de vidange de l'eau, actionnement par poignée à levier en acier, raccords FF
Шаровой клапан стандартного шага со сливным клапаном воды, управление с дроссельным регулятором, крепления с ВНУТР.-ВНУТР. резьбой
Supapă cu bilă cu trecere standard, cu supapă de evacuare a apei, cu acționare cu manetă tip levier, prinderi Mamă/Mamă
Válvula de esfera de paso estándar, con válvula de descarga de agua, accionamiento con palanca en aluminio, conexiones FF
Kugelventil mit Standarddurchfluss, mit Wasserablassventil, Betätigung mit Hebelgriff, Anschlüsse FF

Code	Size	PN	Pack	Carton
3465.04.00	1/2"	50	1	60
3465.05.00	3/4"	50	1	50
3465.06.00	1"	40	1	30

053

3085



Check valve, FF connections. Suitable for water.

Brass body.
Elastomer gaskets.
Threaded connections FF UNI-EN-ISO 228.

- Operating temperature with water 0 - +80 °C

GS Everest®

Check valve, FF connections, plastic rod
Clapet anti-retour, raccords FF tige en plastique
Обратный клапан, крепления ВНУТР.-ВНУТР. резьба, пластмассовый стержень
Supapă de reținere, prinderi Mamă/Mamă tijă din plastic
Válvula de retención, conexiones HH barra de plástico
Rückschlagventil, Anschlüsse IG/IG, Schaft aus Kunststoff

Code	Size	PN	Pack	Carton
3085 38I	3/8"	16	10	120
3085 12I	1/2"	16	10	120
3085 34I	3/4"	16	10	120
3085 10I	1"	16	5	50
3085 04I	1"1/4	16	4	40
3085 02I	1"1/2	16	4	32
3085 20I	2"	16	2	20
3082.22.00	2"1/2	6	2	16
3082.30.00	3"	6	2	12
3082.40.00	4"	6	1	1

050

860



Check valve, FF connections. Suitable for water.

Brass body.
Elastomer gaskets.
Stainless steel AISI 302 spring.
Threaded connections FF UNI-EN-ISO 228.

- Min. opening pressure 0.04 Bar
- Max operating temperature 90 °C (Water)
- Max operating temperature 110 °C (Air)

ACS

RBM K2®

Check valve, FF connections, brass rod
Clapet anti-retour, raccords FF, tige en laiton
Обратный клапан с латунным штоком, вн.- вн. резьба
Supapă de reținere, prinderi Mamă/Mamă, tija din alamă
Válvula antiretorno a disco, hembra-hembra con eje en latón
Rückschlagventil, Anschlüsse FF, Schaft aus Messing

Code	Size	PN	Pack	Carton
860.04.02	1/2"	25	30	120
860.05.02	3/4"	25	16	64
860.06.02	1"	25	10	60
860.07.02	1"1/4	16	8	32
860.08.02	1"1/2	16	4	24
860.09.02	2"	16	2	12

Check valve, FF connections, plastic rod
Clapet anti-retour , raccords FF,tige en plastique
Обратный клапан с пластиковым штоком, вн.- вн. резьба
Supapă de reținere, prinderi Mamă/Mamă, tija din plastic
Válvula antiretorno a disco, hembra-hembra con eje en plástico
Rückschlagventil, Anschlüsse FF, Schaft aus Kunststoff

Code	Size	PN	Pack	Carton
860.04.12	1/2"	25	30	120
860.05.12	3/4"	25	16	64
860.06.12	1"	25	10	60
860.07.12	1"1/4	16	8	32
860.08.12	1"1/2	16	4	24
860.09.12	2"	16	2	12

054

3086



Filter with threaded fitting. Matched with the check valves, it provides proper protection for the pumps.

Stainless steel AISI 304L filter.
Nylon 6.6 threaded fitting.

- Max operating temperature 90 °C

Stainless steel filter for check valves
Filtre en inox pour clapets anti-retour
Фильтр из нержавеющей стали для обратного клапана
Filtru de oțel inox pentru supape de reținere
Filtro en acero inox. para válvula antiretorno
Edelstahlfilter für Rückschlagventile

Code	Size	Pack	Carton
3086 38I	3/8"	10	120
3086 12I	1/2"	10	120
3086 34I	3/4"	10	120
3086 10I	1"	10	100
3086 04I	1"1/4	8	80
3086 02I	1"1/2	8	64
3086 20I	2"	4	40
3086.22.00	2"1/2	3	24
3086.30.00	3"	2	16
3086.40.00	4"	1	8

050

20



Recessed shut-off cock with chrome-plated plug.

Brass body.
Chromed cap and manoeuvering knob.
Elastomer seals.
Threaded connections FF UNI-EN-ISO 228.

- Max operating temperature 110 °C
- Max operating pressure 10 Bar

Recessed shut-off cock with chrome-plated plug
Vanne d'arrêt à encastrer avec capuchon chromé
Встраиваемый стопорный кран с хромированным колпаком
Robinet de oprire încastrabil cu capac cromat
Grifo de bloqueo empotrado con capucha cromado
Einbausperrhahn mit verchromter Kappe

Code	Size	Model	Pack	Carton
20.04.00	1/2"	T	10	40
20.05.00	3/4"	T	5	40

30 mm extension for spacer fitting kit available. See spare parts pricelist. Product code 3516.00.02

053

589



Hydrant box with ball valve with hose connection. Suitable for water.

Brass valve body.
Thick chrome plated brass ball.
Polypropylene well.
PTFE valve seals.
Threaded connections UNI-EN-ISO 228.

- Operating temperature with water 0 - +80 °C

Hydrant box with ball valve with hose connection
Puisard pour l'irrigation avec vanne d'arrêt à bille avec raccord porte-caoutchouc
Водяной гидрант в коробе с шаровым краном со штуцером для шланга
Puț pentru irigare prevăzut cu hidrant de interceptare cu bilă cu prindere suport cauciuc
Grifo de jardín empotrable en suelo, con caja y tapa, con toma para manguera
Schacht für Bewässerung komplett mit Kugelabsperrhydrant mit Schlauchanschluss

Code	Size A	Size B	hose connection size	PN	Pack	Carton
589.05.00	3/4"	3/4"	ø 15	16	1	10
589.06.00	3/4"	1"	ø 20	16	1	10

053

24



Wall siphon for washing machine.

Nickel brass body.
Stainless steel ceiling rose.
Hose connection Ø 22 mm.
Drain pipe connection Ø 32 mm.

- Max operating temperature 100 °C

Wall siphon for washing machine
Siphon mural pour machine à laver
Сифон с настенным креплением для стиральной машины
Sifon de perete pentru mașina de spălat
Sifón de pared para lavarropas
Wandsiphon für Waschmaschinen

Code	Model	Pack	Carton
24.32.10	System	10	40

053


RBM
BrassR

SPARE PARTS

PIÈCES DE RECHANGE

ЗАПЧАСТИ

PIESE DE SCHIMB

REPUESTOS

ERSATZTEILE

1. SPARE PARTS PAG. 365


RBM
BrassR

SPARE PARTS

PIÈCES DE RECHANGE
ЗАПЧАСТИ
PIESE DE SCHIMB
REPUESTOS
ERSATZTEILE

BRASS components spare parts pag. 366



KILMA components spare parts pag. 378



TITA-FIX spare parts pag. 389



SFERIKA spare parts pag. 390



1213



Radial pressure gauge.

Pressure gauge for pressure reducing valves and self-cleaning filters.

Radial pressure gauge
Manomètre radial
Радиальный манометр
Manometru radial
Manómetro Ø 50mm conexión radial
Manometer mit Radialanschluss

Code	Size	Scale (bar)	Pack	Carton
1213.005*	1/4" - Ø 50	0 ÷ 16	1	280

**Spare part for self-cleaning filter series 126*

056

8188



Pressure gauge for Filler feeder series 39 – 3153

Pressure gauge for automatic Filler feeders.

Radial pressure gauge
Manomètre radial
Радиальный манометр
Manometru radial
Manómetro Ø 50mm conexión radial
Manometer mit Radialanschluss

Code	Size	Scale (bar)	Pack	Carton
8188.005*	1/8" - Ø 40	0 ÷ 4	1	1

** Pressure gauge for Filler feeder series 39 – 3153*

056

832



Axial pressure gauge.

Pressure gauge for automatic Alinox feeder.

Axial pressure gauge
Manomètre axial
Осевой манометр
Manometru axial
Manómetro axial
Manometer mit Axialanschluss

Code	Size A	Pack	Carton
83.20.05	1/8"	1	1

056

2549



Axial pressure gauge with red index.

Pressure gauge for standards safety relief valves.

Axial pressure gauge with red index
Manomètre axial avec indice rouge
Осевой манометр с красным указателем
Manometru axial cu indicator roşu
Manómetro axial con indicador rojo
Manometer mit Axialanschluss mit rotem Anzeiger

Code	Model	Size	Scale (bar)	Pack	Carton
2549.005	Meter HC35	1/4" - Ø 50	0 ÷ 4	1	1
2574.005		1/4" - Ø 50	0 ÷ 10	1	1

056

380



Adjustable contact thermostat with spring-loaded pipe clamp.

- Temperature range +20 - +90°C
- Differential 8±3K
- Electrical protection rating IP30
- Thermal gradient <1K/min.
- Maximum head temperature 80°C
- Storage temperature -15 - +60°C
- Contact capacity 16(2.5)A 250V 2.5A 250V
- M20x1.5 fairlead
- Installation on piping

Contact thermostat
Thermostat à contact
Контактный термостам
Termostat cu contact
Termostato de contacto
Kontaktthermometer

Code	Pack	Carton
380.00.02	1	1

056

383



Immersion thermostat with manual reset.

- Triggering temperature (fixed setting): Min. 50 - Max. 120°C
- Fixed setting 100°C
- Triggering tolerance +0/-6°C
- Control head temperature limit 85°C
- Electrical protection rating IP43
- 1/2" conduit connection
- Contact capacity 16(4)A 250V

PED

056

Single immersion thermostat
Thermostat simple à immersion
Погружной одиночный термостам
Termostat independent de imersie
Termostato individual de inmersión
Einzelner Thermostat zum Eintauchen

Code	Pack	Carton
383.00.02	1	1

Spare part for 3603 Series RBM instrument holder manifold

382



Dual immersion thermostat with thermometric conduit, including a manual reset locking thermostat and a regulation thermostat.

- Operating range: Min. 0 - Max. 120°C
- Triggering tolerance: Min. T ±6°C – Max T ±4°C
- Triggering temperature (fixed setting): Min. 50 - Max. 120°C
- Fixed setting 100°C
- Triggering tolerance +0/-6°C
- Control head temperature limit 85°C
- Electrical protection rating IP43
- Contact capacity 16(4)A 250V

056

Dual immersion thermostat
Bi-thermostat simple à immersion
Погружной двойной термостам
Bitermostat de imersie
Doble termostato de inmersión
Doppelthermostat zum Eintauchen

Code	Pack	Carton
382.00.02	1	1

Accessory for 3603 Series RBM instrument holder manifold

625



Safety pressure switch, used to protect, command and control pressure in heating systems.

- Setting range 2 - 5.5 bar
- Minimum differential for reset 0.6 bar
- Maximum sensitive element pressure: 7 bar
- Maximum controlled fluid temperature 120°C
- Allowed pressure switch body temperature: -35 - +80°C
- Electrical protection rating IP44
- G 1/2"F connection with dome

PED

056

Safety pressure switch with manual reset
Pressostat de sécurité à réarmement manuel
Предохранительное реле давления с ручным сбросом
Presostat de siguranţă cu rearmare manuală
Presostato de seguridad con rearme manual
Sicherheitsthermostat manuelle Rückstellung

Code	Size	Calibration (bar)	Pack	Carton
625.02.00	1/2"	2 ÷ 5,5	1	1

Spare part for 3603 Series RBM instrument holder manifold

2240



Low pressure switch, used to command and control pressure in heating systems.

- Setting range 0.5 - 2.5 bar
- Minimum differential for reset 0.5 bar
- Factory setting 0.5 bar
- Maximum sensitive element pressure 6 bar
- Maximum controlled fluid temperature 120°C
- Allowed pressure switch body temperature: -35 - +80°C
- Electrical protection rating IP44
- G 1/2"F connection with dome

056

Low pressure switch with manual reset
Pressostat de minimum à réarmement manuel
Предохранительное реле минимального давления с ручным сбросом
Presostat de minimă presiune cu rearmare manuală
Presostato de mínimo con rearme manual
Druckwächter Mindestdruck manuelle Rückstellung

Code	Size	Calibration (bar)	Pack	Carton
2240.02.00	1/2"	0,5 ÷ 2,5	1	1

Spare part for 3603 Series RBM instrument holder manifold

636



Thermometer. Compliant with INAIL requirements.

- Scale 0-120°C
- Precision class 2
- G 1/2" radial connection

Spare part for 3603 Series RBM instrument holder manifold
Well included in supply

Radial thermometer
Thermomètre radial
Радиальный термометр
Termometru radial
Termómetro radial
Radialer Thermostat

Code	Size	Scale (°C)	Pack	Carton
636.00.50	1/2"	0 ÷ 120	2	1

056

626



Pressure gauge. Compliant with INAIL requirements.

- G 1/4" radial connection

Spare part for 3603 Series RBM instrument holder manifold

Radial pressure gauge
Manomètre radial
Радиальный манометр
Manometru radial
Manómetro Ø 50mm conexión radial
Manometer mit Radialanschluss

Code	Size	Scale (bar)	Pack	Carton
626.02.00	1/4"	0 ÷ 4	1	1
626.02.10*	1/4"	0 ÷ 6	1	1
626.02.20	1/4"	0 ÷ 10	1	1

** Pressure gauge supplied with the instrument holder manifold*

056

639



3-way pressure gauge cock with flange for sample pressure gauge. Compliant with INAIL requirements.

Brass body and lever.
Flange for control pressure gauge: 40 mm.

- Max operating pressure 25 Bar

Spare part for 3603 Series RBM instrument holder manifold

Pressure gauge cock
Robinet porte-manomètre
Кран-держатель манометра
Robinet cu manometru
Grifo portamanómetro
Hahn Manometerhalter

Code	Size	Pack	Carton
639.02.00	1/4"	1	1

056

640



Damper loop

Nickel-plated copper pipe.
Connections G 1/4".

- Max operating pressure 25 Bar

Spare part for 3603 Series RBM instrument holder manifold

Damper loop
Boucle d'amortisseur
Медная петля-амортизатор гидравлического удара
Amortizor pentru reducerea forței loviturilor de berbec
Bucle amortiguador de presión
Dämpferschlaufe

Code	Size	Pack	Carton
640.02.60	1/4"	1	1

056

3604



Control probe holder for thermometer. Compliant with INAIL requirements.

- G 1/2" threaded connection

Spare part for 3603 Series RBM instrument holder manifold

Thermowell
Puisard thermométrique
Корпус-держатель термометров
Teacă termometru
Pozo termométrico
Thermometerschacht

Code	Size	Pack	Carton
3604.04.02	1/2"	1	1

056

891



Spare float unit for "Vasa" - "VasaTre" automatic air vent valves.

Including:
- Cap complete with float;
- Lever;
- Rod;
- Protection cap;
- Plastic protection cap, with venting holes.

Float unit for Vasa - VasaTre
Groupe flotteur pour Vasa - VasaTre
Узел поплавка для Vasa - VasaTre
Grup flotor pentru Vasa - VasaTre
Grupo flotador para Vasa - VasaTre
Baugruppe Schwimmer für Vasa - VasaTre

Code	Size	Pack	Carton
891.00.00	U	10	10

U = Universal

056

875



Complete cap unit for thermostatically controlled valves.

Complete cap unit for thermostatically controlled valves
Groupe piston complet pour vannes thermostatiques
Узел колпачка в полной комплектации для терморегулирующих клапанов
Grup capișon complet pentru robineți termostatizabili
Grupo de tija completo para válvulas termostatizables
Baugruppe Hauben komplett für mit Thermostat ausrüstbare Ventile

Code	Pack	Carton
87.50.03*	1	1
3517.00.02**	1	1

**Brass cap unit suitable for valve size 3/8" - 1/2" - 3/4"*
***Brass cap unit suitable for valve size 1"*

056

3515



Complete cap kit for valves with thermostatic option with presetting.

Kit inclusive of:
- no. 10 complete cap units;
- no. 10 adhesive discs with markings for the 6 adjustment positions;
- no. 1 cap adjusting spanner.

Complete cap kit for valves with thermostatic option with presetting
Kit groupe piston complet pour vannes thermostatiques avec préréglage
Узел колпачка в полной комплектации для терморегулирующих клапанов с предварительным регулированием
Kit grup capișon complet pentru robineți termostatizabili cu reglare prealabilă
Kit de grupo de tija completo para válvulas termostatizables con pre-regulación
Bausatz Baugruppe Hauben komplett mit Thermostat ausrüstbare Ventile mit Voreinstellung

Code	Pack	Carton
3515.00.00*	1	1

** Brass cap unit suitable for valve size 3/8" - 1/2" - 3/4"*

056

33



Mechanical extractor.

Can be used to remove the cap unit from the thermostatic valve body, with the system running.

Compatible with size RBM 3/8" - 1/2" - 3/4" thermostatic valves

Mechanical extractor
Extracteur mécanique
Механический съемник
Extractor mecanic
Extractor mecánico
Mechanischer Auswerfer

Code	Pack	Carton
33.00.00	1	1

Gasket kit for mechanical extractor
Kit garnitures pour extracteurs mécanique
Комплект прокладок для механического экстрактора
Kit garnituri pentru extractor mecanic
Kit de juntas para extractor mecánico
Bausatz Dichtungen für mechanischen Auswerfer

Code	Pack	Carton
2740.00.00	1	1

056

3518



Kit with nut, spherical fitting and probe for series 3101 thermostatic single/ double pipe valves.

Kit inclusive of:
- Nut;
- Spherical fitting;
- Flat seat gasket;
- Probe guide;
- L110 mm standard length probe.

Nut and spherical fitting for iron and copper valves, with O-Ring
Écrou et sphérique pour vannes en fer et en cuivre, avec O-Ring
Гайка и шарик для железных и медных клапанов с кольцевым уплотнителем
Piuliță și șurub sferic pentru robineți din fier și cupru, cu garnitură o-ring
Tuerca y racor esférico para válvulas de hierro y cobre con o-ring
Mutter und Rundscheibe für Eisen- und Kupferventile, mit O-Ring

Code	Size	Pack	Carton
3518.04.02	1/2"	1	1
3518.05.02	3/4"	1	1
3518.06.02	1"	1	1

056

307



Wrench for spherical fittings.

Wrench for spherical fittings.
Clés pour sphériques.
Ключ для снятия шариков.
Cheie pentru șuruburi sferice.
Llave para racores esféricos.
Schlüssel für Rundscheibe.

Code	Size	Description	Figure	Pack	Carton
307.00.00	3/8" - 1/2"	-	1	5	5
307.00.10	-	Monoflux - Uniflux	2	1	1

056

2273



Specific tool for assembling vandal-proof, anti-tamper knob.

Tool provided with number 12 fixing screws.

Specific tool for assembling vandal-proof, anti-tamper knob
Outil spécifique pour le montage de la manette anti-vandalisme et anti-manœuvre
Специальный инструмент для монтажа с антивандальным и противовзломным регулятором
Unealtă specială pentru montarea manetei de protecție împotriva vandalismului și modificărilor
Herramienta especifica para montar la manivela antivandálica y contra manipulaciones indebidas
Spezifische Werkzeug zur Montage des vandalen- und sabotagesicheren Drehknopfes

Code	Pack	Carton
227.30.05	1	1

056

3097



Hand wheel for thermostatically controlled valve.

Hand wheel for thermostatically controlled valve
Volant pour robinet thermostatique
Маховик для терморегулирующего клапана
Roată de mână pentru robinet termostatizabil
Volante para válvula termostatizable
Handrad für mit Thermostat ausrüstbares Ventil

Code	Size	Pack	Carton
309.70.03	U	1	1

U = Universal

056

2587



Hand wheel for manual valve.

Hand wheel for manual valve, white version
Volant pour vanne manuelle, version blanc
Маховик для ручного клапана, версия белого цвета
Roată de mână pentru robinet manual, versiune albă
Volante para válvula manual, versión blanco
Handrad für manuelles Ventil, Ausführung weiß

Code	Size	Pack	Carton
2587.003	3/8" - 1/2"	1	1
3310.13	3/4"	1	1
3320.13	1"	1	1
3330.13	1"1/4	1	1

Hand wheel for manual valve, chrome-plated version
Volant pour vanne manuelle, version chromé
Маховик для ручного клапана, версия хромированная
Roată de mână pentru robinet manual, versiune cromată
Volante para válvula manual, versión cromado
Handrad für manuelles Ventil, Ausführung verchromt

Code	Size	Pack	Carton
2587.053	3/8" - 1/2"	1	1

Hand wheel for manual Jet-line valve, white version
Volant pour vanne manuelle Jet-line, version blanc
Маховик для ручного клапана Jet-line, версия белого цвета
Roată de mână pentru robinet manual Jet-line, versiune albă
Volante para válvula manual Jet-line, versión blanco
Handrad für manuelles Ventil Jet-line, Ausführung weiß

Code	Size	Pack	Carton
3512.005	3/8" - 1/2" Jet-line	1	1

056

2711



Cap for lockshield valve.

Cap for lockshield valve, white version
Capuchon pour détendeur, version blanc
Колпачок для настроечного клапана, версия белого цвета
Capac pentru detentor, versiune albă
Capucha para detentor, versión blanco
Kappe für Rücklaufverschraubung, Ausführung weiß

Code	Size	Pack	Carton
2711.005	3/8" - 1/2"	1	1
3511.005	3/4" - 1" - 1"1/4	1	1

Cap for lockshield valve, chrome-plated version
Capuchon pour détendeur, version chromé
Колпачок для настроечного клапана, версия хромированная
Capac pentru detentor, versiune cromată
Capucha para detentor, versión cromado
Kappe für Rücklaufverschraubung, Ausführung verchromt

Code	Size	Pack	Carton
2711.055	3/8" - 1/2"	1	1

Cap for Jet-line lockshield valve, white version
Capuchon pour détendeur Jet-line, version blanc
Колпачок для настроечного клапана Jet-line, версия белого цвета
Capac pentru detentor Jet-line, versiune albă
Capucha para detentor Jet-line, versión blanco
Kappe für Rücklaufverschraubung Jet-line, Ausführung weiß

Code	Size	Pack	Carton
3511.005	3/4" - 1" - 1"1/4	1	1

056

2440



Complete adjustment unit for "Mono-Zona" manifold zone valve.

Complete adjustment unit for "Mono-Zona" manifold zone valve
Groupe de réglage complet pour vanne de zone collecteur « Mono-Zone »
Регулировочный узел в сборке для зонного клапана коллектора "Mono-Zona"
Grup de reglare complet pentru ventilul de zonă colector „Mono-Zonă"
Grupo de regulación completo para válvula de zona colector "Mono-Zona"
Baugruppe Regulierung komplett für Zonenventil Sammelbehälter "einzonig"

Code	Size	Pack	Carton
244.00.13	U	1	1

U = Universal

056

2343



Cap unit plus screw for zone valves.

Cap unit plus screw for zone valves.
Groupe capuchon plusieurs vis pour vannes de zone.
Узел колпачка с винтом для зонных клапанов.
Grup capac și șurub pentru ventile de zonă.
Grupo capucha más tornillos para válvulas de zona.
Baugruppe Kappe plus Schraube für Zonenventile.

Code	Size	Pack	Carton
234.30.03	U	1	1

U = Universal

056

8780



1/2" screw unit to be adjusted with butterfly handwheel.

For Monoblock-Sanitario M.S. manifold

Screw unit adjusted with butterfly handwheel
Groupe vis de réglage avec volant papillon
Узел кран-букса с маховиком «бабочка»
Grupul cap cu ventil - reglare cu roată tip fluture
Grupo vitón de regulación con volante de mariposa
Baugruppe Einstellschraube mit Flügelradeinstellung

Code	Pack	Carton
878.00.05	1	1

056

8780



1/2" screw unit with screwdriver adjustment.

For Monoblock-Sanitario M.S. manifold

Screw unit screwdriver adjustment
Groupe vis de réglage avec tournevis
Узел кран-букса с регулировкой отверткой
Grupul cap cu ventil - reglare cu șurubelnița
Grupo vitón de regulación con destornillador
Baugruppe Einstellschraube mit Schraubendreher-Einstellung

Code	Pack	Carton
878.00.15	1	1

056

929



Complete plastic case for the Domestic Monoblock D.S. manifold

Monoblock Sanitario M.S. water system manifold case 5+3 branches
Boîte collecteur sanitaire Monoblock Sanitaire M.S. 5+3 départs
Коробка коллектора воды для хозяйственных нужд Monoblock Sanitario M.S. 5+3 патрубков
Casetă colector sanitar Monoblock Sanitario M.S. 5+3 conexiuni
Caja de colector sanitario Monoblock Sanitario M.S. 5+3 ramales
Kasten Sanitär-Sammelbehälter Sanitär-Monoblock M.S. 5+3 Unterbrechungen

Code	Model	Pack	Carton
9290.00.03*	CFF	1	1
9290.00.13**	CCF	1	1

** Part specific for manifold code 967.00.00*
*** Part specific for manifold code 967.00.10*

Monoblock Sanitario M.S. water system manifold case 6+4 branches
Boîte collecteur sanitaire Monoblock Sanitaire M.S. 6+4 départs
Коробка коллектора воды для хозяйственных нужд Monoblock Sanitario M.S. 6+4 патрубков
Casetă colector sanitar Monoblock Sanitario M.S. 6+4 conexiuni
Caja de colector sanitario Monoblock Sanitario M.S. 6+4 ramales
Kasten Sanitär-Sammelbehälter Sanitär-Monoblock M.S. 6+4 Unterbrechungen

Code	Model	Pack	Carton
9290.00.53*	CFF	1	1
9290.00.63**	CCF	1	1

** Part specific for manifold code 903.00.50*

056

2155



Screw for closing plastic box cover

Screw for closing plastic box cover
Vis pour fermeture couvercle boîtes en plastique
Винт для фиксации пластиковой крышки коробки
Șurub pentru închiderea capacului casetelor din plastic
Tornillo de cierre de tapa cajas de plástico
Schraube zum Verschluss des Deckels von Kunststoffkästen

Code	L (mm)	Pack	Carton
215.50.35*	35	1	1
215.50.05	60	1	1

056

8167



Complete cartridge for RinoxPlus M RinoxPlusSmart M diaphragm pressure reducing valve.

Complete cartridge for RinoxPlus M RinoxPlusSmart M diaphragm pressure reducing valve (800 µm)
Tamis complet pour réducteur de pression à membrane RinoxPlus M et RinoxPlusSmart M (800 µm)
Мембранный картридж в сборе для редуктора давления RinoxPlus M и RinoxPlusSmart M (800 мкм)
Cartuș complet pentru reductorul de presiune cu membrană RinoxPlus M și RinoxPlusSmart M (800 µm)
Cartucho completo para reductor de presión de membrana RinoxPlus M y RinoxPlusSmart M (800 µm)
Kompletter Einsatz für Membrandruckminderer RinoxPlus und RinoxPlusSmart M (800 µm)

Code	Size	Pack	Carton
8167.003	1/2" - 3/4"	1	1
8201.003	1"	1	1
8202.003	1"1/4	1	1
8203.003	1"1/2 - 2"	1	1

056

7367



Filter for RinoxPlus M and RinoxPlusSmart M diaphragm pressure reducing valve.

Filter for RinoxPlus M and RinoxPlusSmart M diaphragm pressure reducing valve (800 µm)
Filtre pour réducteur de pression RinoxPlus M et RinoxPlusSmart M à membrane (800 µm)
Фильтр в сборе для редуктора давления RinoxPlus M и RinoxPlusSmart M (800 мкм)
Filtru pentru reductorul de presiune RinoxPlus M și RinoxPlusSmart M cu membrană (800 µm)
Filtro para reductor de presión RinoxPlus M y RinoxPlusSmart M con membrana (800 µm)
Filter für Membrandruckminderer RinoxPlus und RinoxPlusSmart M (800 µm)

Code	Size	Pack	Carton
7367.005	1/2" - 3/4"	1	1
7387.005	1"	1	1
7401.005	1"1/4	1	1

056

8454



Cartridge for automatic flow control valve.

Manual cartridge.

Cartridge for automatic flow control valve
Tamis pour stabilisateur automatique de débit
Картридж для автоматического регулятора напора
Cartuș pentru stabilizatorul automat de debit
Cartucho para estabilizador automático de caudal
Einsatz für automatischen Durchfluss-Stabilisator

Code	Colour	Flow rate (m^3/h)	Pack	Carton
845.40.05	B	0,100 - 0,412	1	1
845.40.15	G	0,157 - 0,609	1	1
845.40.25	RW	0,275 - 0,825	1	1
845.40.55	RG	0,406 - 1,270	1	1

B = Black
G = Green
RW = Red - b. white
RG = Red - b. grey

056

8455



Cartridge for pressure independent control valve.

Cartridge can be motorised.

Cartridge for pressure independent control valve
Tamis pour vanne de réglage indépendante de la pression
Картридж для клапана с независимой регулировкой давления
Cartuș pentru supapa de reglare independentă a presiunii
Cartucho para válvula de regulación independiente de la presión
Einsatz für unabhängiges Druckregelventil

Code	Colour	Flow rate (m³/h)	Pack	Carton
845.50.05	G	0,057 - 0,575	1	1
845.50.55	B	0,064 - 1,110	1	1

G = O.R. Grey
B = O.R. Black

056

8852



Cartridge for differential pressure control and regulating valve.

Cartridge for differential pressure control and regulating valve
Tamis pour vanne de contrôle et de réglage de la pression différentielle
Картридж для клапана контроля и регулировки дифференциального давления
Cartuș pentru supapa de control și reglare a presiunii diferențiale
Cartucho para válvula de control y regulación de la presión diferencial
Einsatz für Steuer- und Ausgleichsventil Differentialdruck

Code	DP (kPa)	Flow rate (m³/h)	Pack	Carton
885.20.25	20	0,050 - 0,960	1	1
885.20.35	30	0,050 - 1,419	1	1

056

8853



Capillary pipe for differential pressure control and balancing valve.

Capillary pipe for differential pressure control and balancing valve
Tube capillaire pour vanne de contrôle et d'équilibrage de la pression différentielle
Капиллярная трубка для клапана контроля и балансировки дифференциального давления
Tub capilar pentru supapa de control și echilibrare a presiunii diferențiale
Tubo capilar para válvula de control y balance de la presión diferencial
Kapillarschlauch für Steuer- und Ausgleichsventil Differentialdruck

Code	Pack	Carton
885.30.05	1	1

056

3238



Adaptor ring nut connection M28x1.5 / M30x1.5 to couple thermostatic head.

Spare part for Fixed Point (FR) DN25 booster module

Adaptor ring nut M28x1.5 / M30x1.5
Bague adaptatrice M28x1,5 / M30x1,5
Зажимное адаптерное кольцо M28x1,5 / M30x1,5
Inel adaptator M28x1,5 / M30x1,5
Virola adaptadora M28x1,5 / M30x1,5
Passring M28x1,5 / M30x1,5

Code	Pack	Carton
3238.00.02	1	1

056

590



Thermostatic control for fixed point mixing units and zone modules.

- Temperature adjustment range: 25-52 °C (Model TL50) / 40-70 °C (Model TL70S)

Spare part for Fixed Point (FR) DN25 booster module
Specific accessory for Micromega MIX series 3240.

Thermostatic control
Commande thermostatique
Термостатическое управление
Comandă termostatică
Mando termostático
Thermostatsteuerung

Code	Model	Pack	Carton
590.00.50*	TL50	1	1
3218.00.12*	TL70 M	1	1
3218.00.02**	TL70 S	1	1

**Connection M30x1.5*
***Connection M28x1.5*

056

3244



Safety thermostat.

Spare part for Fixed Point (FR) DN25 booster module

Safety thermostat
Thermostat de sécurité
Предохранительный термостат
Termostat de siguranță
Termostato de seguridad
Sicherheitsthermostat

Code	Pack	Carton
3244.00.02	1	1

(-) price on request

056

8519



Cartridge for MG1 magnetic sludge remover filter

Spare part for MG1 magnetic sludge remover filter Series 3070.

Cartridge for MG1 magnetic sludge remover filter (800 µm)
Tamis pour filtre séparateur de boues magnétique MG1 (800 µm)
Картридж для грязеотделительного магнитного фильтра MG1 (800 мкм)
Cartuș pentru filtru denisipator magnetic MG1 (800 µm)
Cartucho para filtro desfangador magnético MG1 (800 µm)
Einsatz für magnetischen Schlammabscheidefilter MG1 (800 µm)

Code	Size	Pack	Carton
851.90.15	3/4"	1	1

Cartridge for magnetic sludge remover filter MG1 (400 µm) TZB
Tamis pour filtre séparateur de boues magnétique MG1 (400 µm) TZB
Картридж для грязеотделительного магнитного фильтра MG1 (400 мкм) TZB
Cartuș pentru filtru denisipator magnetic MG1 (400 µm) TZB
Cartucho para filtro desfangador magnético MG1 (400 µm) TZB
Einsatz für magnetischen Schlammabscheidefilter MG1 (400 µm) TZB

Code	Size	Pack	Carton
851.90.35	3/4"	1	1

056

1041

Cartridge for line filter.



Spare part for line filters Series 3 - 4

Cartridge for line filter (800 µm)
Tamis pour filtre de ligne (800 µm)
Картридж для линейного фильтра (800 мкм)
Cartuş pentru filtrul de linie (800 µm)
Cartucho para filtro de línea (800 µm)
Einsatz für Leitungsfilter (800 µm)

Code	Size	Pack	Carton
1041.005	3/8" - 1/2"	1	1
9290.05	3/4"	1	1
9590.05	1"	1	1
9300.05	1"1/4	1	1
9310.05	1"1/2 - 2"	1	1
1156.003	2"1/2 - 3" - 4"	1	1

Cartridge for line filter (300 µm)
Tamis pour filtre de ligne (300 µm)
Картридж для линейного фильтра (300 мкм)
Cartuş pentru filtrul de linie (300 µm)
Cartucho para filtro de línea (300 µm)
Einsatz für Leitungsfilter (300 µm)

Code	Size	Pack	Carton
1041.015	3/8" - 1/2"	1	1
9290.15	3/4"	1	1
9590.15	1"	1	1
9300.15	1"1/4	1	1
9310.15	1"1/2 - 2"	1	1
1156.013	2"1/2 - 3" - 4"	1	1

Cartridge for line filter (100 µm)
Tamis pour filtre de ligne (100 µm)
Картридж для линейного фильтра (100 мкм)
Cartuş pentru filtrul de linie (100 µm)
Cartucho para filtro de línea (100 µm)
Einsatz für Leitungsfilter (100 µm)

Code	Size	Pack	Carton
1041.055	3/8" - 1/2"	1	1
9290.55	3/4"	1	1
9590.55	1"	1	1
9300.55	1"1/4	1	1
9310.55	1"1/2 - 2"	1	1

Cartridge for line filter (50 µm)
Tamis pour filtre de ligne (50 µm)
Картридж для линейного фильтра (50 мкм)
Cartuş pentru filtrul de linie (50 µm)
Cartucho para filtro de línea (50 µm)
Einsatz für Leitungsfilter (50 µm)

Code	Size	Pack	Carton
1041.025	3/8" - 1/2"	1	1
9290.25	3/4"	1	1
9590.25	1"	1	1
9300.25	1"1/4	1	1
9310.25	1"1/2 - 2"	1	1
1156.023	2"1/2 - 3" - 4"	1	1

056

6065



Cartridge for Y-shaped filter.

Spare part for Y-shaped filter Series 858.

Cartridge for Y-shaped filter (800 µm)
Tamis pour filtre en Y (800 µm)
Картридж для Y-образного фильтра (800 мкм)
Cartuş pentru filtrul în Y (800 µm)
Cartucho para filtro en Y (800 µm)
Einsatz für Y-Filter (800 µm)

Code	Size	Pack	Carton
606.50.05	1/2″	1	1
606.20.05	3/4″	1	1
605.90.05	1″	1	1
606.80.05	1″1/4	1	1
607.10.05	1″1/2	1	1
607.40.05	2″	1	1

Cartridge for Y-shaped filter (300 µm)
Tamis pour filtre en Y (300 µm)
Картридж для Y-образного фильтра (300 мкм)
Cartuş pentru filtrul în Y (300 µm)
Cartucho para filtro en Y (300 µm)
Einsatz für Y-Filter (300 µm)

Code	Size	Pack	Carton
606.50.15	1/2″	1	1
606.20.15	3/4″	1	1
605.90.15	1″	1	1
606.80.15	1″1/4	1	1
607.10.15	1″1/2	1	1
607.40.15	2″	1	1

Cartridge for Y-shaped filter (100 µm)
Tamis pour filtre en Y (100 µm)
Картридж для Y-образного фильтра (100 мкм)
Cartuş pentru filtrul în Y (100 µm)
Cartucho para filtro en Y (100 µm)
Einsatz für Y-Filter (100 µm)

Code	Size	Pack	Carton
606.50.55	1/2″	1	1
606.20.55	3/4″	1	1
605.90.55	1″	1	1
606.80.55	1″1/4	1	1
607.10.55	1″1/2	1	1
607.40.55	2″	1	1

056

1171



Self-cleaning filter cartridge.

Spare part for self-cleaning filter Series 126.

Cartridge for self-cleaning filter (800 µm)
Tamis pour filtre autonettoyant (800 µm)
Самоочищающийся картридж фильтра (800 мкм)
Cartuş pentru filtrul cu autocurăţare (800 µm)
Cartucho de filtro autolimpiante (800 µm)
Einsatz für Selbstreinigungsfilter (800 µm)

Code	Size	Pack	Carton
1171.003	3/8" - 1/2"	1	1
1172.003	3/4"	1	1
1173.003	1"	1	1
1200.003	1"1/4	1	1
1201.003	1"1/2 - 2"	1	1
1215.003	2"1/2 - 3" - 4"	1	1

Self-cleaning filter cartridge (300 µm)
Tamis pour filtre autonettoyant (300 µm)
Самоочищающийся картридж фильтра (300 мкм)
Cartuş pentru filtrul cu autocurăţare (300 µm)
Cartucho de filtro autolimpiante (300 µm)
Einsatz für Selbstreinigungsfilter (300 µm)

Code	Size	Pack	Carton
1171.013	3/8" - 1/2"	1	1
1172.013	3/4"	1	1
1173.013	1"	1	1
1200.013	1"1/4	1	1
1201.013	1"1/2 - 2"	1	1
1215.013	2"1/2 - 3" - 4"	1	1

Self-cleaning filter cartridge (100 µm)
Tamis pour filtre autonettoyant (100 µm)
Самоочищающийся картридж фильтра (100 мкм)
Cartuş pentru filtrul cu autocurăţare (100 µm)
Cartucho de filtro autolimpiante (100 µm)
Einsatz für Selbstreinigungsfilter (100 µm)

Code	Size	Pack	Carton
1171.023	3/8" - 1/2"	1	1
1172.023	3/4"	1	1
1173.023	1"	1	1
1200.023	1"1/4	1	1
1201.023	1"1/2 - 2"	1	1
1215.023	2"1/2 - 3" - 4"	1	1

056

3696



Metal cover and frame for unit boxes Kilma-Evo, Kilma-Econblock, Kilma-Basic2 and Kilma-Easy2.

Spare part for box series 9241

Metal cover and frame for unit boxes Kilma-Evo, Kilma-Econblock, Kilma-Basic2 and Kilma-Easy2
Couvercle en métal et cadre pour les boîtes des unités de contrôle Kilma-Evo, Kilma-Econblock, Kilma-Basic2 et Kilma-Easy2
Металлическая крышка и рамка для коробок установок Kilma-Evo, Kilma-Econblock, Kilma-Basic2 и Kilma-Easy2
Capac din metal şi ramă pentru cutiile unităţilor de control Kilma-Evo, Kilma-Econblock, Kilma-Basic2 e Kilma-Easy2
Tapa de metal y marco para cajas de centralitas Kilma-Evo, Kilma-Econblock, Kilma-Basic2 y Kilma-Easy2
Metallabdeckung und -rahmen für Kasten zur Aufnahme der Steuergeräte Kilma-Evo, Kilma-Econblock, Kilma-Basic2 und Kilma-Easy2

Code	LxH (mm)	Pack	Carton
3696.80.52	800 x 580	1	1
3696.10.52	1000 x 580	1	1
3696.12.52	1200 x 580	1	1

(-) price on request

056

2606



Plastic cover for BOX1 cases.

Use 5 plastic screws series 2155 to fasten cover (see page 373)

Plastic cover for BOX1 cases
Couvercle en plastique pour boîte BOX1
Пластиковая крышка для коробки BOX1
Capac din plastic pentru casete BOX1
Tapa de plástico para cajas BOX1
Kunststoffdeckel für Kasten BOX1

Code	LxH (mm)	Pack	Carton
2606.40.00	400 x 500	1	1
2606.60.00	600 x 500	1	1
2606.80.00	800 x 500	1	1
2606.10.00	1000 x 500	1	1

056

2261



Plastic lid for Quickbox case.

Use 6 plastic screws series 2155 to fasten cover (see page 373)

Plastic cover for Quickbox case
Couvercle en plastique pour boîte Quickbox
Пластиковая крышка для коробки Quickbox
Capac din plastic pentru caseta Quickbox
Tapa de plástico para caja Quickbox
Kunststoffdeckel für Quickbox Kasten

Code	LxH (mm)	Pack	Carton
2261.55.02	550 x 450	1	1
2261.70.02	700 x 450	1	1
2261.85.02	850 x 450	1	1

056

4566



Mixing unit with by-pass.

For Kilma-Evo-RF and Kilma-Evo-RM control units.

EVO control units mixing unit
Groupe de mélange unités de contrôle EVO
Смесительный узел установки EVO
Grup de amestec unități de control EVO
Grupo mezclador centralitas EVO
Mischeinheit Steuergeräte EVO

Code	Pack	Carton
456.60.03	1	1

056

875



Cap group and rod/ring nut group.

For mixing unit code 4566.003

Cap group

Cap group
Groupe piston
Колпачок
Grup capișon
Grupo de tija
Baugruppe Hauben

Code	Pack	Carton
87.50.33	1	1

Rod/ring nut group
Groupe tige/bague
Шток/хомут
Grup tijă/inel
Grupo asta/virola
Einheit Schaft/Gewindering

Code	Pack	Carton
462.20.03	1	1

056

590



Thermostatic control for fixed point mixing units and zone modules.

- Temperature adjustment range: 25-52 °C (Model TL50) / 40-70 °C (Model TL70S)

Spare part for Fixed Point (FR) DN25 booster module
Specific accessory for Micromega MIX series 3240.

Thermostatic control
Commande thermostatique
Термостатическое управление
Comandă termostatică
Mando termostático
Thermostatsteuerung

Code	Model	Pack	Carton
590.00.50*	TL50	1	1
3218.00.12*	TL70 M	1	1
3218.00.02**	TL70 S	1	1

**Connection M30x1.5*
*** Connection M28x1.5*

056

8041



Modulating actuator.

For Kilma-Evo-RM control unit.

- 24V AC 0-10V power supply

To be matched with mixing unit code 4566.003

Modulating actuator
Servomoteur modulant
Модулирующий сервопривод
Servomotor cu modulație
Servomotor de modulación
Modulations-Servomotor

Code	Pack	Carton
804.10.05	1	1

056

373



Modulating actuator.

For Kilma-Evo-RM control unit.

- Power supply 230V AC
- 4W consumption
- Frequency 50Hz
- Electric protection IP42
- Operating temperature -5 ÷ +60 °C
- Triggering time 240 seconds

CE

Modulating actuator
Servomoteur modulant
Модулирующий сервопривод
Servomotor cu modulație
Servomotor de modulación
Modulations-Servomotor

Code	Pack	Carton
373.00.20	1	1

056

3612



Digital electronic temperature controller with climatic compensation function.

For Kilma-Evo-RM - Kilma Basic2 control unit

CE

Kilma EVO 2 HC digital electronic controller
Régulateur électronique digital Kilma EVO 2HC
Цифровой электронный регулятор Kilma EVO 2 HC
Regulator electronic digital Kilma EVO 2 HC
Regulador electrónico digital Kilma EVO 2 HC
Elektronischer Digital-Regler Kilma EVO 2 HC

Code	Model	Pack	Carton
3612.00.02	Kilma EVO2 HC	1	1

056

2001



Fixed-point electrical unit.

Electric control unit for electrical power supply of the thermostat, the pump and the safety thermostat;
contact without power supply (potential-free contact).

Including housing case, pump connection cable and safety thermostat connection.

CE

Fixed Point transformer
Unité de contrôle électrique Point Fixe
Электрическая установка Punto Fisso
Unitate de control electrică Punct Fix
Centralita eléctrica Punto Fijo
Elektrisches Steuergerät Festpunkt

Code	Model	Pack	Carton
2001.00.00*	Without Microprocessor	1	1
2001.00.60**	With Microprocessor	1	1

** Suitable for polymer Econblock RF control units*
Suitable for RF copper control units and sub-control units.

056

577



Fixed-point electrical board.

Electrical circuit for the thermostat, pump, safety thermostat power supply connection; free-voltage contact (potential-free contact).

CE

Fixed Point electrical board
Carte électrique Point Fixe
Электрическая плата Punto Fisso
Placă electrică Punct Fix
Tarjeta eléctrica Punto Fijo
Elektrische Karte Festpunkt

Code	Model	Pack	Carton
577.00.02*	Without Microprocessor	1	1
577.00.12**	With Microprocessor	1	1

** Suitable for polymer Econblock RF control units*
Suitable for RF copper control units and sub-control units.

056

4021



Safety thermostat and connector for safety thermostat connection.

Well insertion.
Bimetallic type.

- Tripping temperature 55 °C

Safety thermostat and connector for safety thermostat connection
Thermostat de sécurité et connecteur pour le branchement du thermostat de sécurité
Предохранительный термостат и разъём для подсоединения предохранительного термостата
Termostat de siguranță și conector pentru conectarea termostatului de siguranță
Termostato de seguridad y conector para la conexión del termostato de seguridad
Sicherheitsthermostat und Stecker für den Anschluss Sicherheitsthermostat

Code	Model	Pack	Carton
402.10.15*	Thermostat	1	1
480.00.02**	Thermostat	1	1
265.90.05	Connector	1	1

** Suitable for polymer Econblock RF control units*
*** Suitable for RM / RF copper control units and sub-control units.*

056

3404



1/2" probe holder well with copper conduit.

For Kilma-Evo-RM control unit.

1/2" probe holder well with copper conduit
Support de sonde de 1/2" avec gaine en cuivre
Поддон держателя датчика на 1/2" с медной оплёткой
Teacă suport sondă de 1/2" cu manta din cupru
Pozo portasonda de 1/2" con funda de cobre
Sondenhalterschacht 1/2" mit Kupferummantelung

Code	Pack	Carton
340.40.05	1	1

056

2448



1/2" probe holder well with copper conduit for TL50 thermostatic head.

For Kilma-Evo/Econblock RF control unit.

1/2" probe holder well with copper conduit for TL50 thermostatic head
Support de sonde de 1/2" avec gaine en cuivre pour tête thermostatique TL50
Корпус-держатель датчика на 1/2" с медной оплёткой для термостатической головки TL50
Teacă suport sondă de 1/2" cu manta din cupru pentru capul termostatic TL50
Pozo portasonda de 1/2" con funda de cobre para cabezal termostático TL50
Sondenhalterschacht 1/2" mit Kupferummantelung für Thermostatkopf TL50

Code	Pack	Carton
244.80.23	1	1

056

303



Two dial thermometers complete with thermowell.

- Thermometer scale 0 ÷ 80 °C
- G1/2" connection (UNI-EN-ISO 228)

Two dial thermometers complete with thermowell
Couple de thermomètres à cadran avec puits thermométrique
Пара термометров со шкалой в комплекте с корпусом-держателем термометров
Pereche de termometre cu cadran, dotate cu teacă pentru termometru
Par de termómetros con cuadrante con pozo termométrico
Quadranten-Thermometerpaar komplett mit Temperaturanzeige-Fühlerschacht

Code	Size	Pack	Carton
303.04.00	Ø 40	1	1

056

875



Complete cap unit for valves with thermostatic option compact manifolds.

Complete cap unit for thermostatically controlled valves
Groupe piston complet pour vannes thermostatiques
Узел колпачка в полной комплектации для терморегулирующих клапанов
Grup capişon complet pentru robineţi termostatizabili
Grupo de tija completo para válvulas termostatizables
Baugruppe Hauben komplett für mit Thermostat ausrüstbare Ventile

Code	Pack	Carton
87.50.23	1	1

Can be used for a 1-way manifold (cod. 3616.06.00)

Cap group
Groupe piston
Колпачок
Grup capişon
Grupo de tija
Baugruppe Hauben

Code	Pack	Carton
87.50.73	1	1

To be used with Kilma Zone manifolds (code 3617.06.00, 3618.06.00, 3619.06.00 and 3620.06.00)

Rod/ring nut group
Groupe tige/bague
Шток/хомут
Grup tijă/inel
Grupo asta/virola
Einheit Schaft/Gewindering

Code	Pack	Carton
911.90.03	1	1

To be used with Kilma Zone manifolds (code 3617.06.00, 3618.06.00, 3619.06.00 and 3620.06.00)

056

2250



Flow meter with lockshield valve function and flow rate indicator.

- Temperature range 0 ÷ 80 °C
- Max operating pressure 10 Bar

Flow meter with lockshield valve function and flow rate indicator
Débitmètre avec fonction de détendeur et indicateur de débit
Расходомер потока с функцией настроечного клапана и индикатора расхода
Debitmetru cu funcţie de detentor şi indicator de debit
Flujómetro con función de detentor e indicador del caudal
Durchflussmessgerät mit Rücklaufverschraubungsfunktion und Durchflussanzeige

Code	Adjustment (l/min)	Pack	Carton
2250.00.02	1 ÷ 2	10	10
2250.00.12*	1 ÷ 4	10	10
2250.00.22	0 ÷ 2,5	10	10

** Flow meter provided with pre-assembled kits*

056

1528



Pair of polymer brackets for offset fixing of polymer manifolds, complete with collar series 1410.

- Centre distance 220 mm

For pipes to be assembled with no overlaps.
Suitable with cases code series 2606.
Standard in polymer compact manifolds 1410 series.

Pair of polymer brackets for offset fixing of manifolds, complete with collar
Paire d'étriers en polymère pour la fixation désaxée des collecteurs, dotés d'un collier
Пара скоб из полимерного материала для крепления коллекторов по смещённой оси, в комплекте с хомутом
Pereche de console polimer pentru fixarea nealiniată cu colectoarele, dotate cu colier
Par de bridas de polímero para la fijación desalineada de los colectores, con abrazadera
Bügelpaar aus Polymer zur versetzten Befestigung der Sammler, komplett mit Bund

Code	Pack	Carton
1528.06.00	1	1

056

1000



Pair of polymer brackets for aligned fixing of polymer anti-condensation 1002 series manifolds, complete with collar.

- Centre distance 220 mm

Suitable with cases code series 2606.
Standard in polymer compact manifolds 1002 series.

Pair of polymer brackets for aligned fixing of manifolds, complete with collar
Paire d'étriers en polymère pour la fixation alignée des collecteurs, avec collier
Пара скоб из полимерного материала для выровненного по оси крепления коллекторов, в комплекте с хомутом
Pereche de console din polimeri pentru fixarea aliniată cu colectoarele, dotate cu colier
Par de bridas de polímero para la fijación alineada de los colectores, con abrazadera
Bügelpaar aus Polymer zur ausgerichteten Befestigung der Sammelbehälter, komplett mit Bund

Code	Pack	Carton
1000.06.00	1	1

056

792



Pair of polymer brackets for offset fixing of polymer manifolds, complete with compact brass collar series 2028.

- Centre distance 220 mm

For pipes to be assembled with no overlaps.
Suitable with cases code series 2606.
Standard in brass compact polymer manifolds 2028 series.

Pair of polymer brackets for offset fixing of manifolds, complete with collar
Paire d'étriers en polymère pour la fixation désaxée des collecteurs, dotés d'un collier
Пара скоб из полимерного материала для крепления коллекторов по смещённой оси, в комплекте с хомутом
Pereche de console polimer pentru fixarea nealiniată cu colectoarele, dotate cu colier
Par de bridas de polímero para la fijación desalineada de los colectores, con abrazadera
Bügelpaar aus Polymer zur versetzten Befestigung der Sammler, komplett mit Bund

Code	Pack	Carton
792.06.00	1	1

056

810



Pair of polymer brackets for aligned fixing of polymer manifolds, complete with collar series.

- Centre distance 220 mm

Staffe impiegate nel montaggio delle centraline Kilma.
Fissaggio allineato dei collettori in ottone.

Pair of polymer brackets for aligned fixing of manifolds, complete with collar
Paire d'étriers en polymère pour la fixation alignée des collecteurs, avec collier
Пара скоб из полимерного материала для выровненного по оси крепления коллекторов, в комплекте с хомутом
Pereche de console din polimeri pentru fixarea aliniată cu colectoarele, dotate cu colier
Par de bridas de polímero para la fijación alineada de los colectores, con abrazadera
Bügelpaar aus Polymer zur ausgerichteten Befestigung der Sammelbehälter, komplett mit Bund

Code	Pack	Carton
810.06.00	1	1

056

8629



Thermometer with collar for brackets for 1410 - 2028 and 608 series manifold kits.

- Thermometer scale 0 ÷ 80 °C

Thermometer with collar for brackets for manifold kits
Thermomètre avec collier pour étrier pour kit collecteurs
Термометр с хомутом для скоб для комплекта коллекторов
Termometru cu colier pentru console pentru kituri colectoare
Termómetro con abrazadera para bridas para kit de colectores
Thermometer mit Bund für Bügel für Sammelbehälter-Bausatz

Code	Pack	Carton
862.90.05	1	1

056

829



Multi-way compact manifold complete with valves with thermostatic option and hand wheel.

- Temperature range 0 ÷ 100 °C
- Max operating pressure 10 Bar

Manifold with thermostatic valves
Collecteur avec vannes thermostatiques
Коллектор с терморегулирующими клапанами
Colector cu robineți termostatizabili
Colector con válvulas controladas termostáticamente
Sammelbehälter mit mit Thermostat ausrüstbaren Ventilen

Code	Size	Ways	Pack	Carton
829.26.30	1"	2	1	1
829.06.30	1"	3	1	1
830.06.30	1"	4	1	1
831.06.30	1"	5	1	1
832.06.30	1"	6	1	1
833.06.30	1"	7	1	1
834.06.30	1"	8	1	1
835.06.30	1"	9	1	1
836.06.30	1"	10	1	1
837.06.30	1"	11	1	1
837.12.30	1"	12	1	1
837.13.30	1"	13	1	1

Centre distance between connections via distribution manifolds 50 mm - threading EUROCONUS G3/4" UNI-EN-ISO 228

056

829



Multi-way compact manifold, complete with micrometric lockshield regulating valves with graduated hand wheel

- Temperature range 0 ÷ 100 °C
- Max operating pressure 10 Bar

Manifold with micrometric lockshield regulating valves
Collecteur avec coudes de réglage micrométriques
Коллектор с микрометрическими настроечными клапанами
Colector cu detentori micrometrici
Colector con detentores micrométricos
Sammelbehälter mit mikrometrischer Rücklaufverschraubung

Code	Size	Ways	Pack	Carton
829.26.10	1"	2	1	1
829.06.10	1"	3	1	1
830.06.10	1"	4	1	1
831.06.10	1"	5	1	1
832.06.10	1"	6	1	1
833.06.10	1"	7	1	1
834.06.10	1"	8	1	1
835.06.10	1"	9	1	1
836.06.10	1"	10	1	1
837.06.10	1"	11	1	1
837.12.10	1"	12	1	1
837.13.10	1"	13	1	1

Centre distance between connections via distribution manifolds 50 mm - threading EUROCONUS G3/4" UNI-EN-ISO 228

056

829



Compact manifold, multi-way, complete with flow meters, with lockshield valve and flow indicator function.

- Temperature range 0 ÷ 80 °C
- Max operating pressure 10 Bar

Manifold with flow meters
Collecteur avec débitmètres
Коллектор с расходомерами
Colector cu debitmetre
Colector con flujómetros
Sammelbehälter mit Durchflussmessgeräten

Code	Size	Ways	Pack	Carton
829.26.00	1"	2	1	1
829.06.00	1"	3	1	1
830.06.00	1"	4	1	1
831.06.00	1"	5	1	1
832.06.00	1"	6	1	1
833.06.00	1"	7	1	1
834.06.00	1"	8	1	1
835.06.00	1"	9	1	1
836.06.00	1"	10	1	1
837.06.00	1"	11	1	1
837.12.00	1"	12	1	1
837.13.00	1"	13	1	1

Centre distance between connections via distribution manifolds 50 mm - threading EUROCONUS G3/4" UNI-EN-ISO 228

056

948



Polymer modular manifold, multi-way, complete with valves with thermostatic option and hand wheel.

Internal cavities with thermal insulation and anti-condensation functions.

- Temperature range 5 - 80 °C
- Max. operating pressure 8 Bar

Manifold with thermostatic valves
Collecteur avec vannes thermostatiques
Коллектор с терморегулирующими клапанами
Colector cu robineți termostatizabili
Colector con válvulas controladas termostáticamente
Sammelbehälter mit mit Thermostat ausrüstbaren Ventilen

Code	Size	Ways	Pack	Carton
948.02.30	1"	2	1	1
948.03.30	1"	3	1	1
948.04.30	1"	4	1	1
948.05.30	1"	5	1	1
948.06.30	1"	6	1	1
948.07.30	1"	7	1	1
948.08.30	1"	8	1	1
948.09.30	1"	9	1	1
948.10.30	1"	10	1	1
948.11.30	1"	11	1	1
948.12.30	1"	12	1	1
948.13.30	1"	13	1	1

Centre distance between connections via distribution manifolds 50 mm - threading EUROCONUS G3/4" UNI-EN-ISO 228
Patent No. 262005

056

948



Modular manifold in polymer, multi-way, complete with micrometric lockshield regulating valves and hand wheel.

Internal cavities with thermal insulation and anti-condensation functions.

- Temperature range 5 - 80 °C
- Max. operating pressure 8 Bar

Manifold with micrometric lockshield regulating valves
Collecteur avec coudes de réglage micrométriques
Коллектор с микрометрическими настроечными клапанами
Colector cu detentori micrometrici
Colector con detentores micrométricos
Sammelbehälter mit mikrometrischer Rücklaufverschraubung

Code	Size	Ways	Pack	Carton
948.02.10	1"	2	1	1
948.03.10	1"	3	1	1
948.04.10	1"	4	1	1
948.05.10	1"	5	1	1
948.06.10	1"	6	1	1
948.07.10	1"	7	1	1
948.08.10	1"	8	1	1
948.09.10	1"	9	1	1
948.10.10	1"	10	1	1
948.11.10	1"	11	1	1
948.12.10	1"	12	1	1
948.13.10	1"	13	1	1

Centre distance between connections via distribution manifolds 50 mm - threading EUROCONUS G3/4" UNI-EN-ISO 228
Patent No. 262005

056

948



Polymer modular manifold, multi-way, complete with flow meters, with lockshield valve and flow indicator function.

Internal cavities with thermal insulation and anti-condensation functions.

- Temperature range 5 - 80 °C
- Max. operating pressure 8 Bar

Manifold with flow meters
Collecteur avec débitmètres
Коллектор с расходомерами
Colector cu debitmetre
Colector con flujómetros
Sammelbehälter mit Durchflussmessgeräten

Code	Size	Ways	Pack	Carton
948.02.00	1"	2	1	1
948.03.00	1"	3	1	1
948.04.00	1"	4	1	1
948.05.00	1"	5	1	1
948.06.00	1"	6	1	1
948.07.00	1"	7	1	1
948.08.00	1"	8	1	1
948.09.00	1"	9	1	1
948.10.00	1"	10	1	1
948.11.00	1"	11	1	1
948.12.00	1"	12	1	1
948.13.00	1"	13	1	1

Centre distance between connections via distribution manifolds 50 mm - threading EUROCONUS G3/4" UNI-EN-ISO 228
Patent No. 262005

056

67



Total passage ball valve kit.

Knob operated complete with immersion thermometer with removable rear bulb, MF connections, with OR seal fitting.
Suitable for water, water+ glycol.

- Operating temperature with water -20 - +120 °C
- Thermometer scale 0 ÷ +80 °C

Ball valves kit for manifolds
Kit vannes à bille pour collecteurs
Комплект шаровых клапанов для коллекторов
Kit robineți cu bilă pentru colectoare
Kit de válvulas de bola para colectores
Bausatz Kugelventile für Sammelbehälter

Code	Size	Pack	Carton
67.06.30	1"	1	1

Fitting with OR seal connection.

056

450



Air and water manual discharge terminal unit.

Brass and polymer manifolds kits standard installation.

- Pressure gauge holder connection G 1/8" (for RBM Ø 40 radial pressure gauge - scale 0 - 16 bar - Code 7469.005)

Air and water manual discharge terminal
Groupe terminal de décharge manuelle, air et eau
Завершающий узел ручного сброса воздуха и воды
Grup terminal de evacuare manual pentru aer şi apă
Grupo terminal de purga manual de aire y agua
Abschlusseinheit manueller Luft- und Wasserauslass

Code	Size	Pack	Carton
450.06.50	1"	1	1

056

449



Air and water manual discharge terminal.

Standard installation on delivery line of brass and polymer manifold kits.

- Pressure gauge holder connection G 1/8" (for RBM Ø 40 radial pressure gauge - scale 0 - 16 bar - Code 7469.005)

Air and water automatic discharge terminal unit.
Groupe terminal de décharge automatique, air et eau
Завершающий узел автоматического сброса воздуха и воды.
Grup terminal cu evacuare automată pentru aer şi apă
Grupo terminal de descarga automática, de aire y agua
Abschlusseinheit automatischer Luft- und Wasserauslass

Code	Size	Pack	Carton
449.06.50	1"	1	1

056

910



By-pass group with rotatable elbow fittings for the system filling.

It consists of (loose pieces) :
Automatic air vent;
By-pass adjustment group;
Fittings and connection pipe.

- G 1/8" pressure gauge holder connection (for RBM Ø 40 radial pressure gauge - scale 0-10 bar - Code 832.005)

It allows for by-pass fixed adjustment.

By-pass unit aligned mounting
Groupe By-pass montage aligné
Перепускной клапан (байпас) для выровненной установки
Grup By-pass pentru montare aliniată
Grupo By-pass montaje alineado
Nebenleitungseinheit ausgerichtete Montage

Code	Size	Pack	Carton
910.06.00	1"	1	1

For manifolds kit cod. 1002.XX.XX - 1012.XX.XX Kilma Evo / Eco / Basic / Easy and control units

By-pass unit offset mounting
Groupe By-pass montage désaxé
Перепускной клапан (байпас) со смещенной осью установки
Grup By-pass pentru montare nealiniată
Grupo By-pass montaje desalineado
Nebenleitungseinheit versetzte Montage

Code	Size	Pack	Carton
1529.06.00	1"	1	1

For manifold kits code 1410.XX.XX - 1420.XX.XX, 608.XX.XX - 616.XX.XX and 2028. XX.XX - 2038.XX.XX

056

930



MF 1" fitting.

Terminal unit / bypass unit fitting for connection to compact manifold.

MF 1" fitting
Raccord d'union MF 1"
Соединительный фитинг НАР.-ВНУТР. резьба 1"
Racord de unire Tată-Mamă 1"
Racor de unión MH 1"
Vereinigungsanschluss AG/IG 1"

Code	Pack	Carton
930.06.00	8	8

056

7469





Pressure gauge ø 40. For pressure control.

- Scale 0 - 16 Bar (radial pressure gauge).
- Scale 0 - 10 Bar (axial pressure gauge).

Radial pressure gauge Ø 40
Manomètre radial ø 40
Радиальный манометр ø 40
Manometru radial ø 40
Manómetro radial ø 40
Manometer mit Radialanschluss ø 40

Code	Size	Pack	Carton
746.90.05	1/8"	1	1

Axial pressure gauge Ø 40
Manomètre axial ø 40
Осевой манометр ø 40
Manometru axial ø 40
Manómetro axial ø 40
Manometer mit Axialanschluss ø 40

Code	Size	Scale (bar)	Pack	Carton
83.20.05	1/8"	0 ÷ 10	1	1

056

221



Ball discharge cock, with hose connection and rotating cap.

- Threaded connection M UNI-EN-ISO 228

Ball discharge cock, with hose connection and rotating cap
Robinet de décharge à bille, avec raccord porte-caoutchouc et bouchon pivotant
Сливной кран шарового типа со штуцером для резинового шланга и поворотной заглушкой
Robinet de evacuare cu bilă, cu prindere la suportul pentru furtun și capac rotativ
Grifo de descarga de bola, con conexión portagoma y tapa giratoria
Auslasskugelhahn mit Schlauchanschluss und Drehverschluss

Code	Size	Pack	Carton
221.04.00	1/2"	10	10

056

2292

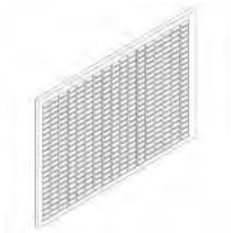

Air filter.

For wall or ceiling dehumidifier and air-conditioning system.

Air filter
Filtre à air
Воздушный фильтр
Filtru de aer
Filtro de aire
Luftfilter

Code	Model	Pack	Carton
2292.24.02	DEW/DEUCLIMA 24-P	1	1
2293.26.02	DEW/DEUCLIMA 26-S	1	1

056

1614



Variable-flow circulation pump.

Maintenance-free, with threaded connection, ECM technology self-protected synchronous motor.
LED indicator for setting the delivery value and displaying the current consumption in Watts.
Automatic unlocking function.
Function for manual rotor compartment ventilation.

Capacity and pressure adjustment according to the actual system needs.

- PARA 15/7 SC 130 (for Kilma Evo/Econblock control units - Kilma Duplex 150 module w/ integration).
- PARA 25/8 SC 130 (for Kilma Basic - Easy - control unit - Kilma Base 1-2 sub-control unit).
- PARA 25/8 SC 180 (for Kilma Mono-Duplex 150 w/mix - Kilma Duplex 250 w/intergration).
- STRATOS PARA 25/1-8 180 (for Kilma Mono-Duplex 250 modules w/mix).

Variable-flow circulation pump
Pompe de circulation débit variable
Циркуляционный насос с изменяемой пропускной способностью
Pompă de circulație cu debit variabil
Bomba de circulación de caudal variable
Zirkulationspumpe variable Durchflussmenge

Code	Model	Size	Pack	Carton
1614.06.02	1) Para 15/7 SC 130	-	1	1
1614.06.12	2) Para 25/8 SC 130	-	1	1
1614.06.32	3) Para 25/8 SC 180	-	1	1
2257.08.02	4) Stratos Para 25/1-8 180	-	1	1
998.04.00	Fitting pair	1/2"	1	1

high performance circulator EEI<0.23 - (ErP) 622/2012

High energy efficiency.

056

2717



Transparent plastic ring nut for press fitting.

Ring nut for RBM Tita-fix water distribution fitting
Bague pour raccord de distribution eau RBM Tita-fix
Зажим для крепления распределения воды RBM Tita-fix
Inel pentru racordul de distribuție de apă RBM Tita-fix
Virola para racor de distribución de agua RBM Tita-fix
Ring für Wasserverteileranschluss RBM Tita-fix

Code	Size	Pack	Carton
271.70.15	14x2	1	1
272.20.15	16x2	1	1
272.50.15	18x2	1	1
272.90.15	20x2	1	1
290.90.15	26x3	1	1
291.20.15	32x3	1	1
416.20.05	40x3,5	1	1
416.40.05	50x4	1	1
416.60.05	63x4,5	1	1

Ring nut for RBM Tita-gas gas distribution fitting
Bague pour raccord de distribution gaz RBM Tita-gas
Зажим для крепления распределения газа RBM Tita-gas
Inel pentru racordul de distribuție de gaz RBM Tita-gas
Virola para racor de distribución de gas RBM Tita-gas
Ring für Gasverteileranschluss RBM Tita-gas

Code	Size	Pack	Carton
272.20.55	16x2	1	1
272.90.55	20x2	1	1
290.90.55	26x3	1	1
291.20.55	32x3	1	1

056

2718



Stainless steel pipe clamping bush for press fitting.

Stainless steel pipe clamping bush
Bague serre tube en acier inox
Втулка зажима трубы из н/ж стали
Bucșă de strângere a tubului din oțel inoxidabil
Abrazadera para tubos de acero inoxidable
Rohrbuchse aus Edelstahl

Code	Size	Pack	Carton
271.80.04	14x2	1	1
272.30.04	16x2	1	1
272.60.04	18x2	1	1
273.00.04	20x2	1	1
291.00.04	26x3	1	1
291.30.04	32x3	1	1
416.10.05	40x3,5	1	1
416.30.05	50x4	1	1
416.50.05	63x4,5	1	1

056

7362



Swivel joint and hose connection for curved cock code 3255 - 3256.

GS Arno®

Swivel joint and hose connection for curved cock code 3255 - 3256
Rond et porte-caoutchouc pour robinet coudé code 3255 - 3256
Штуцер для шланга для углового крана код 3255 - 3256
Conector rotativ și suport furtun pentru robinet curbat cod. 3255 - 3256
Mando y portagomma para grifo curvado cód. 3255 - 3256
Drehscheibe und Schlauchanschluss für Eckhahn Cod. 3255 - 3256

Code	Size	Pack	Carton
7362.12.00	1/2″	10	10
7362.34.00	3/4″	5	5
7362.10.00	1″	5	5

056

7366



Lever and lock nut for ball valve code 3371 - 3373.

GS Arno®

Lever and lock nut for ball valve code 3371 - 3373
Levier et écrou de blocage pour vanne à bille code 3371 - 3373
Рычаг и блокировочная гайка для шарового крана код 3371 - 3373
Manetă și piuliță de blocare pentru robinetul cu bilă cod. 3371 - 3373
Palanca y tuerca de bloqueo para válvula de bola cód. 3371 - 3373
Hebel und Blockiermutter für Kugelventil Cod. 3371 - 3373

Code	Size	Pack	Carton
7366 14N	1/4″	10	10
7366 38N	3/8″	10	10
7366 12N	1/2″	10	10
7366 34N	3/4″	5	5
7366 10N	1″	5	5
7366 04N	1″1/4	5	5
7366 02N	1″1/2	5	5
7366 20N	2″	5	5
7366 22N	2″1/2	1	1
7366 30N	3″	1	1
7366 40N	4″	1	1

056

7370



Butterfly and lock nut for ball valve code 3372 - 3374.

GS Arno®

Butterfly and lock nut for ball valve code 3372 - 3374
Papillon et écrou de blocage pour vanne à bille code 3372 - 3374
Дроссель с блокировочной гайкой для шарового крана код 3372 - 3374
Fluture și piuliță de blocare pentru robinetul cu bilă cod. 3372 - 3374
Mariposa y tuerca de bloqueo para válvula de bola cód. 3372 - 3374
Flügel und Blockiermutter für Kugelventil Cod. 3372 - 3374

Code	Size	Pack	Carton
7370 14N	1/4″	10	10
7370 38N	3/8″	10	10
7370 12N	1/2″	10	10
7370 34N	3/4″	5	5
7370 10N	1″	5	5
7370 04N	1″1/4	5	5
7370 02N	1″1/2	5	5
7370 20N	2″	5	5

056

7365



Lever and lock nut for curved ball bibcock code 3255.

GS Arno®

Lever and lock nut for curved ball bibcock code 3255
Levier et écrou de blocage pour robinet coudé à bille code 3255
Рычаг и блокировочная гайка для углового шарового крана код 3255
Manetă și piuliță de blocare pentru robinetul cu bilă cod. 3255
Palanca y tuerca de bloqueo para válvula curvada de bola cód. 3255
Hebel und Blockiermutter für Eckkugelhahn Cod. 3255

Code	Size	Pack	Carton
7365 12N	1/2″	10	10
7365 34N	3/4″	10	10
7365 10N	1″	5	5

056

7398



Butterfly and lock nut for curved ball bibcock code 3256.

GS Arno®

Butterfly and lock nut for curved ball bibcock code 3256
Papillon et écrou de blocage pour robinet coudé à bille code 3256
Дроссель с блокировочной гайкой для углового шарового крана код 3256
Fluture și piuliță de blocare pentru robinetul cu bilă curbat cod. 3256
Mariposa y tuerca de bloqueo para grifo curvado de bola cód. 3256
Flügel und Blockiermutter für Eckkugelhahn Cod. 3256

Code	Size	Pack	Carton
7398 12N	1/2″	10	10
7398 34N	3/4″	10	10
7398 10N	1″	5	5

056

7419



Butterfly and lock nut for code 3386.

GS Arno®

Butterfly and lock nut for code 3386
Papillon et écrou de blocage pour code 3386
Дроссель с блокировочной гайкой для код 3386
Fluture și piuliță de blocare pentru cod. 3386
Mariposa y tuerca de bloqueo para cód. 3386
Flügel und Blockiermutter für Cod. 3386

Code	Size	Pack	Carton
7419 12N	1/2″	10	10
7419 34N	3/4″	10	10
7419 10N	1″	5	5

056

2729



Aluminium lever and lock nut for ball valves series RBM NILO and RBM IRO.

RBM Nilo® - Iro®

Black aluminium lever
Levier en aluminium Noir
Рычаг из алюминия черного цвета
Manetă de aluminiu neagră
Palanca de aluminio negra
Schwarzer Alu-Hebel

Code	Size A	Size B	Pack	Carton
27299520	3/8″	3/8″	10	10
27299521	1/2″	1/2″ - 3/4″	10	10
27291120	3/4″ - 1″ - 1″1/4	1″ - 1″1/4	10	10
27291620	1″1/2 - 2″	1″1/2 - 2″	5	5

Red aluminium lever
Levier en aluminium Rouge
Рычаг из алюминия Красного цвета
Manetă de aluminiu roșie
Palanca de aluminio roja
Roter Alu-Hebel

Code	Size A	Size B	Pack	Carton
27299510	3/8″	3/8″	10	10
27299511	1/2″	1/2″ - 3/4″	10	10
27291110	3/4″-1″-1″1/4	1″-1″1/4	10	10
27291610	1″1/2 - 2″	1″1/2 - 2″	5	5

Size A: suitable for RBM NILO series ball valves
Size B: suitable for RBM IRO series ball valves

056

2048



Rubber coated steel lever and lock nut for RBM NILO and RBM IRO series ball valves.

RBM Nilo® - Iro®

Black rubber coated steel lever
Levier en acier revêtement caoutchouc Noir
Рычаг из стали с резиновым покрытием черного цвета
Manetă de oțel acoperită cu cauciuc negru
Palanca de acero revestida con goma negra
Stahlhebel mit schwarzer Gummibeschichtung

Code	Size A	Size B	Pack	Carton
2048.85.20	3/8"	3/8"	10	10
2048.85.21	1/2"	1/2" - 3/4"	10	10
2048.10.20	3/4" - 1" - 1"1/4	1" - 1"1/4	10	10

Red rubber coated steel lever
Levier en acier revêtement caoutchouc Rouge
Рычаг из стали с резиновым покрытием красного цвета
Manetă de oțel acoperită cu cauciuc roșu
Palanca de acero revestida con goma roja
Stahlhebel mit roter Gummibeschichtung

Code	Size A	Size B	Pack	Carton
2048.85.10	3/8"	3/8"	10	10
2048.85.11	1/2"	1/2" - 3/4"	10	10
2048.10.10	3/4" - 1" - 1"1/4	1" - 1"1/4	10	10
2048.15.10	1"1/2 - 2"	1"1/2 - 2"	5	5

Size A: suitable for RBM NILO series ball valves
Size B: suitable for RBM IRO series ball valves

056

2049



Aluminium butterfly and lock nut for RBM NILO and RBM IRO series ball valves.

RBM Nilo® - Iro®

Black aluminium butterfly
Papillon en aluminium Noir
Алюминиевая ручка «бабочка» черного цвета
Fluture de aluminiu negru
Mariposa de aluminio negra
Schwarzer Flügelgriff aus Aluminium

Code	Size A	Size B	Pack	Carton
2049.48.20	3/8"	3/8"	10	10
2049.48.21	1/2"	1/2" - 3/4"	10	10
2049.60.20	3/4"	-	5	5
2049.70.20	1" - 1"1/4	1" - 1"1/4	5	5

Red aluminium butterfly
Papillon en aluminium Rouge
Алюминиевая ручка «бабочка» красного цвета
Fluture de aluminiu roșu
Mariposa de aluminio roja
Roter Flügelgriff aus Aluminium

Code	Size A	Size B	Pack	Carton
2049.48.10	3/8"	3/8"	10	10
2049.48.11	1/2"	1/2" - 3/4"	10	10
2049.60.10	3/4"	-	5	5
2049.70.10	1" - 1"1/4	1" - 1"1/4	5	5

Size A: suitable for RBM NILO series ball valves
Size B: suitable for RBM IRO series ball valves

056

8783



Spacer fitting with chrome-plated plug for recessed shut-off cock.

Spare part for series 20 recessed shut-off cock.

Spacer fitting with cap
Raccord d'entretoise avec capuchon
Дистанционный фитинг с колпаком
Racord distanțier cu capac
Racor distanciador con capucha
Abstandsverbindung mit Kappe

Code	Figure	Pack	Carton
878.30.03	1	1	1
8.60.03	2	10	10

056

3516



056

Extension lead kit for recessed shut-off cock.

Accessory for series 20 recessed shut-off cock.

Extension lead kit for recessed shut-off cock
Kit rallonge pour vanne d'arrêt à encastrer
Комплект удлинителя для встраиваемого стопорного крана
Kit prelungitor pentru robinetul de oprire încastrabil
Kit de prolongación para grifo de bloqueo empotrado
Bausatz Verlängerung für Einbau-Absperrhahn

Code	Size	Figure	Pack	Carton
3516.00.02	30	1	1	1
55.60.04*	25	2	1	1
106.30.04*	35	2	1	1

**only extending the chrome-plated cap*

8780



056

Screw unit for recessed shut-off cock.

Spare part for series 20 recessed shut-off cock.

Screw unit
Groupe vis
Узел кран-букса
Grupul cap cu ventil
Grupo vitón
Einheit Schraube

Code	Size	Figure	Pack	Carton
878.20.05	3/4"	1	1	1
878.30.03	-	1	1	1




General Terms of sale.

Scope

These sales terms apply to all the products shown in the price list sold by R.B.M. spa or by other companies of the R.B.M. Group (hereafter "R.B.M."). Should these terms and conditions not be consistent with the terms and conditions agreed in individual sales contracts concluded between R.B.M. and its customers, the latter will prevail. R.B.M. will not be bound by the customer's general purchase terms (hereafter "CGA") regardless of them being mentioned or included in the orders or in any other documentation coming from the customer, unless expressly accepted in writing by R.B.M.
R.B.M. reserves the right to add, change or eliminate any of the provisions included in these sales terms and these additions, changes or cancellations will apply to all orders made by the customer, starting from the day following the date when the relevant notification concerning the new sales terms was made to him.

Orders

All orders are considered as bookings and do not result in a commitment for R.B.M. to deliver the goods ordered either partially or totally.

Prices

Unless agreed otherwise, the prices valid on the date of the order will apply. The prices refer to goods supplied ex works in Nave. Packaging costs are at the purchaser's expense.

Deliveries

Usual conditions: prompt delivery, if in stock.
Special terms: to be defined from time to time.
The seller is not liable to pay compensation for direct damage resulting from delayed deliveries.

Transport

Goods always travel at the purchaser's risk even when they are delivered carriage free to their destination according to special agreements.

Payments

Unless agreed otherwise, payments are considered as settled on the date of receipt of the invoice. Payments are due within the deadlines agreed, even when the goods arrive late and in the case of malfunctioning, partial and total loss during transport and when the purchaser does not collect the goods for which collection on his side has been agreed. In the case of non-payment, 10 days after the submittal of the invoice or after the deadline established, the seller will be entitled to issue a sight draft and to debit the relevant costs. Furthermore, after the deadline established has been exceeded, interest will be calculated at the rate established in Decree Law 231/2002.

Tolerances

Wear tolerances both on finished products and on their individual elements they consist of, are admitted.

Suspension of orders

45 days after the delivery date established has been exceeded the purchaser will be entitled to request the cancellation of the order. The relevant notification must be made by registered letter and no rights will arise from the cancellation.
If the seller establishes that the purchaser has difficulties settling payments, he/she will be entitled to suspend or delay further deliveries after the agreed payment deadlines.

Returns

Returns will be accepted only with our prior authorization and must be carriage free.

Complaints and Claims

Complaints concerning the quantity or quality of the goods supplied must be notified by the purchaser to the seller within 8 days after receiving the goods.

Modifications

R.B.M. reserves the right to make all the changes it may deem necessary to the Products without prior notice.

Applicable law and Jurisdiction

The sales terms and each individual sales contract will be regulated and interpreted according to Italian Law, unless otherwise agreed in writing between R.B.M. and the Customer.
All disputes resulting from or connected with, these sale terms and/or individual sales contracts are subject to the exclusive jurisdiction of the Court of Brescia.
However, R.B.M. reserves the right to start legal action also as plaintiff in the customer's country, either in Italy or abroad.

R.B.M. spa

Quality certificate.

At R.B.M. raw materials undergo rigorous checks. We guarantee a careful product selection and use cutting-edge manufacturing techniques..

DURATION

R.B.M. is liable for the system for **10 years** from its sale.
The replacement or repair of the Product or of one of its components does not extend the duration, which remains unchanged.

THE SERVICE PROVIDED BY R.B.M.

The service covers the damages that R.B.M. is required to pay for compensation as civilly liable by law for material damage and/or bodily harm accidentally caused to third parties due to a defect of the products, after their delivery to third parties and thereby benefiting from third-party liability insurance on products with a limit of **€10m** for each damage and per year. Expenses for product replacements and repairs, costs for inquiries by anyone not authorised beforehand by RBM, property damage deriving from non-compliance of the product with its intended use, damage caused by the infringement of patents and/or trademarks, and penalties are excluded.

LIABILITY OPERABILITY AND EFFECT

An essential condition is to ensure that the installation of the product has been carried out according to the provisions for the design, installation and operation of the system, which must be installed by a specialised heating and plumbing installer. Furthermore, the product must be installed in accordance with applicable laws and the highest professional standards and the installer must provide a system certification. Finally, the instructions and warnings for the use and maintenance of the system must be complied with.

EXCLUSIONS

R.B.M. shall not be liable in case of damage or malfunctions that are due, among other reasons, to facts and faults not attributable to the manufacturer and in any case to the following causes:

- use of non-original parts and/or products and/or components and accessories or not recommended by R.B.M.;
- failure to comply with rules, regulations, use;
- installation defects or failure to take the necessary precautions to ensure execution to a professional standard;
- maintenance defects, negligence and careless use;
- failure to comply with the instructions and warnings provided by R.B.M. and/or by the installer;
- tampering, maintenance in general, work by unauthorised personnel;
- anomalous use, use of aggressive liquids or otherwise unsuitable for correct storage and use;
- damage caused by incorrect or avoidable work in the attempt to remedy the defect;
- anomalies or malfunction of non-R.B.M components;
- corrosion, encrustations or failures caused by stray currents, condensation, aggressive or acid water, descaling treatments carried out incorrectly, lack of water, sludge deposits or limescale;
- accidents, force majeure such as frost, overheating, fires, natural events (hail, tornadoes, lightning, floods, earthquakes), etc.;
- hydraulic and/or electrical systems that do not comply with current standards.

Technical work to eliminate the above defects and resulting damage must be agreed with R.B.M., which reserves the right to accept or refuse the assignment. In any case, it must be specifically agreed upon and according to the workers or best rates or quotes for the work to be carried out.

Nave, il 01/02/2018

R.B.M. spa
Un Amministratore

R.B.M. spa
COMPONENTI PER IMPIANTI IDROTERMICI
Via S. Giuseppe, 1 - 25075 Nave - (BS) Italy - Tel. 030 2537211 - Fax 030 2532780
info@rbm.eu - www.rbm.eu

RBM'S WORLD

RBM Brass

COMPONENTS FOR PLUMBING AND HEATING SYSTEMS

RBM Kilma

RADIANT HEATING AND COOLING SYSTEMS

RBM Metis

HEATING METERING CONSUMPTION SYSTEMS

RBM Tita-Fix

HYDROTERMAL AND GASEOUS FUELS
DISTRIBUTION SYSTEMS

RBM Sferika

BALL VALVES AND CHECK VALVES